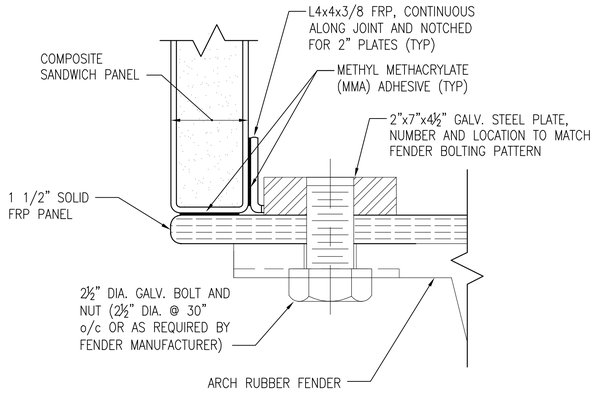

DETAIL 1
3" = 1'-0" S-502

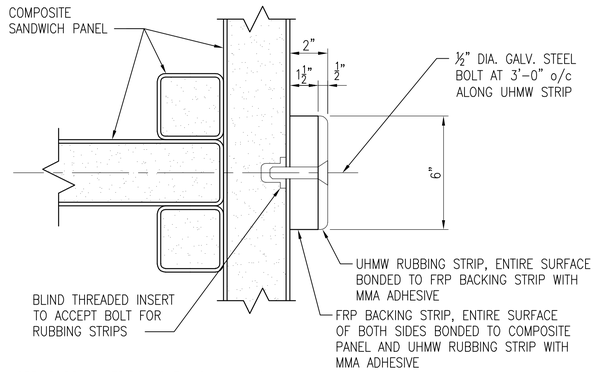

NOTE: RUBBING STRIPS CONTINUOUS ALONG LENGTH OF CAMEL. DOUBLE STRIPS AT LOCATIONS INDICATED ON SECTIONS.

DETAIL 2
3" = 1'-0" S-503,S-504

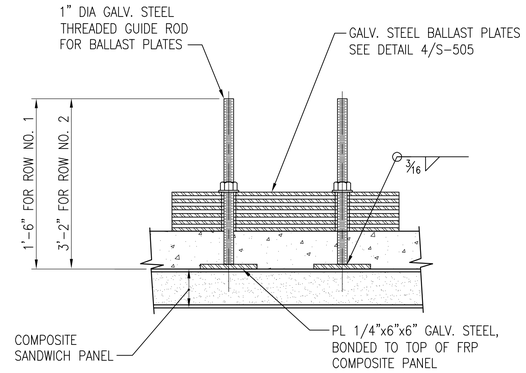

DETAIL 3
1 1/2" = 1'-0" S-504

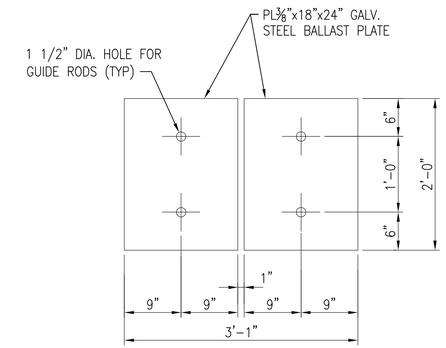

DETAIL 4
1" = 1'-0" S-505

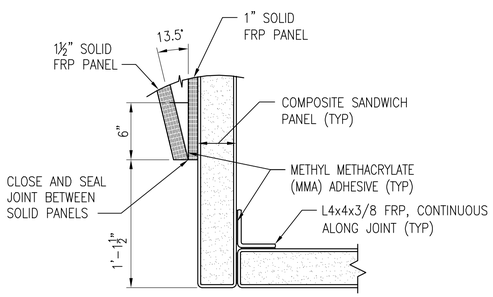

DETAIL 5
1 1/2" = 1'-0" S-504

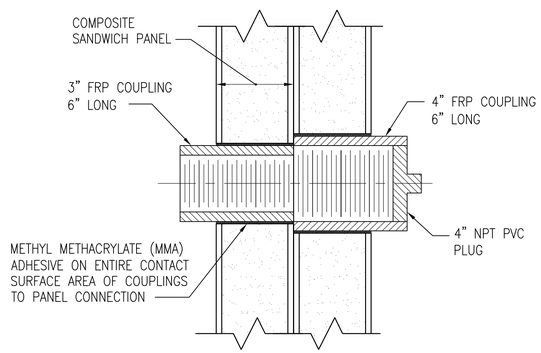

DETAIL 6
3" = 1'-0" S-502,S-503,S-504

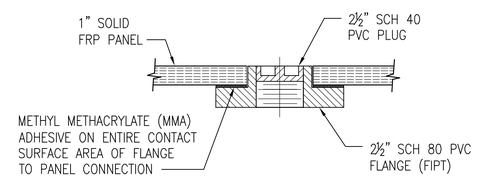

DETAIL 7
3" = 1'-0" S-501

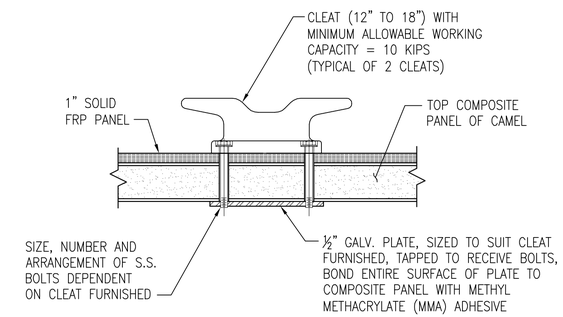

DETAIL 8
1 1/2" = 1'-0" S-502,S-504

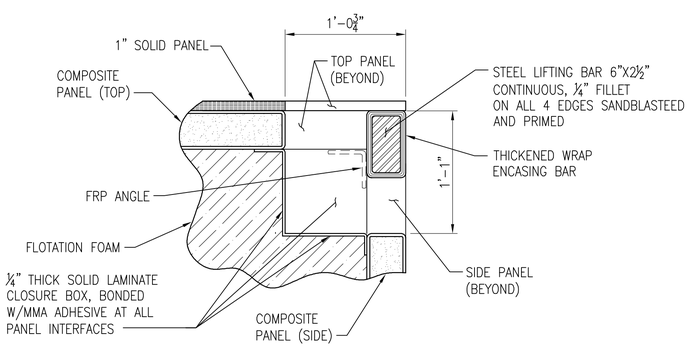

DETAIL 9
1 1/2" = 1'-0" S-503

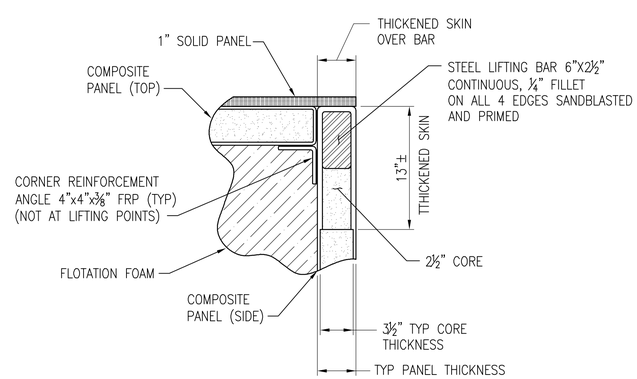

SECTION 10
1 1/2" = 1'-0" S-501

GRAPHIC SCALES

0 6" 1' 2'
SCALE: 1" = 1'-0"

0 4" 8" 16"
SCALE: 1 1/2" = 1'-0"

0 2" 4" 8"
SCALE: 3" = 1'-0"

SYM	DESCRIPTION	DATE	APPR

NAVFAC

Composite Advantage

WR&A
801 South Caroline Street, Baltimore, MD 21231
WHITMAN, REQUARDT & ASSOCIATES, LLP
A/E INFO

SEAL

APPROVED

FOR COMMANDER NAVFAC

ACTIVITY

SATISFACTORY TO DATE

DES: MHL DRW: MHL CHK: JBS

PM/DM

BRANCH MANAGER

CHIEF ENG/ARCH

FIRE PROTECTION

DEPARTMENT OF THE NAVY
NAVAL FACILITIES ENGINEERING COMMAND
NAVFAC LANT

COMPOSITE SUBMARINE CAMEL

DETAILS

SCALE: AS NOTED

EPROJECT NO.:

CONSTR. CONTR. NO.
N66540-09-C-0029

NAVFAC DRAWING NO.
14019615

SHEET 9 OF 9

S-505

DRAWFORM REVISION: 10 MARCH 2009

FILE NAME: N:\81354-001\CADD\UCSC0001-00029-S505.dwg LAYOUT NAME: Layout1 PLOTTED: Tuesday, February 22, 2011 - 3:49pm USER: mlambros