UFM 3-550-07
12 March 2026

UNIFIED FACILITIES MANUAL (UFM)

OPERATION AND MAINTENANCE (O&M): EXTERIOR POWER DISTRIBUTION SYSTEMS

APPROVED FOR PUBLIC RELEASE; DISTRIBUTION UNLIMITED

FOREWORD

Unified Facilities Manuals (UFM) provide non-mandatory, informational guidance in support of Unified Facilities Criteria (UFC) with a specific focus on facilities operations, and maintenance. Only UFC establish enforceable requirements. UFM are For Information Only (FIO) and exist to help users understand and apply UFC requirements.

The purpose of UFM is to share operational procedures, maintenance practices, and practical examples that support effective implementation of UFC criteria during operations and maintenance activities. UFM may include recommended procedures, checklists, illustrations, or explanatory material, but they do not create new requirements, modify UFC content, or establish mandatory standards.

UFM are developed by Discipline Working Groups (DWGs) and published by the Military Services under MIL-STD-3007. Because they are not criteria, they do not require Coordinating Panel (CP) or Engineering Senior Executive Panel (ESEP) approval.

UFM content may be referenced or incorporated into operations, maintenance, or project documentation at the discretion of project delivery teams, but it is not binding unless explicitly included in contract requirements.

UNIFIED FACILITIES MANUAL (UFM)

OPERATION AND MAINTENANCE (O&M): EXTERIOR POWER DISTRIBUTION SYSTEMS

TABLE OF CONTENTS

CHAPTER 1 INTRODUCTION 1
1-1 BACKGROUND. 1
1-2 PURPOSE AND SCOPE. 1
1-3 APPLICABILITY. 1
1-4 GENERAL BUILDING REQUIREMENTS. 2
1-5 SAFETY. 2
1-5.1 Minimizing Hazards. 2
1-5.2 Qualifications of Electrical Workers. 2
1-5.3 Certification of Electrical Workers. 2
1-5.4 Public Safety. 3
1-5.5 Personnel Safety. 3
1-6 CYBER SECURITY. 4
1-7 REFERENCES. 4
1-8 GLOSSARY. 4
CHAPTER 2 SYSTEM CONFIGURATIONS. 5
2-1 DISTRIBUTION SYSTEM CONFIGURATIONS. 5
2-1.1 Radial Feed. 5
2-1.2 Loop Feed. 6
2-2 SUBSTATION CONFIGURATIONS. 7
2-2.1 Double Feed, Double Bus. 7
2-2.2 Straight Bus. 8
2-2.3 Ring Bus. 9
2-2.4 Breaker-and-a-Half. 10
2-2.5 Network Model. 11
CHAPTER 3 DEVELOPING AN O&M PROGRAM 13
3-1 TRAINING. 13
3-1.1 Qualifications of Test Operators. 13

3-1.2 Electric Workers, Instruments, and Reports. 13
3-1.3 Testing Agency Qualifications. 13
3-2 TOOLS AND EQUIPMENT. 14
3-2.1 Electrical Tools and Equipment Standards. 14
3-2.2 Standard Tools and Equipment. 14
3-2.3 Specialty Tools and Equipment. 15
3-2.4 Care and Storage of Tools and Equipment. 16
3-2.5 Electrical Inspecting and Testing Equipment. 16
3-3 HAZARDOUS MATERIAL PROCEDURES. 17
3-4 SYSTEM DATA, EQUIPMENT DATA, AND DOCUMENTATION. 17
3-5 TESTING INTERVALS. 18
3-6 RISK MANAGEMENT ANALYSIS. 18
3-7 RELIABILITY AND AVAILABILITY. 19
3-8 LIFE CYCLE COST ANALYSIS. 19
3-9 RECORD DOCUMENTS - MANUALS, DIAGRAMS AND DRAWINGS. 20
3-9.1 Operation and Maintenance (O&M) Manuals. 20
3-9.2 Electrical Drawings. 20
3-9.3 Operating Instructions, Records, and Logs. 21
3-9.4 Geospatial Information Systems. 21
3-10 ENERGIZED WORK PROCEDURES. 22
3-10.1 Work on Energized Circuits. 22
3-10.2 Unique Procedures for an Energized Work Permit. 22
3-11 LOCKOUT/TAGOUT PROCEDURES. 22
3-12 CONFIRMATION OF ADEQUATE MAINTENANCE AND TESTING. 22
3-12.1 Calibration Sticker Classification Codes. 23
3-12.2 Test Reports. 23
CHAPTER 4 OPERATION. 25
4-1 DEMAND LOAD. 25
4-1.1 Characteristics – Residential, Commercial, Industrial. 25
4-1.2 Seasonal Behavior – Power Demand. 25
4-1.3 Circuits with Minimal Seasonal Behavior. 27
4-1.4 Metering Data as an Input to System Operation. 27

4-1.5 Load Shifting. 28
4-1.6 Peak Shaving/Load Shedding. 28
4-1.7 Coincidence. 29
4-1.8 Trend Analysis. 29
4-1.9 Forecasting and Planning. 30
4-1.10 Demand Management. 31
4-2 RECLOSING PRACTICES AND FUSE SAVING. 32
4-2.1 Reclosing Initiated at Substation or Switching Station Circuit Breakers. 33
4-2.2 Reclosing Initiated at Downstream Pole- or Pad-Mounted Reclosers. 33
4-2.3 Maintenance Practices to Minimize Reclosing Events. 34
4-3 POWER FACTOR CORRECTION. 35
4-3.1 Power Factor Variation. 35
4-3.2 Power Factor Evaluation. 36
4-3.3 Operation. 37
4-3.4 Automatic Operation. 37
4-4 DISTRIBUTED GENERATION. 37
CHAPTER 5 MAINTENANCE, INSPECTION, TESTING AND REPAIR 38
5-1 SYSTEM COMPONENTS AND MINIMUM REQUIREMENTS. 38
5-1.1 Substations. 38
5-1.2 Power Transformers Recommended Intervals and Requirements. 39
5-1.3 Switching Equipment. 41
5-1.4 Tap Changers/Voltage Regulators. 44
5-1.5 Relays, Instruments and Controls. 47
5-1.6 Stationary Batteries and Battery Chargers. 50
5-1.7 Instrument Transformers. 55
5-1.8 Capacitors and Inductors. 56
5-1.9 Insulators. 56
5-1.10 Bushings. 56
5-1.11 Bus Structures. 57
5-1.12 Terminations. 57
5-1.13 Grounding. 58

5-1.14 Fences. 58
5-1.15 Lightning Protection. 60
5-1.16 Structure Maintenance / Corrosion Control. 63
5-1.17 Substation Yards. 65
5-1.18 Wildlife Deterrents. 65
5-1.19 Frequency Converters (Motor-Generator (MG) Sets) and Synchronous Condenser. 65
5-2 MEDIUM VOLTAGE (MV) DISTRIBUTION. 66
5-2.1 Overhead Distribution. 66
5-2.2 Underground. 72
5-2.3 Ground Systems. 77
5-2.4 Metering. 77
5-2.5 Animal Control. 77
5-3 ROADWAY/STREET/PARKING AREA LIGHTING. 78
5-3.1 Voltage Level. 78
5-3.2 Clearance Requirements. 78
5-3.3 Multiple Street Lighting Circuits. 78
5-3.4 Series Street Lighting Circuits. 78
5-3.5 Climbing Space. 79
5-3.6 Time Switches. 79
5-4 DISTRIBUTED GENERATION. 79
CHAPTER 6 WORKING ON OVERHEAD DISTRIBUTION 80
6-1 OVERHEAD DISTRIBUTION WORK. 80
6-1.1 Working in Elevated Positions. 80
6-1.2 Qualified Climber. 80
6-1.3 Criteria for Qualified Climbers. 80
6-2 POLE HANDLING OPERATIONS. 81
6-2.1 General. 81
6-2.2 Pole Contact Precautions. 81
6-2.3 Receiving Pole Shipment. 82
6-2.4 Ground Handling. 83
6-2.5 Long Term Pole Storage. 83

6-2.6 Temporary Pole Storage. 84
6-2.7 Hauling Poles. 84
6-3 POLE INSTALLATION, REPLACEMENT, AND REMOVAL. 84
6-3.1 Pole Holes. 85
6-3.2 Digging Holes. 85
6-3.3 Covering a Hole. 85
6-3.4 Hole Casings. 85
6-3.5 Setting Poles. 85
6-3.6 Pole Setting Trucks. 89
6-3.7 Setting Poles in Energized Lines. 89
6-3.8 Backfilling the Hole. 89
6-3.9 Dismantling Poles. 89
6-4 CLIMBING AND WORKING ON POLES. 90
6-4.1 General Rules. 91
6-4.2 Pole Inspection Before Climbing. 91
6-5 POLE CLIMBING EQUIPMENT. 93
6-5.1 General Rules. 93
6-5.2 Wooden Pole Climbing Equipment. 94
6-5.3 Concrete and Steel Pole Climbing. 99
6-6 POLE CLIMBING AND WORK PRECAUTIONS. 100
6-6.1 General Pole Climbing Precautions. 100
6-6.2 Wooden Pole Climbing Precautions. 101
6-6.3 Concrete and Steel Pole and Tower Climbing Precautions. 101
6-6.4 Working on Poles. 102
6-6.5 Safety Straps. 102
6-6.6 Hoisting or Lowering Materials. 103
6-7 CROSSING STRUCTURES. 103
6-8 STRINGING OR REMOVING DE-ENERGIZED CONDUCTORS AND OVERHEAD GROUND WIRES. 103
6-8.1 Pre-Work Meeting. 103
6-8.2 Work Adjacent to Energized Lines. 103
6-8.3 Grounding. 105

6-8.4 Handling and Stringing. 105
6-8.5 Clipping-In or Tying Wires. 106
6-8.6 Secondary Line Installation. 106
6-8.7 Removing Lines. 107
6-8.8 Guying. 107
6-8.9 Insulators. 108
6-9 ENERGIZED WORK. 108
6-10 WORKING ON OR NEAR POLE-MOUNTED EQUIPMENT. 108
6-10.1 Surge Arresters. 109
6-10.2 Switches and Fuses. 109
6-10.3 Capacitors. 109
6-10.4 Power Transformers and Voltage Regulators. 109
6-10.5 Fuses. 110
6-10.6 Service Wires. 110
6-10.7 Testing. 111
6-11 AERIAL ROPE. 111
6-11.1 Conductivity. 111
6-11.2 Terminology of Rope Use. 111
6-11.3 Knots and Splices. 112
6-11.4 Hand Line and Rope Line Precautions. 112
6-11.5 Tackle Blocks. 113
6-12 TOOLS. 113
6-12.1 Portable Power Tool Precautions. 113
6-12.2 Miscellaneous Tool Precautions. 113
6-13 AERIAL LIFTS AND INSULATED BUCKETS. 114
6-13.1 Types of Aerial Lifts. 114
6-13.2 Aerial Ladder. 114
6-13.3 Insulating Versus Non-Insulating. 115
6-13.4 General Requirements. 119
6-13.5 Training. 121
6-13.6 Driving Precautions. 121
6-13.7 Setting Up and Knocking Down at the Job Site. 121

6-13.8 Operating at the Job Site. 122
6-13.9 Aerial Lift Equipment Operation near Energized Electrical Equipment. 124
6-14 TREE TRIMMING AND BRUSH REMOVAL. 124
6-14.1 Training Qualifications. 125
6-14.2 Public Safety. 125
6-14.3 Tool Safety. 125
6-14.4 Work Near Energized Lines. 125
6-14.5 Climbing and Working on Trees. 125
6-14.6 Felling Trees. 126
6-14.7 Power Trimming Equipment. 126
6-14.8 Right-Of-Way Brush Removal. 127
6-15 WORKING NEAR COMMUNICATIONS ANTENNAS. 127
CHAPTER 7 OUTAGES 128
7-1 TROUBLESHOOTING AND FAULT DETECTION METHODS. 128
7-2 FAULT ANALYSIS. 129
7-3 DOCUMENTING/REPORTING. 130
7-4 SCHEDULING AND PLANNING. 131
CHAPTER 8 POWER SYSTEM STUDIES AND COMPUTER MODELS 133
8-1 TOOLS, DATA AND DEVELOPMENT. 133
8-1.1 General Process. 133
8-1.2 UFC 3-501-01 Requirements. 133
8-1.3 Software Requirements. 134
8-1.4 Periodic Updates. 134
8-2 MODELING. 135
8-2.1 Equipment Naming Conventions. 135
8-2.2 Equipment Modeling. 135
8-3 POWER FLOW. 137
8-3.1 Overview. 137
8-3.2 Metering Data. 137
8-3.3 System Electrical Measurements. 138
8-3.4 Power Flow Analysis. 138

8-3.5 Cross-Connect Analysis. 139
8-4 SHORT CIRCUIT ANALYSIS. 139
8-4.1 Overview. 139
8-4.2 Short Circuit Results. 140
8-4.3 Equipment Duty Evaluation. 140
8-5 ARC FLASH ANALYSIS. 140
8-5.1 Analysis Criteria. 140
8-5.2 Arc Flash Labels. 140
8-5.3 Maintenance and Testing Requirements. 141
8-6 ELECTRICAL COORDINATION. 141
8-6.1 Overview. 141
8-6.2 Coordination System Study Documentation and Criteria. 141
8-6.3 Coordination System Study – Substations and Switching Stations. 144
8-6.4 Circuit Breaker Instantaneous Trips. 144
8-6.5 Feeder Circuit Breaker Relay Settings for Underground Distribution. 145
8-7 AURORA ANALYSIS. 145
CHAPTER 9 POWER AVAILABILITY/RELIABILITY/RESILIENCY 147
9-1 METRICS. 147
9-2 POWER QUALITY. 147
9-2.1 Monitoring. 147
9-2.2 Harmonics. 147
9-2.3 Voltage Unbalance. 148
9-2.4 Phase Current Imbalance. 149
9-3 PERFORMANCE AND EVALUATION. 149
9-4 PREDICTIVE ANALYSIS. 150
CHAPTER 10 PHYSICAL SECURITY 151
10-1 PHYSICAL SECURITY. 151
10-2 LESSONS LEARNED. 151
APPENDIX A REFERENCES 152
APPENDIX B IEEE COLOR BOOKS 159
APPENDIX C PRIMARY DISTRIBUTION SYSTEM FUSING 164
C-1 OVERHEAD DISTRIBUTION FUSING. 164

C-2 PAD-MOUNTED SWITCHGEAR FUSING. 171
APPENDIX D VACUUM FAULT INTERRUPTER (VFI) TRIP SETTINGS 177
D-1 GENERAL CRITERIA. 177
D-2 S&C VISTA PAD-MOUNTED SWITCHGEAR. 178
D-3 G&W VFI PAD-MOUNTED SWITCHGEAR. 184
D-4 COOPER VFI PAD-MOUNTED SWITCHGEAR. 190
D-4.1 Overview. 190
D-4.2 Trip Unit Characteristics. 191
D-4.3 Example Trip Settings. 193
D-4.4 Recommended Settings. 194
D-5 COMPARISON OF S&C, COOPER, AND G&W TRIP SETTINGS. 199
APPENDIX E STANDARD OPERATING PROCEDURES FOR ENERGIZED WORK PERMITS 201
E-1 OVERVIEW. 201
E-1.1 OSHA Criteria. 201
E-1.2 SOP Limitations. 201
E-1.3 Items to Address in an SOP. 201
E-2 SAMPLE SOP – FUSED CUTOUTS: OPENING, CLOSING, OR REPLACING FUSES. 203
E-3 SAMPLE SOP – CONNECTING/DISCONNECTING LOADBREAK ELBOWS. 210
APPENDIX F SAMPLE MAINTENANCE PROGRAM CHECKLISTS 218
APPENDIX G SAMPLE LIFE CYCLE COST MAINTENANCE WORKSHEET 220
APPENDIX H SAMPLE MAPCO MAINTENANCE DOCUMENT 221
APPENDIX I RECOMMENDED TESTING INTERVALS 222
APPENDIX J GLOSSARY 225
J-1 ACRONYMS 225
J-2 DEFINITION OF TERMS 227

FIGURES

Figure 2-1 Radial Feed 5
Figure 2-2 Primary Loop System 6
Figure 2-3 Double Feed, Double Bus System 7
Figure 2-4 Straight Bus System 8
Figure 2-5 Ring Bus System 9
Figure 2-6 Breaker and a Half System 10
Figure 2-7 Network Model 12
Figure 4-1 Power Demand Variation – Northern Base 25
Figure 4-2 Power Demand Variation – Southern Base Demand 26
Figure 4-3 Daily Power Demand Variation 26
Figure 4-4 Data Center Power Demand Variation 27
Figure 4-5 Typical Recloser Control Unit Settings 34
Figure 4-6 Typical Power Factor Variation 36
Figure 6-1 Pike Pole Method 87
Figure 6-2 Winch Line Method 88
Figure 6-3 Honing a Gaff 97
Figure 8-1 Aurora Vulnerability Assessment Flowchart 146
Figure C-1 Various Fuse Link Type Time-Current Response 170
Figure D-1 S&C Vista Switchgear 179
Figure D-2 G&W VFI Switchgear 185
Figure D-3 Cooper VFI Switchgear 191
Figure D-4 Factory Default Settings 193
Figure D-5 Example Tri-Phase Trip Settings – Higher Trip Values 194
Figure D-6 Comparison of S&C Vista and G&W Switchgear VFI Settings 200

TABLES

Table 3-1 Availability and Downtime 19
Table 5-1 Electromechanical Relay Test Intervals 49
Table 5-2 Electronic Relay Test Intervals 49
Table 5-3 Qualified Worker Minimum Approach Distances – DC Systems 51
Table 5-4 Arc Flash PPE Categories for DC Systems 51
Table 5-5 Battery Monitor System Maintenance 58
Table 5-6 Time-Based Preventive Tests 73
Table 5-7 Time-Based Predictive Tests 74
Table 6-1 Average Crew Size Required to Raise Poles by Piking 86
Table 6-2 In-Use Check of Pole Climber Gaffs 98
Table 6-3 Insulating Device Categories 115
Table 6-4 Application and Uses of Aerial Devices 116
Table 6-5 Periodic Electrical Test Values for Insulating Aerial Devices with a Lower Test Electrode System (Category A and Category B) 117
Table 6-6 Insulating Aerial Devices without Lower Test Electrode System (Category C) 118

Table 6-7 Insulating Aerial Ladders and Insulating Vertical Aerial Towers 118
Table 6-8 In Field Tests for Insulating Aerial Devices – ANSI/SIA A92.2 Section 5.4.3.2 Item 10(c) 118
Table 8-1 Electrical Protection and Coordination Criteria 143
Table B-1 IEEE Color Books 159
Table B-2 IEEE 3000 Standards Collection 160
Table C-1 Type K or T Fuse Link Sizing for Individual Transformers – 2.4 kV 165
Table C-2 Type K or T Fuse Link Sizing for Individual Transformers – 4.16 kV 165
Table C-3 Type K or T Fuse Link Sizing for Individual Transformers – 11 kV 166
Table C-4 Type K or T Fuse Link Sizing for Individual Transformers – 11.5 kV 166
Table C-5 Type K or T Fuse Link Sizing for Individual Transformers – 12.47 kV 167
Table C-6 Type K or T Fuse Link Sizing for Individual Transformers – 13.2 kV 167
Table C-7 Type K or T Fuse Link Sizing for Individual Transformers – 13.8 kV 168
Table C-8 Type K or T Fuse Link Sizing for Individual Transformers – 22 kV 168
Table C-9 Fuse Link Sizing for Individual Transformers – 34.5 kV 169
Table C-10 Type H or QA Fuse Link Sizing for Individual Transformers – 12.47 kV ... 169
Table C-11 Fuse Sizing for Individual Transformer Primary Protection – 2.4 kV 172
Table C-12 Fuse Sizing for Individual Transformer Primary Protection – 4.16 kV 172
Table C-13 Fuse Sizing for Individual Transformer Primary Protection – 11 kV 173
Table C-14 Fuse Sizing for Individual Transformer Primary Protection – 11.5 kV 173
Table C-15 Fuse Sizing for Individual Transformer Primary Protection – 12.47 kV 174
Table C-16 Fuse Sizing for Individual Transformer Primary Protection – 13.2 kV 174
Table C-17 Fuse Sizing for Individual Transformer Primary Protection – 13.8 kV 175
Table C-18 Fuse Sizing for Individual Transformer Primary Protection – 22 kV 175
Table C-19 Fuse Sizing for Individual Transformer Primary Protection – 34.5 kV 176
Table D-1 S&C VFI Settings to Provide Primary Protection for Individual Transformers – 2.4 kV 180
Table D-2 S&C VFI Settings to Provide Primary Protection for Individual Transformers – 4.16 kV 180
Table D-3 S&C VFI Settings to Provide Primary Protection for Individual Transformers – 11 kV 181
Table D-4 S&C VFI Settings to Provide Primary Protection for Individual Transformers – 11.5 kV 181
Table D-5 S&C VFI Settings to Provide Primary Protection for Individual Transformers – 12.47 kV 182
Table D-6 S&C VFI Settings to Provide Primary Protection for Individual Transformers – 13.2 kV 182
Table D-7 S&C VFI Settings to Provide Primary Protection for Individual Transformers – 13.8 kV 183
Table D-8 S&C VFI Settings to Provide Primary Protection for Individual Transformers – 22 kV 183
Table D-9 S&C VFI Settings to Provide Primary Protection for Individual Transformers – 34.5 kV 184
Table D-10 G&W VFI Settings to Provide Primary Protection for Individual Transformers – 2.4 kV 186

Table D-11 G&W VFI Settings to Provide Primary Protection for Individual Transformers – 4.16 kV 186
Table D-12 G&W VFI Settings to Provide Primary Protection for Individual Transformers – 11 kV 187
Table D-13 G&W VFI Settings to Provide Primary Protection for Individual Transformers – 11.5 kV 187
Table D-14 G&W VFI Settings to Provide Primary Protection for Individual Transformers – 12.47 kV 188
Table D-15 G&W VFI Settings to Provide Primary Protection for Individual Transformers – 13.2 kV 188
Table D-16 G&W VFI Settings to Provide Primary Protection for Individual Transformers – 13.8 kV 189
Table D-17 G&W VFI Settings to Provide Primary Protection for Individual Transformers – 22 kV 189
Table D-18 G&W VFI Settings to Provide Primary Protection for Individual Transformers – 34.5 kV 190
Table D-19 Cooper VFI Settings to Provide Primary Protection for Individual Transformers – 2.4 kV 194
Table D-20 Cooper VFI Settings to Provide Primary Protection for Individual Transformers – 4.16 kV 195
Table D-21 Cooper VFI Settings to Provide Primary Protection for Individual Transformers – 11 kV 195
Table D-22 Cooper VFI Settings to Provide Primary Protection for Individual Transformers – 11.5 kV 196
Table D-23 Cooper VFI Settings to Provide Primary Protection for Individual Transformers – 12.47 kV 196
Table D-24 Cooper VFI Settings to Provide Primary Protection for Individual Transformers – 13.2 kV 197
Table D-25 Cooper VFI Settings to Provide Primary Protection for Individual Transformers – 13.8 kV 197
Table D-26 Cooper VFI Settings to Provide Primary Protection for Individual Transformers – 22 kV 198
Table D-27 Cooper VFI Settings to Provide Primary Protection for Individual Transformers – 34.5 kV 198
Table E-2-1 Qualified Worker Minimum Approach Distances – AC Systems 206
Table E-3-1 Qualified Worker Minimum Approach Distances – AC Systems 213
Table E-3-2 Rubber Insulating Equipment Voltage Requirements 214

CHAPTER 1 INTRODUCTION

1-1 BACKGROUND.

This UFM updates the requirements of and replaces AFJMAN 32-1082 /TM 5-684 /MO-200, and AFH 32-1282 V1 & V2.

1-2 PURPOSE AND SCOPE.

This UFM provides guidance for operations and maintenance of electrical power and distribution systems. Electrical systems need regular maintenance to ensure continued compliance with the codes and publications referred to in this document. Such maintenance will prevent system and equipment failures and ensure maximum safety and efficiency in the utilization of the facilities. At each installation, establish a program for proper maintenance and effectively follow it. Include in this program the scope of work, intervals of performance, and methods of application including safety requirements, practices and procedures, and operations and maintenance (O&M) of electrical power and distribution systems.

The information provided applies to the plans and procedures to operate and maintain installation electrical distribution systems. Specific installation conditions may dictate the need for procedures that exceed these minimum requirements.

These systems include substations, overhead and underground electrical distribution systems, exterior lighting systems, and electrical apparatus and components. Guidance for generators is covered in the following publications:

- UFC 3-540-01;
- UFM 3-540-07; and
- UFC 3-520-01.

1-3 APPLICABILITY.

The guidance and standards contained within are the minimum requirements acceptable for military installations for efficiency, economy, durability, maintainability, and reliability of electrical power supply and distribution systems. The provided guidance does not automatically supersede equipment manufacturers' instructions and requirements. When conflicts exist, follow the most rigorous requirement. The guidance and standards herein are not intended to be retroactively mandatory. Provide, as a minimum, the level of maintenance required to meet the critical mission reliability goals.

- Comply with the requirements of Occupational Safety and Health (OSHA), General Industry Standards, and 29 CFR 1910;

- Comply with UFC 3-550-01 for minimum system and component design standards;
- Comply with UFM 3-560-01 for electrical safety requirements applicable to the installation and operation of electrical systems;
- Comply with UFC 4-010-01 and UFC 4-020-01 for security requirements related to exterior electrical distribution systems; and
- Comply with UFM 3-540-07 for operations and maintenance (O&M) of generators.

Note: for privatized utilities, this UFM is for guidance only and compliance is not mandatory.

1-4 GENERAL BUILDING REQUIREMENTS.

Comply with UFC 1-200-01. UFC 1-200-01 provides applicability of model building codes and government unique guidance for typical design disciplines and building systems, as well as for accessibility, antiterrorism, security, high performance and sustainability requirements, and safety.

1-5 SAFETY.

Safety must always be top priority when working on or near any piece of electrical equipment. The electrical safety requirements for all electrical work activities on DoD utilities are provided in UFM 3-560-01, which provides implementation criteria for the various regulations, codes, and standards that apply to electrical safety activities.

Note: For Army installations, also comply with Army Pamphlet DA PAM 385-26.

1-5.1 Minimizing Hazards.

Material specifications, construction guidance, installation standards, material procedures, and safe working procedures have been developed to minimize hazards. Ensure all work and materials conform to the latest accepted procedures and standards, as defined in publications listed or referred to in this manual.

1-5.2 Qualifications of Electrical Workers.

Due to the inherent hazards encountered in the maintenance of electrical distribution systems and equipment, it is essential that all electrical workers be thoroughly trained and be familiar with the equipment and procedures to be followed.

1-5.3 Certification of Electrical Workers.

Properly trained electric workers will be certified in accordance with applicable publications.

1-5.4 Public Safety.

All necessary precautions will be taken to warn the public of electrical hazards or other conditions which may constitute a danger. This is especially true of temporary hazards due to work in progress.

1-5.5 Personnel Safety.

Any work on or close to electrical equipment of any kind is considered dangerous and proper safety precautions will be taken. All personnel who perform work of any kind on or near electrical equipment must be familiar with and observe all safety precautions. If an agency has a detailed labeling program or reliability program, comply with its requirements.

1-5.5.1 Safety First.

Two safety rules are mandatory as follows:

- Consider all electrical equipment is energized until it is known positively under LOCKOUT/TAGOUT (as by the presence of grounding clamps) that it is not energized. Comply with UFM 3-560-01, the applicable departmental publications, and special publications issued by the local command; and

- Work may be done only by personnel qualified by their job descriptions for that voltage level. Job descriptions to require actual hands-on work service periods to meet local utility approval. All tools and equipment must be maintained in proper operating order, be suitable for the maximum voltage level involved, and be periodically tested for compliance with all safety requirements. Consult departmental publications for specific requirements in each voltage level.

1-5.5.2 Service Safety Requirements.

This UFM addresses some safety requirements, but users must also be familiar with the service specific safety requirements.

1-5.5.3 Personal Protective Equipment.

Personal protective equipment (PPE) is equipment worn to minimize exposure to serious workplace injuries. These injuries may result from contact with electrical, chemical, physical, mechanical, or other workplace hazards. PPE may include items such as gloves, safety glasses and shoes, earplugs or muffs, hard hats, respirators, or coveralls, vests and full body suits. If PPE use is required, implement a PPE program. Address in the PPE program the hazards present; the selection, maintenance, and use of PPE; the training of employees; and monitoring of the program to ensure its ongoing

effectiveness. Refer to OSHA standards and UFM 3-560-01 to become familiar with PPE requirements.

1-5.5.4 Personal Protective Temporary Grounding.

This is temporary grounding installed to protect workers engaged in de-energized line maintenance. The grounds are provided to limit the voltage difference between any two accessible points at the work site to a safe value. An expanded discussion of protective grounding principles and practices is contained in IEEE 1048; NFPA 70B; “The Lineman’s and Cableman’s Handbook;” and UFM 3-560-01.

1-6 CYBER SECURITY.

All control systems (including systems separate from an energy management control system or a utility control system) must be planned, designed, acquired, executed and maintained in accordance with UFC 4-010-06, DoD Instruction 8500.01 and DoD Instruction 8510.01, and as required by individual Service Implementation Policy.

1-7 REFERENCES.

Appendix A contains a list of references used in this document. The publication date of the code or standard is not included in this document. In general, the latest available issuance of the reference is used.

1-8 GLOSSARY.

Appendix J contains acronyms, abbreviations, and terms.

CHAPTER 2 SYSTEM CONFIGURATIONS

2-1 DISTRIBUTION SYSTEM CONFIGURATIONS.

2-1.1 Radial Feed.

Radial feed systems (Figure 2-1) are defined as having a single source and single load with no interconnections to other sources.

Figure 2-1 Radial Feed

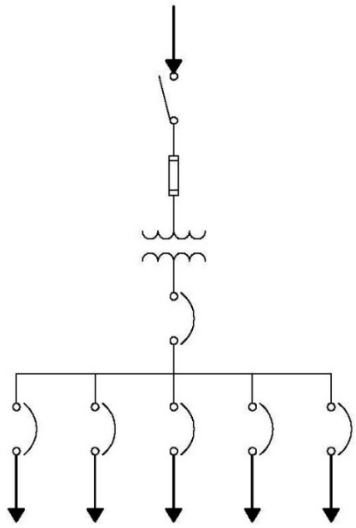

2-1.1.1 Benefits and Limitations.

Benefits: Radial feed systems are the least expensive to build and limit losses when there is a problem as only the loads on that feed are affected.

Limitations: Radial feed systems have the highest outage impact due to being unable to feed load from other sources of power. Overhead systems typically employ fuse saving methods using reclosers and sectionalizers to minimize the impacts of the majority of faults that are self-clearing see Section 4-2.

2-1.1.2 Reliability.

System redundancy requires having identical components available and in a usable configuration so that the replacement of a failed component will not result in a long-term outage. Outages / repairs may be able to extend longer based upon the loads being served. In general, redundancy is required to meet a requirement for long-term outage sustainment. The reliability is established by the backup generator.

2-1.1.3 Maintenance Implications.

Maintenance tasks require components de-energizing prior to testing. Therefore, any testing must have an outage unless there are redundant feeds or redundant circuit breakers, then one component may be taken out of service and another will feed the load. Outages will be short and quick, as components can be switched out as required.

2-1.2 Loop Feed.

Loop systems (Figure 2-2) loop through the service area and then return to the source. Alternate sources or paths for the service feeder may be installed.

Figure 2-2 Primary Loop System

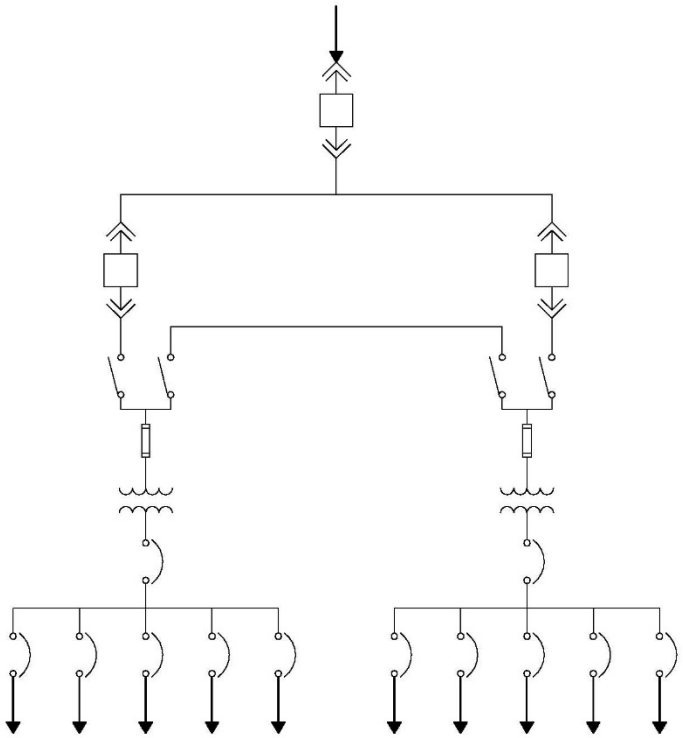

2-1.2.1 Benefits and Limitations.

Benefits: This is the next lowest cost system. The loop system gives another backup for the primary power feed. If a failure of the system is noted, power can be redirected through a re-configuration of the loop automatically, or manually as the system is set up. Typically, DoD installations are operated in an open loop configuration that only provides a “hot stand-by” for the system. If you operate a loop-feed closed, it can reduce the events that the entire system sees when the downstream protective devices

are properly coordinated. However, more fault current is available due to the paralleling effect, which is not desirable. Limitations: By operating it open-looped, you are removing some of the benefits of building the loop. However, in the event of a typical outage caused by a blown splice on a feeder cable, the outage will take down the entire loop. Furthermore, troubleshooting may be more difficult, depending upon how the loop is installed.

2-1.2.2 Reliability.

Depending on how it is operated this system is more reliable than the radial system as current has two paths to reach the loads.

2-2 SUBSTATION CONFIGURATIONS.

2-2.1 Double Feed, Double Bus.

In a double bus system (Figure 2-3), two identical busses are used in such a way that any outgoing or incoming feeder can be taken from any of the bus. Every feeder is connected to both of the buses in parallel through individual feeds. With double feeds, only the loads are individual. The system is able to have a failure of any individual feed and have a spare component substituted into its place.

Figure 2-3 Double Feed, Double Bus System

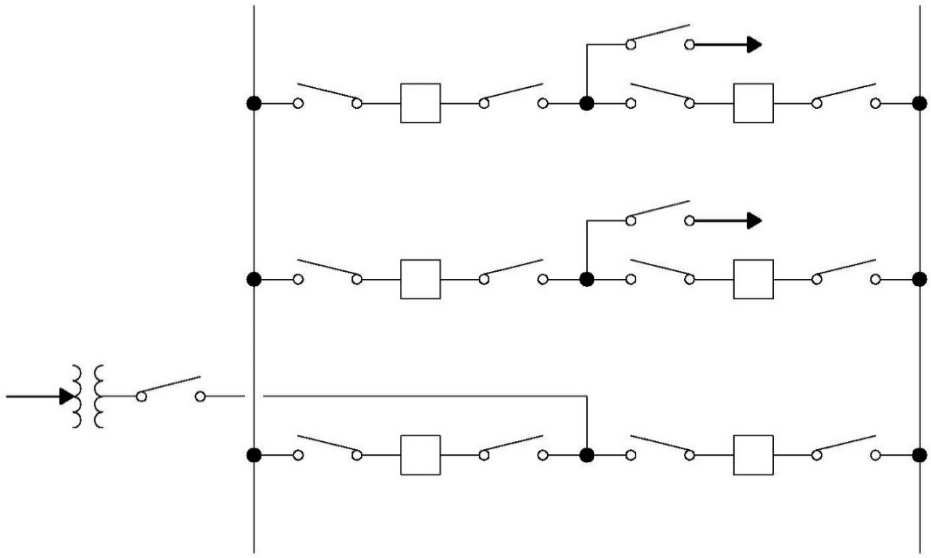

2-2.1.1 Benefit and Limitations.

Benefit: Double bus configuration increases flexibility for maintaining service through outages and performing maintenance in substations.

Limitations: Any large fault on the system will affect both buses. This is also the most expensive system, and has a lower reliability than a ring bus due to the fact that the radial feeds are not able to be maintained or replaced without taking the end load down.

2-2.1.2 Fault Tolerance.

Fault tolerance is the philosophy that states a system should survive faults with minimal downtime and if possible, automatically reconfigure itself to isolate the fault and mark it for repair. A double feed, double bus will have high fault tolerance due to the ability of the system to have alternate paths from the power source to the loads served, except to local loads. Relative fault tolerance – 3.

2-2.1.3 Maintenance Implications.

System maintenance is contained within the overcurrent device portion, relays, and in the cable testing.

2-2.2 Straight Bus.

A straight bus (Figure 2-4) is one where there is one source, and individual feeds to the loads. This is the same as the radial feed described above for connectivity purposes.

Figure 2-4 Straight Bus System

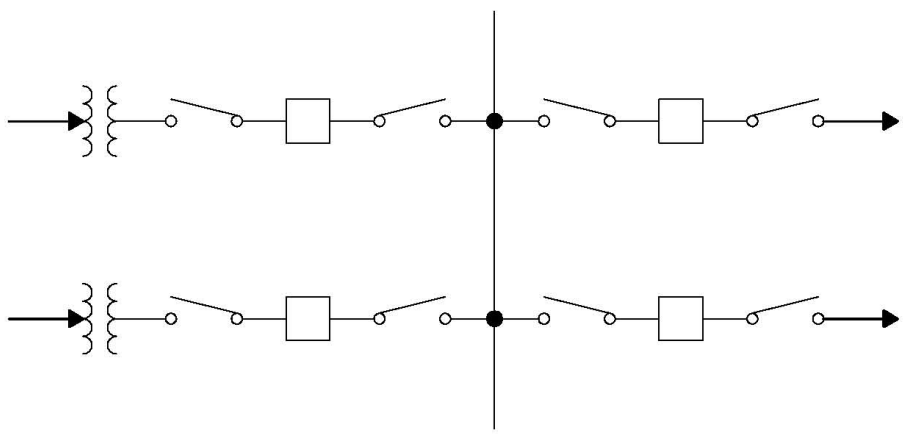

2-2.2.1 Benefit and Limitation.

Benefit: Straight bus/radial feed systems are the least expensive to build and radial feeds limit losses when there is a problem as only the loads on that system are affected.

Limitation: Straight bus/radial feed systems have the highest outages and highest mean time to repair due to the entire load being unable to be fed from other sources of power.

2-2.2.2 Fault Tolerance.

Straight bus systems have a very low tolerance of faults, as any one fault on the bus will take down the entire system. Relative fault tolerance – 1.

2-2.2.3 Maintenance Implications.

Maintenance tasks require the entire bus de-energized to work on without safety concerns. Outages will occur for all maintenance functions, such as insulation testing, breaker testing, etc.

2-2.3 Ring Bus.

A ring bus (Figure 2-5) is identical to a loop feed on the distribution side. This allows switching components to feed any load based upon faults anywhere on the bus structure. Loop systems must be carefully applied, as tying the two systems together, or completing the loop, will result in a future fault taking down both sides of the loop, rather than just one side. A loop system is fault tolerant to the extent that the faulted portion of the loop can usually be isolated and the entire ring placed back into service while the damaged portion is repaired.

Figure 2-5 Ring Bus System

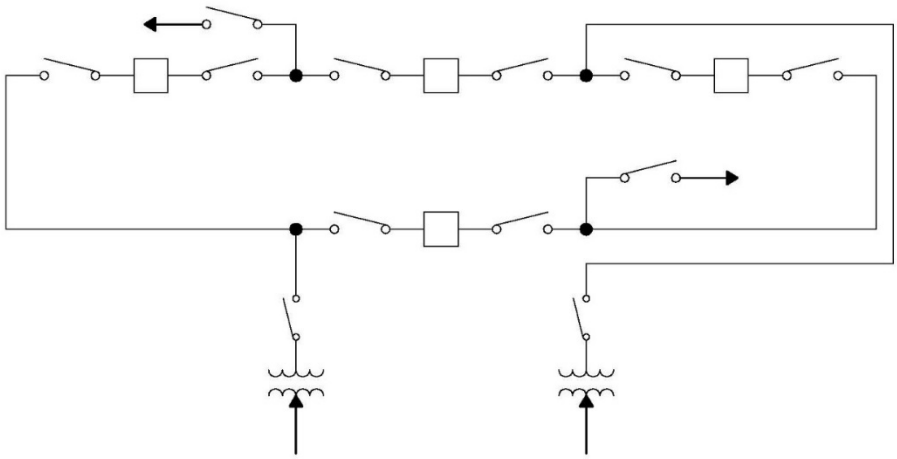

2-2.3.1 Benefits.

A loop system loops through the service area and then returns to the source. Sometimes there are alternate sources for the power, sometimes just alternate paths.

2-2.3.2 Fault Tolerance.

This system is more expensive that a single bus, however reliability is increased based upon the ability to move feeds to loads from any direction on the bus. Relative fault tolerance – 2.

2-2.3.3 Maintenance Implications.

Maintenance tasks are easier as portions of the bus can be taken down systematically and outages required to perform them don't affect the entire system.

2-2.4 Breaker-and-a-Half.

The breaker and a half system (Figure 2-6) is an improvement on the double breaker scheme as costs are lowered by reducing the number of required circuit breakers. For every two circuits, only one spare breaker is provided. The protection is however complicated since it must associate the central breaker with the feeder whose own breaker is taken out for maintenance. Because of the high costs of equipment, even this scheme is not very popular. As shown in the figure that it is a simple design, two feeders are fed from two different buses through their associated breakers and these two feeders are coupled by a third breaker which is called tie breaker. Normally all the three breakers are closed and power is fed to both the circuits from two buses which are operated in parallel. The tie breaker acts as coupler for the two feeder circuits.

Figure 2-6 Breaker and a Half System

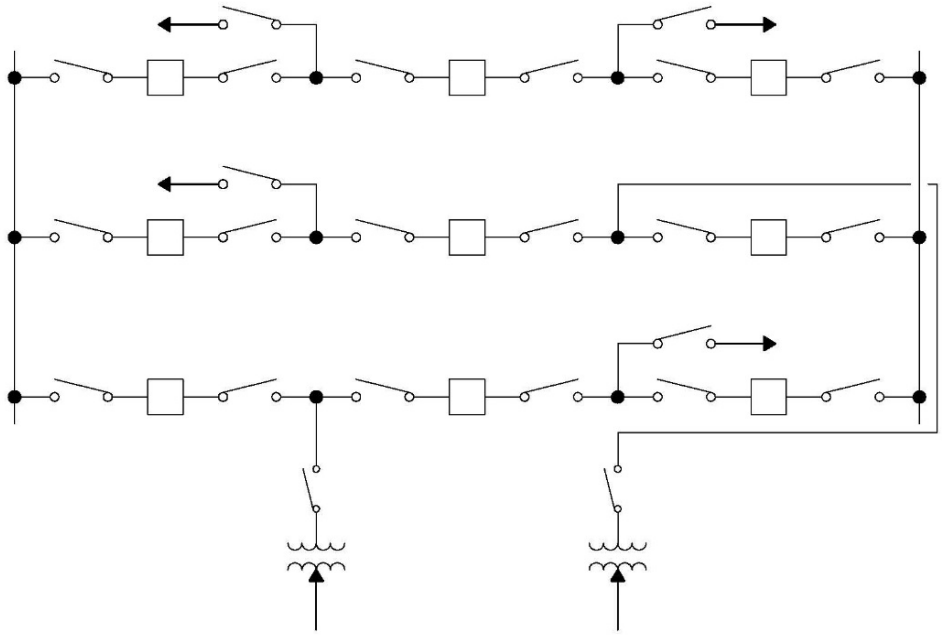

2-2.4.1 Benefits and Limitation.

Benefits: During any fault on any one of the buses, that faulty bus will be cleared instantly without interrupting any feeders in the system since all feeders will continue to feed from other healthy bus; however, it is cheaper than the double breaker configuration.

Limitation: This scheme is very expensive due to investment for third breaker.

2-2.4.2 Fault Tolerance.

This scheme is fairly highly tolerant for faults, as the third breaker allows a short time for switching. Relative fault tolerance – 5. Highest tolerance.

2-2.4.3 Maintenance Implications.

System maintenance is of a comparable level to the double breaker scheme.

2-2.5 Network Model.

A Network model (example provided in Figure 2-7) is a configuration using several of the above mentioned configurations. This allows many options and many configurations. However, this flexibility, because of complexity, requires a cybersecurity certified SCADA (Supervisory Control And Data Acquisition) system and highly trained operators to control feeders, monitor status, control breakers, and report maintenance issues.

Figure 2-7 Network Model

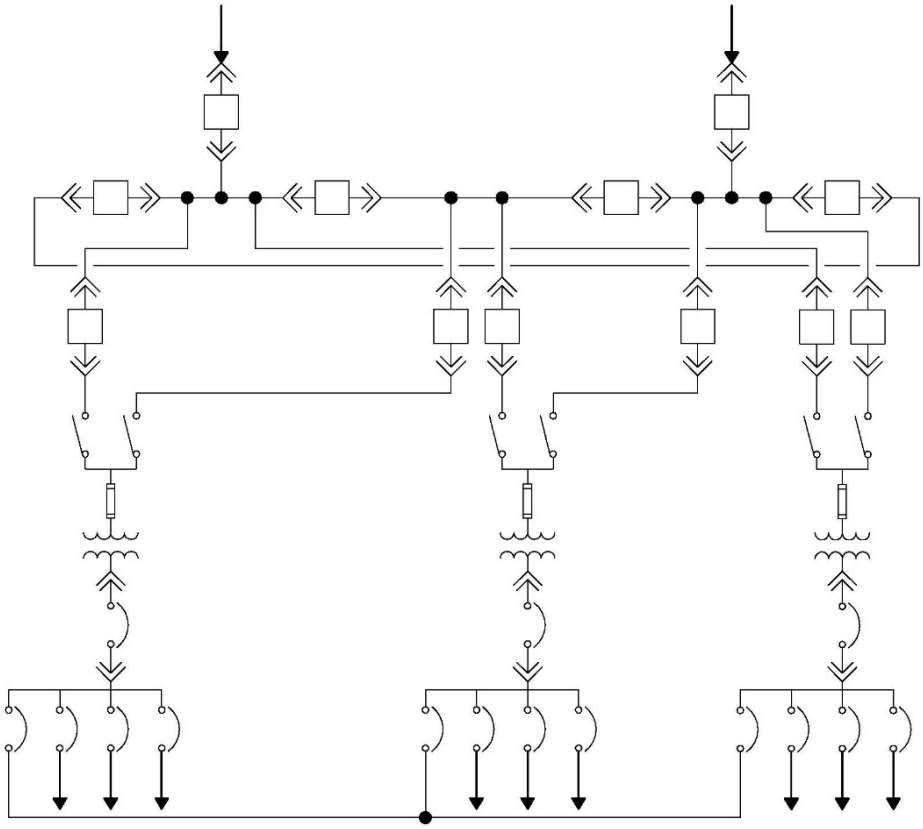

CHAPTER 3 DEVELOPING AN O&M PROGRAM

3-1 TRAINING.

3-1.1 Qualifications of Test Operators.

Test operators must be thoroughly familiar with the test equipment used in the type of test being performed, and sufficiently experienced to detect any equipment abnormalities or questionable data during the performance of the tests.

All qualified inspecting and repairing personnel must be thoroughly trained to perform such activities required. The following requirements are minimum:

- Familiarity with operating procedures, protective and interlocking schemes, and the equipment capabilities at the specific substation;
- Knowledge of the proper use of power distribution and utility systems control systems to ensure efficient O&M;
- Knowledge of general cybersecurity concerns and protection protocols for net-centric operations;
- Knowledge of the proper use of safety equipment, first aid procedures and equipment, and equipment grounding techniques;
- Access to safeguards such as danger signs, temporary barriers, protective clothing, tools and protective equipment, and all safety manuals and rules. Procedures to clearly indicate insulating requirements and working clearances for any category of energized-line maintenance employed; and
- Keeping proper inspection records and checklists so that observed defects or improper conditions will be promptly corrected.

3-1.2 Electric Workers, Instruments, and Reports.

Perform electrical equipment tests under the supervision of qualified electric workers. If in-house personnel are not available for these tests, the services of a qualified electrical testing agency may be used.

3-1.3 Testing Agency Qualifications.

Require the testing agency to submit proof that it is a corporately independent testing organization which can function independent of the manufacturers, suppliers, and installers of equipment or systems evaluated by the testing firm. The testing agency must meet OSHA criteria for accreditation of testing laboratories, Title 29, Part 1910-7; or be a full member company of the International Electrical Testing Association (NETA) and be regularly engaged in the testing of electrical equipment devices, installations,

and systems. The lead technical agency member on-site to have a current certification by NETA or the National Institute for Certification in Engineering Technologies (NICET) in electrical power distribution system testing.

3-2 TOOLS AND EQUIPMENT.

3-2.1 Electrical Tools and Equipment Standards.

Industry standards describe the requirements for electrical protective equipment and for tools. These standards were developed so that the tools, equipment, materials, and test methods used by electrical workers will provide protection from electrical hazards. Electrical protective equipment is included in the ASTM F18 series specifications. Tool and equipment terminology and in-service maintenance and electrical testing are included in ANSI/IEEE 935 and 516 and IEEE 978 respectively. UFM 3-560-01 also contain tool and equipment requirements. In case of conflict, always use the most stringent safety requirement.

3-2.2 Standard Tools and Equipment.

For simplicity and convenience, the tools and equipment required for electrical inspection and maintenance are classified as follows:

- Tools: Tools include hand tools, digging tools, hot line tools, miscellaneous and special tools, and tackle;
- Protective equipment: Protective equipment includes rubber gloves, helmets, lie hose, matting, blankets, insulator hoods, sleeves, barricades and warning devices;
- Climbing equipment: Climbing equipment includes body belts, safety and climber straps, climbers, and ladders;
- Electrical inspecting and testing equipment: Electrical inspecting and testing equipment includes electrical and mechanical devices used to test the operation of electrical equipment, such as voltmeters, ammeters, ohmmeters, tachometers, and similar devices;
- Large portable and mobile equipment: Large portable and mobile equipment includes relatively large and easily transportable equipment for use in maintenance work, such as line trucks, aerial lift trucks, motor-generator sets, posthole diggers, and similar apparatus;
- All hand and mechanically operated tools must be used in a manner to comply with all applicable safety rules. Each worker is responsible for observing safety rules and preventing accidents;

- Energized lines: The methods used when working on energized lines, such as gloving, use of hot line tools, and provision of electrically insulated buckets, will be in accordance with the applicable services' safety manuals. Safety rules governing the use of such tools and equipment are given in these manuals and in applicable OSHA regulations, 29 CFR 1910 and 29 CFR 1926; and

- Material use: An insulating type hydraulic fluid is required in all hydraulic hand tools used on or near energized lines and in insulated sections of aerial lift trucks. Hazardous material procedures must be followed when dealing with such substances.

Apply ANSI/IEEE Std 935 for the identification of tools and equipment used in live line work. Use tools in accordance with Chapter 6 in ANSI/IEEE Std 935. Maintain live line tools and rubber goods in accordance with UFM 3-560-01. Manufactured tools must meet ASTM F18 series specifications, as appropriate to the device and material. Refer to Chapter 6 for tools and equipment associated with overhead distribution.

3-2.3 Specialty Tools and Equipment.

Consider acquiring and using the following specialty tools and equipment:

- Remote racking mechanisms for switchgear circuit breakers – several manufacturers provide remote racking mechanisms that allow the electrical worker to stay well outside the arc flash boundary during circuit breaker racking operation;

- Remote switching actuators for circuit breakers – enables remote circuit breaker operation (open or close);

- Thermal imaging cameras;

- Power quality data loggers – for evaluation of normal system parameters, such as voltage, current, power factor and harmonic distortion, as well as for evaluation of abnormal events, such as voltage swells, sags, or outages;

- Wet/dry hot stick tester;

- Pad-mounted switchgear portable motor operator – for use on pad-mounted switchgear that is not operated with a hot stick; and

- Fault locating equipment.

3-2.4 Care and Storage of Tools and Equipment.

Tools and equipment will be kept in proper operating condition and used only for the purpose for which they were designed. If proper and safe tools are unavailable, report tool needs to a Supervisor.

Inspect all tools at regular intervals and any tool that develops defects when in use will be taken from service, tagged, and not used again until restored to proper working condition.

3-2.5 Electrical Inspecting and Testing Equipment.

The number and types of testing/inspection devices needed will depend on local needs. When available, follow the manufacturer's instructions for the care and maintenance of test equipment. The schedules for the calibration and tests of instruments and meters are dependent upon the particular installation. When precision is not essential, the period between tests is not critical and may be assigned as convenient. For units provided with built-in diagnostic capabilities, check diagnostics when their associated power apparatus is checked.

3-2.5.1 Maintenance of Instruments, Meters, and Test Equipment.

Only personnel trained and qualified to maintain instruments, meters, and test equipment, or personnel under the immediate supervision of such qualified personnel, are allowed to perform accuracy tests, repairs, calibrations, and adjustments of instruments and meters. When selecting meters, match meter accuracy to the requirements of which the reading and records are being used. Procuring equipment with higher accuracy than requirements dictate must be economically justified.

3-2.5.2 Frequency of Inspections.

Use the manufacturer's maintenance recommendations intervals as the initial inspection frequencies for normal conditions. Shorten intervals where adverse conditions exist and may be lengthened only where experience under better-than-normal conditions show this can be done safely. The inspection frequency may vary for similar equipment operating under different conditions.

If calibration standards and equipment are not available, instruments and meters of nearly the same rating can be checked against each one another. When wide discrepancies are noted or the instrument or meter that is obviously incorrect, recalibrate and make any needed repairs.

3-2.5.3 Test instrument Calibrations.

Calibrate instruments every 12 months. Calibrate analog instruments every 6 months. Calibration to provide the full-scale accuracy based on the manufacturer's data, usually

1% for switchboard instruments and 0.25 % for portable instruments. Ensure dated calibration labels are visible, and maintain up-to-date calibration records, instructions, and procedures for each instrument which have had a calibration standard of higher accuracy than that of the test instrument.

3-3 HAZARDOUS MATERIAL PROCEDURES.

Implement a hazard communication program in accordance with 29 CFR 1910.1200 or 29 CFR 1926.59, and DoDI 6050.05, DoD Hazard Communication (HAZCOM) Program, as amended by Agency guidance. The major hazardous items to which electrical workers may be exposed are asbestos, polychlorinated biphenyls (PCB's), sulfur hexafluoride (SF6) and some of the chemicals used to control undesirable brush or pests or to preserve wood. For PCBs, comply with 40 CFR 761 and Overseas Environmental Baseline Guidance Document (OEBGD) DOD 4715.05-G.

3-4 SYSTEM DATA, EQUIPMENT DATA, AND DOCUMENTATION.

Prior to performing any fieldwork, review historical Electrical Preventative Maintenance (EPM) data and applicable safety requirements.

- Assemble all documentation applying to the apparatus being checked:
  - Documentation Maintenance. Installation engineering function must ensure all documentation is maintained for each specific item of electrical apparatus which makes up the facility electrical power systems.
  - Available From Design/Construction Files. The available data may include all of the inspection and testing procedures for the facility, copies of previous reports, single-line diagrams, schematic diagrams, electrical equipment plans, records of complete nameplate data, submittals, and manufacturer's service manuals and instructions.
  - Locally Prepared. Prepare local EPM forms as necessary for installed equipment. Show each item of apparatus on an equipment location plan. Provide unique apparatus designations along with a locally prepared safety electrical one-line diagram and equipment location plan.
- Specific Assembling of Data. Assemble the following data, if available, for each specific item of apparatus:
  - Locally prepared forms and as-built drawings for electric equipment layouts and elevations.

- Trend analysis data to include:
  - Installation acceptance data test results; and
  - Previous EPM reports including any previous systematic evaluations.
- Manufacturer's service manuals including practices and procedures for:
  - Installation;
  - Disassembly/assembly (interconnection);
  - Wiring diagrams, schematics, bills of materials;
  - Operation (set-up and adjustment);
  - Maintenance (including parts list and recommended spares);
  - Software programs; and
  - Troubleshooting guidance.

Systematic Evaluation of Apparatus Condition. Perform a systematic evaluation the electric apparatus condition after an EPM which indicates repairs were necessary beyond normal expected maintenance. The systematic evaluation to include:

- Reasons for the required repairs;
- Work required to complete the repairs;
- Assessment of the remaining service life; and
- Determination of the need for a more frequent EPM.

3-5 TESTING INTERVALS.

Appendix I provides recommended testing intervals.

Comply with DISA Circular 350-195-2 for testing intervals for DoD Information Network facilities' electric power systems.

3-6 RISK MANAGEMENT ANALYSIS.

Risk management is covered under IEEE 399 Chapter 12 and IEEE 493 (Gold Book) which address system reliability. IEEE 493 covers the IEEE recommended practice for

the design of reliable industrial and commercial power systems. Risk management is based upon the probability of certain types of devices failing at a given period of time, and addressing maintenance according to schedules to avoid unknown or indeterminate outages. By following the recommendations in these guides, many risks can be mitigated without substantial extraneous failures.

3-7 RELIABILITY AND AVAILABILITY.

Power operational availability is the probability a system is not failed or is undergoing a repair action when it needs to be used. Availability is typically expressed as “nines.” A ‘three nine’ availably equates to 0.999 availability or a 0.001 unavailability. A 0.001 unavailability means the system has the probability of being down 8.76 hours a year (Table 3-1). Power reliability refers to the failure probability and is typically expressed as a percentage. A very reliable system is one that can be repaired or the power brought back rapidly. Resiliency is the capacity of the system to bounce back from a failure or a fault. TM 5-698-3 provides additional reliability background information.

System redundancies, either through loop feeds and/or generators/distributed generation, combined with ability to replace quickly failed components, contribute to high overall system availability. Evaluate mission availability needs when establishing O&M program requirements, specifically address personnel training, critical tools and supplies, and contracted functions response requirements.

Table 3-1 Availability and Downtime

Availability		Unavailability (1-availability)	Hours Per Year Downtime (8760 hours/year x unavailability)	Minutes Per Year Downtime
0.99	(2-9s)	0.01	87.6	-
0.999	(3-9s)	0.001	8.76	-
0.9999	(4-9s)	0.0001	-	52.56
0.99999	(5-9s)	0.00001	-	5.256

3-8 LIFE CYCLE COST ANALYSIS.

Life cycle cost analysis (LCCA) is a good tool for establishing an O&M program or contract scope. LCCA uses the effect of equipment age on the likelihood of failure and maintenance costs to determine when replacement with new equipment becomes the most cost effective O&M solution. Use LCCA to help direct available resources to requirements with highest life cycle and mission payback.

- IEEE 493 provides guidance on recommended design practices for reliable power systems; and

- See Appendices F, G, and H for sample maintenance program checklists, LCCA maintenance work sheet, and a Man-hour Ceiling/Priority Analysis Method (MAPCO) recurring maintenance document.

3-9 RECORD DOCUMENTS - MANUALS, DIAGRAMS AND DRAWINGS.

A comprehensive file of equipment and service records provide the necessary information for aiding inspections, maintenance, or tests. In addition to indicating basic information required for proper inspection of the equipment, these records would indicate where trouble has been experienced and where special procedures may be warranted.

3-9.1 Operation and Maintenance (O&M) Manuals.

Ensure that O&M manuals are provided for any new equipment or system. O&M manual submittal requirements are included with the Unified Facilities Guide Specifications that are developed for a project. For medium voltage or high voltage circuit breakers used at substations or switching stations, refer to IEEE Std C37.12.1 for additional information.

Retain any design analysis for new projects that includes power systems analyses, including power flow, short circuit, electrical coordination, or arc flash. Refer to Section 8 for analysis requirements.

3-9.2 Electrical Drawings.

Develop and maintain the following types of drawings:

- Primary distribution system – layout drawings showing primary distribution overlaid onto the base map;

- Primary distribution system – one-line drawings; and,

- Substations and switching stations – one-line, three-line, and equipment schematic and wiring drawings.

Provide the drawings in a computer-aided drafting (CAD) format. Develop the drawings in a form that is usable for operations and maintenance. These system drawings are not construction drawings. Refer to IEEE Std 3007.1 for additional guidance regarding system drawings.

3-9.2.1 Posting.

Post the primary distribution drawings at the exterior electrical shop and at each substation or switching station.

3-9.2.2 Periodic Update.

Update the primary distribution system drawings at least annually. Coordinate with engineering and drafting personnel to ensure that all known system changes are properly shown on the drawings.

3-9.3 Operating Instructions, Records, and Logs.

Service records constitute a history of all work performed on each item of equipment and are helpful in determining the overall condition and reliability of the electrical facilities. Service records to show type of work (visual inspection, routine maintenance, tests, repair), test results (load, voltage, amperes, temperature), and any other remarks deemed suitable. It is highly recommended that service records include a log of incidents and emergency operating procedures. Logs of incidents, such as power failures, surges, low voltage, or other system disturbances are very useful in planning and justifying corrective action.

Emergency work on electrical facilities is safer and quicker when instructions are prepared and posted in advance. Prepare instructions for each general type of anticipated emergency. Each instruction to state what actions each employee will do, provide alternatives for key personnel, and establish follow-up procedures. Post instructions in the electrical shop, security guard office, substations, operating areas, and such other locations, as the responsible supervisor deems advisable. List employees by name, title, and official telephone number. These instructions must also emphasize safety under conditions of stress, power interruptions, and similar emergencies.

3-9.4 Geospatial Information Systems.

Use of a geospatial information system (GIS) for utility infrastructure is recommended. If the Activity uses GIS, provide nameplate and configuration data for replacement equipment to the organization that updates the GIS information. Coordinate equipment naming conventions and data requirements with the utility GIS analyst so naming and collected data is consistent with the information provided on the installation’s CAD and GIS system drawings.

3-10 ENERGIZED WORK PROCEDURES.

3-10.1 Work on Energized Circuits.

Refer to UFM 3-560-01 for energized work requirements. OSHA 29 CFR 1910.333 limits work on live energized electrical equipment as follows: "*Live parts to which an employee may be exposed shall be de-energized before the employee works on or near them, unless the employer can demonstrate that de-energizing introduces additional or increased hazards or is not feasible due to equipment design or operational limitations*."

Some energized work activities are unavoidable. In these instances, UFM 3-560-01 requires an energized work permit prepared in advance of work execution.

3-10.2 Unique Procedures for an Energized Work Permit.

Unique operating procedures are recommended for each unavoidable routine tasks that involve working on energized electrical equipment. Provide energized work permit requests in NFPA 70E energized electrical work permit format. Use unique operating procedures to obtain energized work permit approvals as described in UFM 3-560-01. Examples of typical operating procedures for energized work on the primary distribution system include:

- Replacing fuses in medium voltage pad-mounted equipment;
- Replacing fuses on overhead circuits;
- Voltage and phase rotation checks;
- Applying and removing temporary grounds;
- Connecting or disconnecting loadbreak elbows;
- Electrical manhole inspections; and
- Pad-mounted electrical equipment inspections.

Refer to Appendix E for examples of an operating procedure.

3-11 LOCKOUT/TAGOUT PROCEDURES.

Comply with UFM 3-560-01 for lockout/tagout requirements.

3-12 CONFIRMATION OF ADEQUATE MAINTENANCE AND TESTING.

Document all maintenance and testing that is completed on electrical equipment. One form of confirmation of documented maintenance and testing is the use of calibration or

maintenance stickers applied to the equipment and a documented report of the maintenance and testing that was completed.

3-12.1 Calibration Sticker Classification Codes.

Not all electrical equipment will perform properly when checked. NFPA 70B expands on the concept of a calibration sticker by also specifying a color code system that indicates the functionality of the equipment that was checked:

- White: Serviceable. If a device passes all tests satisfactorily and has met the requirements of the testing specifications, then apply a white decal to the device. This indicates that the device is electrically and mechanically sound and acceptable for return to service. There could be some minor deficiencies with the equipment but none that affect the equipment electrically or mechanically to any large degree. Examples of deficiencies include evidence of slight corrosion, incorrect circuit ID, and nameplate missing.

- Yellow: Limited Service. If the device under test has a minor problem that is not detrimental to the protective operation or major design characteristics of that particular device, then apply a yellow “Limited Service” decal to the device. Examples of limited service classifications include indicating trip targets that don’t function properly, slightly lower than acceptable insulation resistance readings, and chipped arc chute.

- Red: Non-serviceable. If the device under test has a problem that is detrimental to the proper electrical or mechanical operation of that device, then apply a red “Non-serviceable” decal to the device. The non-serviceable decal would be attached to the device after attempts at field repair were made. Examples of non-serviceable classifications include no trip on one or more phases, low insulation resistance readings, mechanical trip problems, and high contact resistance readings. In addition, advise management or the owner of this condition.

If Activity uses equipment labeling as part of their testing/calibration program, use of color-coded labels is required.

3-12.2 Test Reports.

A dated test report must include, as a minimum, the following data:

- Description of equipment tested;

- Description of test;

- Test results with <u>ALL</u> fields completed;

- Summary of project findings and recommendations, if required for additional work;
- Documentation of the conditions at which the tests were performed; and
- Name and address of the testing firm along with contact information of the individual doing the testing.

CHAPTER 4 OPERATION

4-1 DEMAND LOAD.

4-1.1 Characteristics – Residential, Commercial, Industrial.

Most military Activities have power demand characteristics similar to commercial facilities. Most motor load tends to support infrastructure (sewer and water) or heating, ventilation, and air conditioning (HVAC) systems, with motors commonly less than 150 Hp. Industrial-type installations, such as systems with many large motors, including synchronous motors, are much less common.

4-1.2 Seasonal Behavior – Power Demand.

Although there are exceptions, most primary distribution systems exhibit a seasonal variation in the power demand. Figure 4-1 shows an example of a northern military base that shows a peak power demand in the summer. Figure 4-2 shows another example of a southern base with a summer peak demand that extends for several months.

Note: The scales are different for the examples shown below and reflect the actual power demand for different military bases. For example, the military base represented by Figure 4-2 has almost 4 times the peak power demand of the military base represented by Figure 4-1.

Figure 4-1 Power Demand Variation – Northern Base

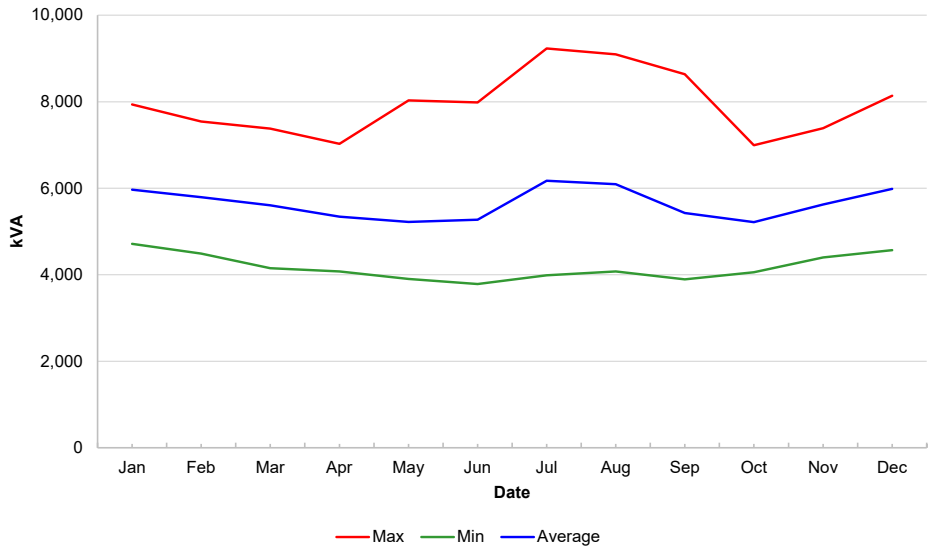

Figure 4-2 Power Demand Variation – Southern Base Demand

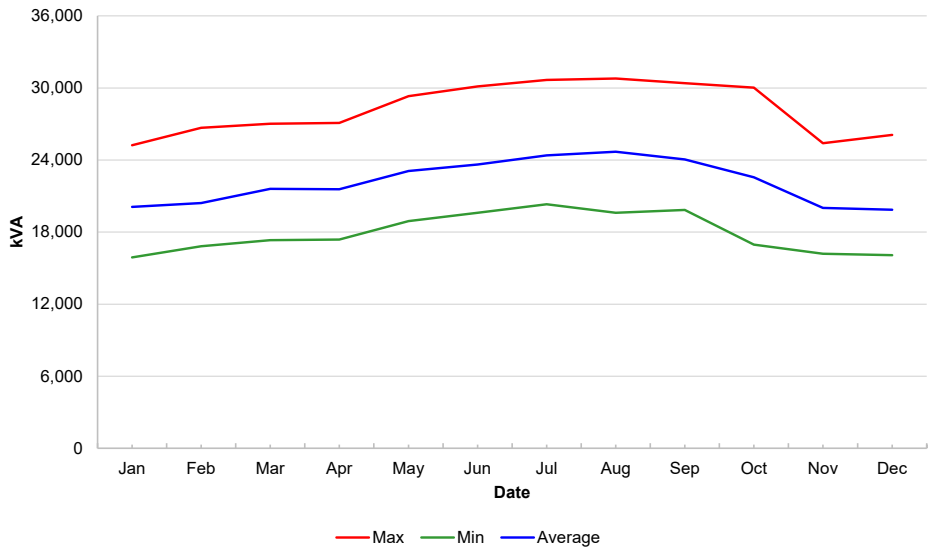

Even during the period of summer peak demand, there can be a substantial variation in the daily power demand as shown in Figure 4-3. The actual peak demand for each day might only occur for one hour in the early-to-mid afternoon time frame for a base in the northern part of the USA and it might last for several hours for a base in the southern part of the USA. Figure 4-3 shows the typical southern variation for a mainly housing circuit, a flight line industrial circuit, and a circuit with data center type loads.

Figure 4-3 Daily Power Demand Variation

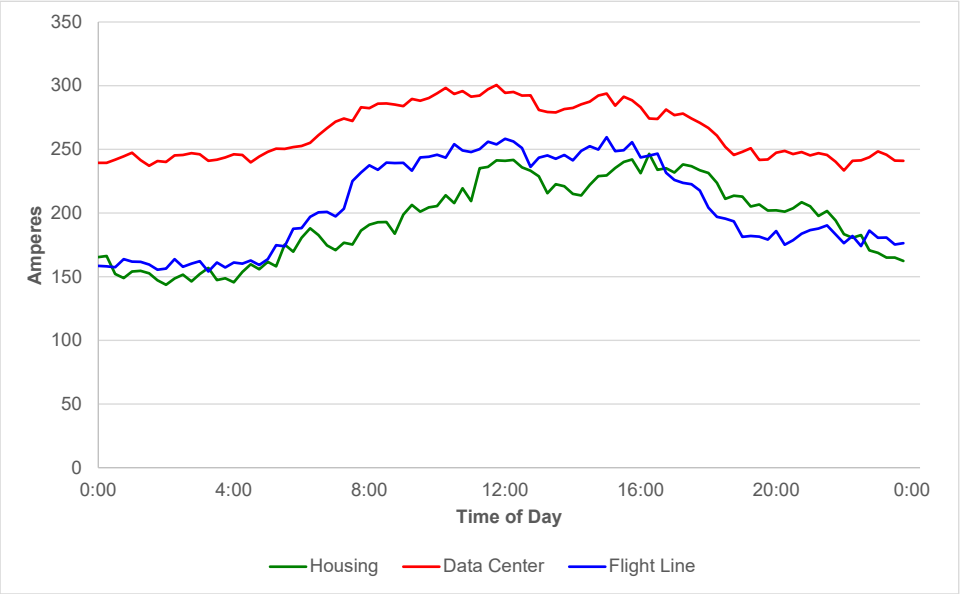

4-1.3 Circuits with Minimal Seasonal Behavior.

Not all primary distribution circuits exhibit seasonal variations. Distribution circuits that are dedicated to large facilities, such as data centers, might require year-round air conditioning, with little variation in power demand as shown in Figure 4-4.

Figure 4-4 Data Center Power Demand Variation

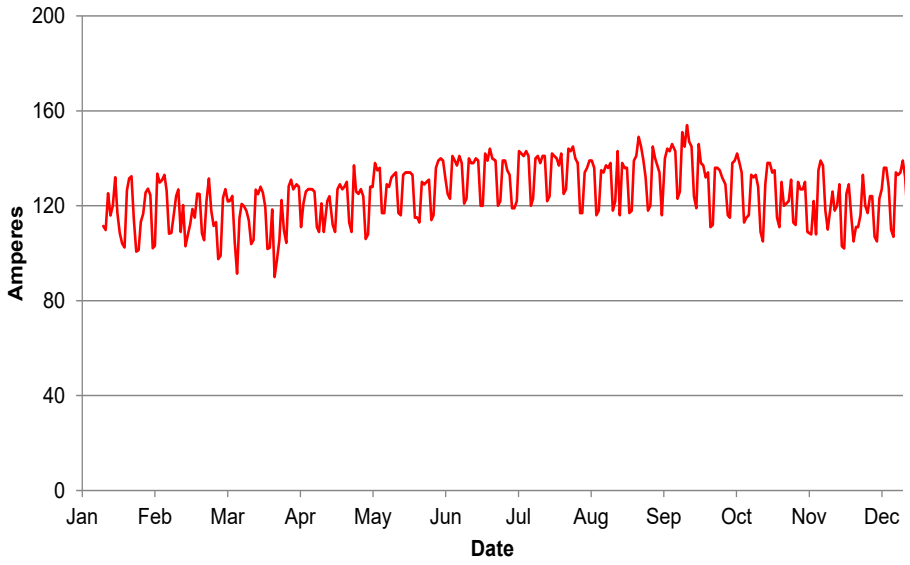

4-1.4 Metering Data as an Input to System Operation.

Evaluate the available metering data for the entire primary distribution system as well as for individual circuits to determine optimal operation. Use metering data for the following:

- Determine the optimal open point at cross-connect locations between distribution circuits;
- Identify peak demand loading that approaches ampacity limits on distribution circuits;
- Evaluate the extent of load growth on a distribution circuit and the potential need for upgraded circuits or additional circuits; and
- Confirm the need for additional power factor correction.

Update the metering data at least quarterly to identify any trends in power demand.

4-1.5 Load Shifting.

Load shifting, also known as Load Leveling, is the process of moving or “shifting” load from on-peak to off-peak periods. Popular methods used, but are not limited to: storage water heating, storage space heating, cool storage, and customer load shifts to take advantage of time-of-use or other special rates. Typically, there is an economic incentive built into the utility rate structure in an effort to reduce the demand placed on the system. By incentivizing the shift of load from on-peak to off-peak, the system performance can be enhanced and capital expenditure can be delayed that ordinarily would be required if the peak demand, or “peak shaving,” couldn’t be achieved. The result of this load shift can have a significant impact on system studies that utilize power flow analysis. If load can be shifted to other sources, any required system capitalization and expansion may be deferred. An economic example is providing an incentive for Activity to reduce their consumption at peak times to later in the day when the cost of energy is generally lower. This could include using the delayed setting on dishwashers which will postpone the operation of the dishwasher for a number of hours when the cost of energy is lower, thus distributing their consumption away from the system peak.

Load shifting can also imply the transfer of load from one source to another, either temporarily or permanently; for example, a temporary shift of load from one substation to another. In these circumstances, and if properly designed, a utility’s distribution circuit can be back fed by transferring the load through the use of system 3-phase switches that will allow for maintenance or system inspection be safely performed on the original circuit while allowing most, if not all the consumers, to remain energized. This also is a consideration when a permanent system configuration is necessary and the transfer of load from a heavily loaded or overloaded substation, or circuit, to a new circuit with sufficient equipment capacity to handle the additional transferred load is required. In either case, a good understanding of the system characteristics and dynamics is needed to assure the transfer of load does not negatively affect the delivery of energy to end users. Coordinate load shifting with the utility company when shifting load between substations that are billed separately to prevent the possibility of double demand billing.

Note: Load shifting involving storage cooling or heating can increase the total KWH usage compared to no-storage cooling or heating systems.

4-1.6 Peak Shaving/Load Shedding.

Peak Shaving, or Load Shedding, is the concerted effort to remove unnecessary load from the system peak load. At its simplest, this is the turning off of load at peak load times. However, there are other philosophies, similar to Load Shifting, which provide the utility the ability to transfer large system loads onto a local standby generator(s) by remotely starting the generator(s) and completing the transfer automatically or with coordinated switching procedures with the generator’s owner.

Mission operators may also have loads that can be postponed to later in the day or evening. In the case of a more complex system where it is possible to transfer some loads from one revenue meter to another, the operator may reduce the potential impact of contractual Demand Charges (kW) by moving some of the electrical loads. Because of this movement, their electrical reductions reduce the peak demands of their system. Typically, a demand rate is a contractual obligation between the utility and a larger electrical user. These charges are employed for various reasons by the utility, but are principally used to reduce demands on the system at critical times, to recover stranded equipment costs and encourage end users to distribute their electrical requirements throughout the day in order to defer future capital expansion costs. Another method of load shedding is to use distributed generation to address load shedding / peak shaving. Load peak shaving / load shedding or paralleling with the utility grid requires final approval from Agency utility leads, with an approved utility agreement, before utilizing this approach.

4-1.7 Coincidence.

Coincidence or Coincidence Factor is the ratio of the maximum demand of a system, or part under consideration, to the sum of the individual maximum demands of the base areas. In other words, it's the fraction of the peak demand of an area (or individual building), or revenue class of end user, that is in operation at the time of a system peak. Thus, it is the ratio of the installation's demand at the time of the system peak to its non-coincident peak demand. For example, a distribution system may have different classes of end users such as residential and military / commercial. The system peak may occur during the day at a time when the military / commercial Activity is high, but residential load increases late afternoon due to residents arriving home. At this time, both classes of users are placing a demand on the system and, as a whole, create a system peak, but when neither is at their individual class peak.

4-1.8 Trend Analysis.

4-1.8.1 Data.

Trend analysis data to include:

- Installation acceptance data test results;
- Previous EPM reports including any previous systematic evaluations; and
- Industrial Control System (ICS) Archive Server Feeder Trending.

In general, Trend Analysis is the review of historical information and data to determine future expectations and/or requirements. It is also used in predicting failure/risk exposure of installed electrical apparatus in guiding maintenance and replacement philosophies.

4-1.8.2 Analysis.

When applying a trend analysis to electrical distribution systems it is necessary to quantify the scope and duration of the trend. Typically, for short-range plans, a 5-year history suffices. However, as one looks further into the future as a longer-range plan develops, a more extensive historical data set is required and is typically a minimum of 10 years or more of history. These data sets would include a review of peak energy (kWh) and peak demands (kW & kVA) and where those loads are located within the system. This data provides the basis on which system load flow analysis can be used and analyzed. Load flow analysis shows how much load and where our system burdens exist. As these trends of consumption increase, various strategies can be developed based on future expectations that are shown in the analysis. Strategies such as load shedding, system capitalization / expansion, and system voltages can be explored depending upon economic justification. In addition to KW and KWH, trend analysis of cable or equipment failures (outages) is also a useful tool. Upstream outage trend analysis is a valuable part of periodic utility contract reviews. Include all this information in an annual hazard, vulnerability, and capabilities assessment in accordance with DoDI 4170.11, DoDI 4180.11, and service instructions, such as AFI 10-2501 and AFMAN 10-2504 for the Air Force.

Relative to maintenance, trend analysis can identify potential critical weak points within the system that may fail or whose ratings will be exceeded by either load flow analysis or any existing negative electrical characteristics, such as harmonics or system outages that resulted in numerous splices installed. Numerous overhead splices in a given area may indicate a more aggressive tree-trimming program is necessary. Decisions like this result from trend analysis.

4-1.9 Forecasting and Planning.

Load forecasting involves six (6) separate considerations. These are:

- Impact of nominal load growth over time. Typically, some slight growth in demand will be experienced over time. This may be upwards of ½ to 1% per year;

- Impact of equipment changes due to new equipment installations or modifications that are not part of the product (mission) plan, including environmental equipment, new technology applications, or new requirements, such as facility air conditioning or air tempering;

- New and modified production plans to meet requirements of the future product (mission) plan;

- Additional site development due to new on-site buildings(s) and added floor space. Typically, a site may be initially developed to a 15-20%

building to land ratio, with an allowance for future development of up to 30%. Some sites may be constrained for additional development;

- Impact of gas/oil conversion to electric use for some types of product (mission) heating where electric heating may actually be more economical (or reliable) due to inherent process efficiencies; and

- Other types of changes that cannot easily be categorized, such as higher density plant loading, etc.

Planning, or System Planning generally has four (4) aspects. These typically are 1-Objectives, 2-Planning, 3-Execution and 4-Control. The use of forecasting, trend analysis and standards are necessary to identify the Objectives. The long-range goals of the system are required for Planning. The necessary capital expenditures, land use, right-of-way and utility easements, overhead and underground construction costs are necessary for the Execution. Control is a periodic plan review to verify whether any of the first three (3) aspects have changed or still apply.

4-1.10 Demand Management.

4-1.10.1 Definition.

Demand Management is the collection of system load data and characteristics, and facilitates the basis of decision making when implementing any system plan. This data collection, and resulting decision making, can occur on either side of the utility electric meter, be it the producer or consumer.

4-1.10.2 Producer/Provider Demand Management.

With respect to the producer or provider, Demand Management is a means to collect relevant system data, which is then used in system studies to assist in the operation and administrative decision making of their system with the ultimate goal of providing quality, reliable energy at the lowest cost or greatest revenue depending upon mission philosophy, to end users. It allows the provider to coordinate system planning and construction in order that appropriate decisions and expenditures are used in the most efficient means with consideration to future growth, forecasting, and user's needs.

4-1.10.3 Consumer Demand Management.

Demand management relative to the consumer is more commonly known as Demand Side Management (DSM) and is generally a contractual or economic incentive program that is brought forth by the producer that allows the end user to reduce system losses attributable to their use and consumption. It is an effort to reduce demand. Furthermore, it includes a utility action that reduces or curtails end-use equipment or processes. DSM is often used in order to reduce customer load during peak demand and/or in times of supply constraint. DSM includes programs that are focused, deep,

and immediate, such as the brief curtailment of energy-intensive processes used by a utility's most demanding industrial customers, and programs that are broad, shallow, and less immediate, such as the promotion of energy-efficient equipment in residential and commercial sectors. An example of this load shedding is mentioned earlier.

4-2 RECLOSING PRACTICES AND FUSE SAVING.

Apply reclosing only on circuits where there is a reasonable expectation that faults will be temporary in nature. Do not apply reclosing unless there is a reasonable expectation that temporary faults can occur. Temporary faults are likely to occur on overhead distribution, but not on underground distribution. If reclosing capability is installed, disable reclosing if it supplies an underground distribution.

Note: The purpose of reclosing is to automatically restore power whenever a short circuit is only temporary. Industry experience with overhead lines is that 80% to 90% of faults are temporary, typically caused by lightning, wind-blown tree branches, wind-blown wires, birds, and animals. If the fault is temporary, the reclose feature allows power restoration without requiring power system line crews to respond.

Note: IEEE Std C37.104 states that reclosing should be applied only when there is a reasonable likelihood of a temporary fault. IEEE Std C37-230 states that reclosing is generally not applied on feeders with no overhead exposure, because faults on underground feeders are generally permanent.

Reclosing is authorized on distribution circuits as follows:

- Reclosing is allowed on overhead distribution circuits if there is a reasonable expectation that faults will be temporary in nature.

- Do not allow reclosing on underground distribution circuits. UFC 3-550-01 prohibits automatic circuit reclosing on underground distribution circuits.

  Note: Underground distribution faults tend to be permanent, caused by cable faults, termination failures, or improper excavation (another type of cable fault). If the reclosing feature is active when these types of faults occur, the faulted location is repeatedly reenergized until the reclosing device eventually locks out, thereby causing further damage to the fault location and unnecessarily stressing system equipment, including the substation transformer. In instances of cable damage caused by excavation, the reclose feature is an electrical safety hazard in that exposed damaged cable is reenergized with workers nearby.

  Note: Fault indicators are recommended for underground distribution circuits to assist with locating the faulted section of the line.

- For distribution circuits that contain a mix of overhead and underground distribution, treat the circuit as an underground circuit once the percentage of underground distribution exceeds 50%.

  Note: For overhead distribution circuits with main or lateral sections that convert to underground distribution, reclosing is allowed on the overhead line if a 3-gang fused cutout is included at the pole which has the aerial to underground transition point and the fuse rating is coordinated with the upstream recloser.

- For underground distribution circuits with main or lateral sections that convert to overhead distribution, reclosing is allowed at the point where the system changes to overhead distribution.

4-2.1 Reclosing Initiated at Substation or Switching Station Circuit Breakers.

When reclosing is initiated by circuit breakers at a substation or switching station, include the following:

- Provide phase and neutral instantaneous trips on the associated relays. Set the instantaneous trip low enough to be active throughout the distribution circuit; and

  Note: Downstream in-line reclosers might be required for longer distribution circuits that have a relatively low short circuit current in the remote sections of the circuit.

  Note: A sensitive instantaneous trip is desirable to allow temporary faults to clear before downstream fusing can respond.

- Set up reclosing to actuate only on the instantaneous trips.

4-2.2 Reclosing Initiated at Downstream Pole- or Pad-Mounted Reclosers.

Reclosers and the associated control units are typically installed at substations, switching stations, and power poles. Reclosers might be installed in a pad-mounted configuration if they are supplying a riser to a downstream overhead distribution. Provide phase and neutral fast trip and slow trip curve settings.

Note: Fast trip settings are selected for sensitive rapid trips to avoid clearing of downstream fusing. Slow trip settings are selected with a longer time delay to allow downstream fusing affected by the system fault an opportunity to clear. Figure 4-5 provides an example of these settings.

Figure 4-5 Typical Recloser Control Unit Settings

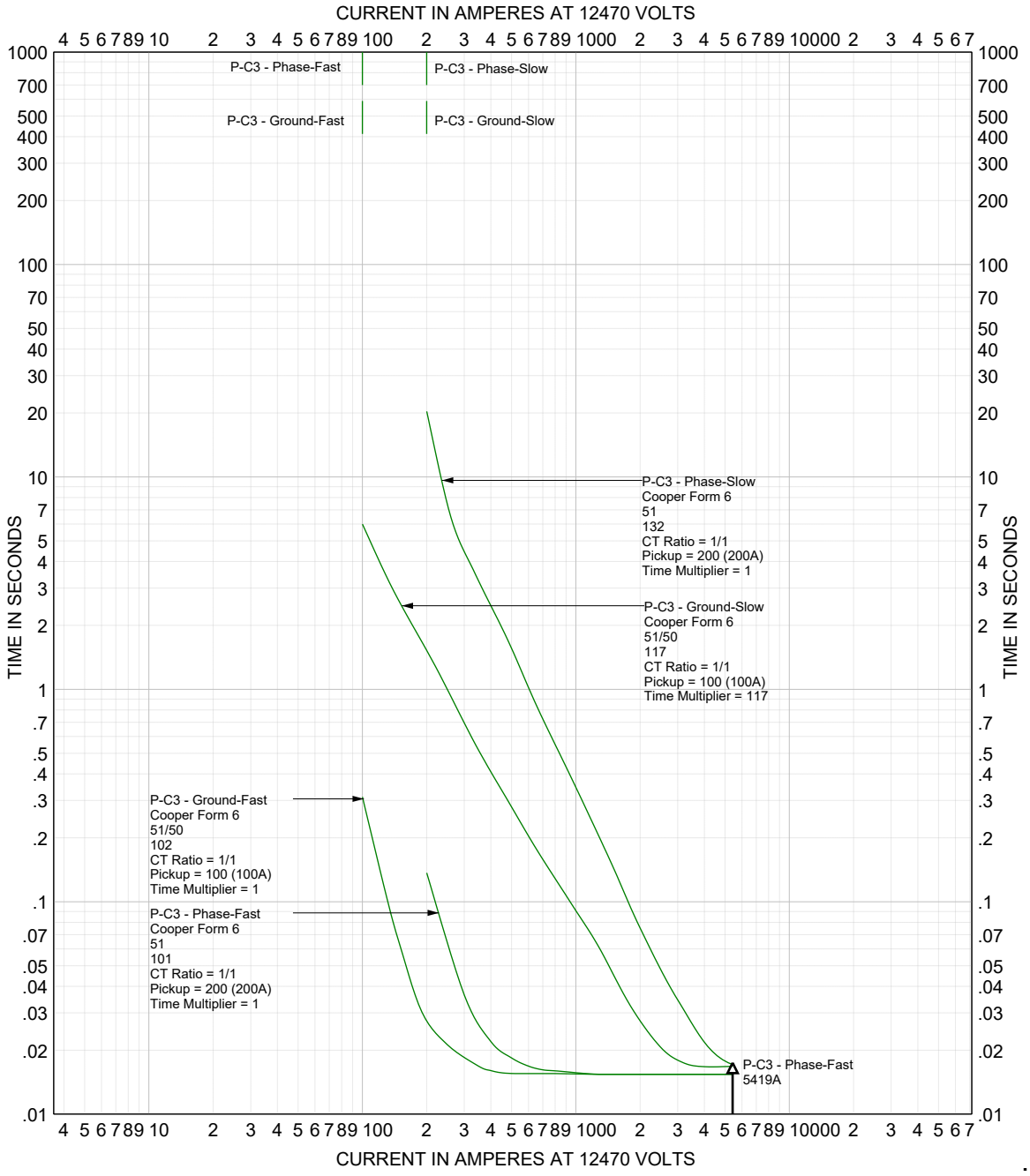

4-2.3 Maintenance Practices to Minimize Reclosing Events.

Circuit reclosing on overhead distribution systems is an efficient method for recovering from temporary faults when they occur. However, it is important to maintain the electrical distribution system in a manner that minimizes the occurrence of temporary

faults. As part of the periodic review of power poles, address the need for any of the following methods to reduce the frequency of temporary faults:

- Tree trimming – ensure that nearby trees are trimmed as needed to avoid overhead lines;
- If outages are caused by bird strikes, apply IEEE Std 1651 as a guide for maintaining the overhead distribution system;
- Power pole rerouting – in some locations, it might be easier to move the power poles rather than attempt to keep a forested area trimmed;
- In outage-prone areas, consider the use of covered overhead primary (often referred to as *tree wire*) as an alternative to the standard use of bare conductors;

  Note: Tree wire is a type of polyethylene insulated wire that can prevent some direct shorts and flashovers when contact is made with tree branches. Tree wire is similar to aerial cable in that the wires are insulated and provide some level of protection from animals or limbs faulting a line. Although the polyethylene does not apply a code-rated level of insulation, it is usually adequate for preventing phase-to-phase or phase-to-ground faults.

  Note: A downed tree wire line might not allow sufficient line-to-ground current flow to ensure an upstream protective device trip, thereby leaving the line energized while lying on the ground.

- Selective insulation – in some outage-prone locations, the addition of insulating material around the bare conductors might be helpful; and
- Underground installation – in extreme cases, the frequency of temporary faults might warrant converting the overhead distribution to an underground distribution.

4-3 POWER FACTOR CORRECTION.

4-3.1 Power Factor Variation.

Figure 4-6 shows a typical power factor variation at a military base. In this instance, Figure 4-6 shows the effect of adding automatic power factor correction capacitors at the utility supply connection point. Before the addition of capacitors, the power factor during the summer tended to fall below 0.90. After the addition of capacitors, the power factor during the summer remains above 0.97. Evaluate available metering data to determine:

- If capacitors are needed for power factor correction; and
- If existing capacitors can be removed from service without degrading the system power factor.

Primary distribution systems that are predominantly overhead often install capacitors on each circuit. Primary distribution systems that are predominantly underground often do not require additional power factor correction.

Figure 4-6 Typical Power Factor Variation

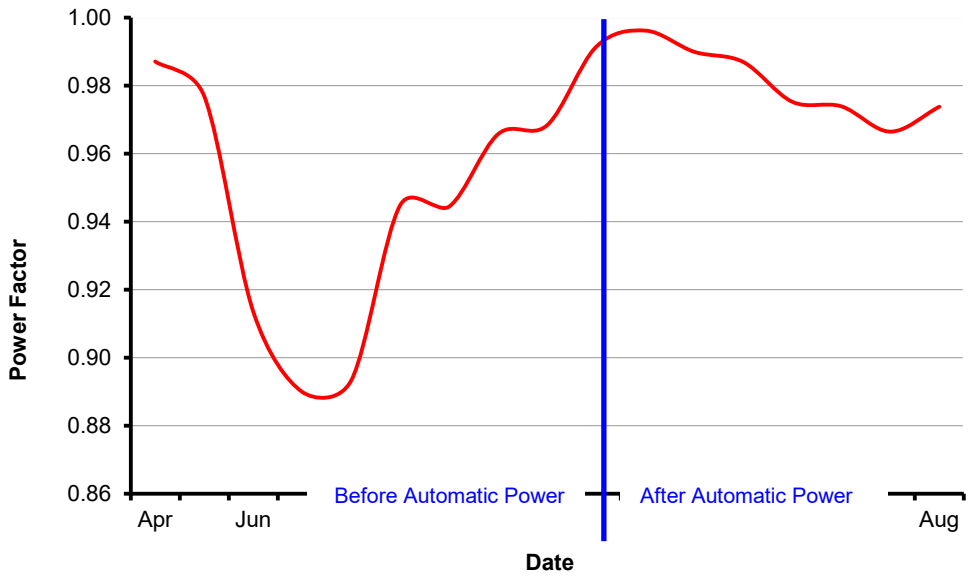

4-3.2 Power Factor Evaluation.

Complete an evaluation of the need for power factor correction before installing or removing capacitors in the system. Figure 4-6 shows an example of the typical variation that might be seen on a primary distribution system, with and without power factor correction. The following locations are typical candidates for power factor correction.

- Substations and switching stations. Larger (typically rated for more than 1,000 kVAR) shunt capacitor installations might be installed to improve system power factor. This is also a consideration if the local utility imposes a power factor penalty;
- Overhead distribution. Smaller (typically rated for less than 600 kVAR) shunt capacitor installations intended to improve line loading and system power factor; and

- Underground distribution. Pad-mounted capacitor installations might be installed, but underground distribution circuits typically have higher natural capacitance, which reduces the need for power factor correction.

Refer to IEEE Std 18 for rating and application criteria for capacitor installations. Apply IEEE Std C37.99 for overcurrent protection. Refer to TSEWG TP-02 at https://www.wbdg.org/dod/supp-tech-documents/tsewg-tp-02, for examples of capacitor sizing calculations.

Note: The addition of capacitors that are routinely switched, such as with automatic power factor correction, can result in voltage transients (momentary voltage spikes) that can be damaging to sensitive electronic and electrical equipment.

4-3.3 Operation.

Capacitor installations are often left in service for extended periods and would typically only be de-energized if necessary for seasonal variations of power factor or for repairs.

Follow electrical safety requirements in UFM 3-560-01 when energizing and de-energizing capacitor installations.

4-3.4 Automatic Operation.

Automatic capacitor operation might be installed in select locations and often have two or more capacitor banks that are switched in steps as necessary to maintain power factor within a specified range. Size the capacitors for each step operation based on the system kVAR demand and ensure a lagging power factor is maintained for each step.

4-4 DISTRIBUTED GENERATION.

Distributed generation can consist of three (3) broad categories: fossil fuel facility level generators (diesel, natural gas and propane generators, natural gas micro-turbines, combined heat and power, fuel cells), fossil fueled utility scaled generation (natural gas turbines) and renewable energy (photovoltaic, wind, geothermal, landfill gas, and solid waste). Distributed generation may also include energy from existing battery systems (electric vehicles). Each of these systems has special considerations. Studies are required prior to connecting Distributed Generation (DG) to the grid. There are studies ranging from dynamic simulations to power flow and effects. Problems like transient overvoltage (TOV), power quality, etc. can occur. Time is required to determine the Minimum Daytime Load (MDL) of a circuit. DG can impact the system operation when islanding is considered. The coordination with the utility is required for safety, billing considerations, and synchronization. Refer to UFC 3-540-08 and UFC 3-440-01.

CHAPTER 5 MAINTENANCE, INSPECTION, TESTING AND REPAIR

5-1 SYSTEM COMPONENTS AND MINIMUM REQUIREMENTS.

5-1.1 Substations.

Recommended intervals of maintenance of various pieces of equipment are also available in Annex L of NFPA 70B and NETA MTS Appendix B Frequency of Maintenance Tests. There are four different types of maintenance: Preventative, Predictive, Breakdown or Failure, and Corrective.

5-1.1.1 Preventative Maintenance.

Preventative maintenance involves collecting data, maintaining equipment in suggested intervals and maintaining up-to-date equipment files.

5-1.1.2 Predictive Maintenance.

Predictive substation maintenance is the concept of using reliability-centered maintenance. Reliability is defined as the probability that a system will perform a given function satisfactorily for a specified time under specified operating conditions. The four (4) fundamental principles of pure reliability centered maintenance theory are:

- The primary objective of reliability-centered maintenance is to preserve the system function;
- A good reliability-centered maintenance program identifies specific failure modes to define loss of function or functional failure;
- A reliability-centered maintenance program prioritizes the importance of the failure modes; and
- A reliability-centered maintenance program identifies effective and applicable preventive maintenance tasks.

The fundamental goals of reliability-centered maintenance are to preserve the function or operations of a system and to schedule all preventive maintenance tasks to preserve the defined function. The substations system function to preserve is the delivery of safe, reliable electric power to customers (missions).

5-1.1.3 Breakdown or Failure.

Breakdown or failure is simply repairing those item(s) that break. This is not optimal because it does not tend to analyze the origin of the failure.

5-1.1.4 Corrective.

Corrective maintenance is repair and analysis of a failure and determining the root cause of the failure and attempting to mitigate the cause of failure.

5-1.1.5 Maintenance Checklists and Reports.

Generally, for (mission-owned) substations, a third party is contracted to perform substation maintenance work since most (missions) lack the resources and experience to properly maintain high-voltage equipment. An inspection checklist, tailored to a specific substation and containing all items to check, is recommended. See Substation Inspection Checklist (IEEE 141) and Technology Matrix (USDA RUS Bulletin 1724E-300). Include visual and infrared inspections of substations as part of the regular items to complete on the checklist. Tabulate, analyze, and compare in detail the periodic system data and reports, such as substation maintenance reports and min-max voltmeter readings, for trending conditions.

5-1.2 Power Transformers Recommended Intervals and Requirements.

Perform visual and mechanical inspections on an annual basis. However, general inspections can be performed anytime the power transformer is visited. Track results and trend analysis performed. Typical NETA MTS items inspected are:

- Inspect physical and mechanical condition;
- Inspect anchorage, alignment and grounding;
- Verify presence of PCB labeling, if present;
- Prior to cleaning the unit perform as-found tests, if required;
- Clean bushings and control cabinet;
- Verify operation of alarms, control and trip circuits;
- Verify that cooling fans and pumps operate correctly;
- Inspect bolted electrical connections for high resistance;
- Verify correct liquid level;
- Verify that positive pressure is maintained on gas blanketed transformers;
- Perform inspections and mechanical test on recommended by manufacturer;

- Test load tap-changer, if applicable;
- Verify the presence of transformer surge arresters;
- Perform as-left tests;
- Verify de-energized tap changer position is left as specified; and
- Check integrity of oil containment dike and drain any storm water collected.

Perform electrical inspections, such as insulation testing and gas analysis annually or every five (5) years depending upon the apparatus of the transformer, unless a fault event has occurred. These tests depend upon the critical nature of the transformer regarding dissolved gas. This could apply to 500 kVA units or higher. Smaller, oil filled units such as those that serve residential units probably require no testing. Electrical testing should be performed after any event. Track results and trend analysis performed. Typical NETA MTS items inspected are:

- Resistance measurements through bolted connections with a low resistance ohm meter, if applicable;
- Perform insulation-resistance tests;
- Perform turns ratio tests at designated tap position;
- Perform insulation power-factor or dissipation-factor test on all windings;
- Perform power-factor or dissipation-factor tests on each bushing;
- Perform excitation-current test;
- Measure the resistance of each winding at the designated tap position;
- If the core ground strap is accessible, remove and measure the core insulation resistance at 500 volt (V) direct current (DC);
- Measure the percentage of oxygen in the gas blanket, if applicable;
- Remove a sample of the insulating liquid and test for;
  - Dielectric breakdown voltage
  - Acid neutralization number
  - Specific Gravity

  - Interfacial tension
  - Color
  - Visual condition
  - Water in insulating liquids
  - Measure power factor or dissipation factor
- Remove a sample of the insulating liquid and perform a dissolved gas analysis (DGA);
  - Include Furan DGA for cellulose paper insulation degradation determination.
  - The baseline Furan Gas percentage can be used for predictive testing of remaining life of substation transformers by performing periodic Furan Dissolved Gas tests.
- Test the instrument transformers;
- Test the surge arresters;
- Test the transformer neutral ground impedance devices, if applicable; and
- When replacing transformers, ‘right-size’ the transformers to reduce or eliminate unnecessary arc flash incident energy levels.

5-1.3 Switching Equipment.

Switching equipment can contain numerous types of apparatus utilizing air, oil or SF_6 as an insulating medium. For this document, switching can be broken into two categories; Low Voltage (<1000V) and Medium Voltage Switching (>= 1000V). Generally, substations may contain both voltage classes. No work is allowed on switches until both sides of each phase are de-energized and properly grounded. In addition, follow the specific maintenance directions of the switch manufacturer.

5-1.3.1 Inspection Frequency.

Inspect switches visually at a frequency determined by local conditions, such as atmospheric contamination, use of contamination control coatings, operations, or fault current exposure.

5-1.3.2 Need.

If a switch cannot be maintained on a periodic basis, its service life may be affected. When operated, it is recommended that the switch be opened and closed several times in order to clean the contacts and free the moving parts.

5-1.3.3 Visual Aids.

Binoculars can facilitate spotting switches that are obviously in need of repair or maintenance because of broken insulators or other parts. Visual inspection of a wet switch, or the use of a temperature-scanning detector, may indicate hot spots which are possible sources of trouble. Directional microphones or ultrasonic detectors can be used to locate local corona sources needing removal.

5-1.3.4 Scheduling.

A relatively small amount of maintenance is required on modern switches. It is recommended that the schedule for such maintenance be coordinated with that of associated equipment. Schedule special inspection and maintenance whenever the switch has carried heavy short-circuit current.

5-1.3.5 Checking.

Examination of de-energized and grounded switches to include the following items:

- Operating Mechanism. Check the adjustment of the operating mechanism, operating rod, and interphase tie rods (if used) to ensure simultaneous and smooth operation of the switch blades. Clean and lubricate mechanisms only when so recommended, and then only in accordance with the manufacturer's instructions as many modern switches are built with self-lubricating bearings. Examine all metallic parts of an operating mechanism including operating handle connection for signs of rust, corrosion, and loose or broken connectors. Switches located outside of a fenced and locked area, and having operating handles at ground level, require locking provisions on handles for both the open and closed positions. Switches located within a fenced and locked area, are subject to local regulations for locking.

  - Inspect all live parts for scarring, gouging, or sharp points, which could contribute to excessive radio noise and corona. Check corona balls and rings for damage which could impair their effectiveness.

  - Power-operating mechanisms for switches are usually of the motor-driven, spring, hydraulic, or pneumatic type. Follow the manufacturer's instructions with regard to the limit switch

adjustment. Check associated relay equipment for poor contacts, burned out coils, and adequacy of supply voltage. Check the complete electrical circuit of a motor-operated mechanism to ensure proper operation and wiring which is secure and free of insulation defects.

– Inspect, check, and test all safety interlocks for proper operation.

- Insulators. Examine insulators for cracks, chips, breaks, and evidence of flashover. Replace bad insulators. Clean insulators to remove any contaminating materials that may be present. Report the presence of an excessive amount of contamination to the supervisor, as it may require corrective measures;

- Mounting. Check mountings for evidence of rust and corrosion and to ensure proper alignment and securement. Ground connections must be tight;

- Blades. Inspect the blade or movable contact of the switch for evidence of overheating, which may be indicated by discolorations. If overheating is caused by poor contact, adjust and clean contacts to improve contact. Report to the supervisor any switches that appear to have overheated due to load currents in excess of rating;

- Blade Latch. A blade latch is used on a hook stick operated switch to hold the blade in closed position. Check the switch in the closed position to determine whether the catch is functioning properly;

- Contacts. Clean contacts and adjust in accordance with manufacturer's instructions. Modern switches are normally designed so that the contacts are self-cleaning by the opening and closing action of the switch. After a switch remains in either position for a long time, operate several times during a maintenance inspection. This operation will clean the contact surfaces. Operate only after getting clearance and after the circuit has been de-energized;

  – Do not use a coarse abrasive to clean contacts. If contact pitting is minor, smooth the surface with clean crocus cloth or as the manufacturer recommends.

  – Where arcing horns are used, ensure they make contact as intended during opening and closing operations.

  – Use a non-oxidizing lubricant to protect the contacts against oxidation and to lubricate the blade hinge. Silicone greases are

excellent for this purpose, as they are relatively unaffected by changes in temperature and are highly water resistant.

- Terminals and connections. Check terminals to ensure that they are secure. Correct connections showing evidence of heat as a high-resistance contact is indicated; and

- Interrupting elements. Load interrupter switches are equipped with an interrupter element, designed to quench the arc that results when the switch is opened under loaded conditions. These elements are shunt devices, installed as part of the switch, through which current passes only as the switch is opened. In some higher voltage designs, the arc quenching medium is air.

5-1.3.6 Medium Voltage Switches.

For medium voltage switches and switching equipment, include all the inspection and mechanical testing identified in the low voltage section along with the following:

- Verify that expulsion-limiting devices are in place on all fuses that have expulsion-type elements;

- Verify that phase-barrier mounting is intact;

- Verify correct operation of all indicating and control devices;

- Use appropriate lubrication on moving current-carrying parts and on moving and sliding surfaces; and

- Perform as-left tests.

Electrical tests for medium voltage switches and switching equipment within a substation are comparable to those for low voltage switches with the inclusion of the following:

- Perform a dielectric withstand voltage test on each pole with switch closed. Test each pole to ground with all other poles grounded.

5-1.4 Tap Changers/Voltage Regulators.

These apparatus may be devices that are active or change internal mechanical positions several times a day depending upon the device. For example, a power transformer may have mechanically held Tap Changers which require powering off the transformer to enable the repositioning of the taps within the transformer. Other tap changers, such as Automatic Load Tap Changers can step up or down voltages through the day, similar to Voltage Regulators, as the loading of the substation changes through

the day. Inspect the mechanical apparatus along with the contacts internal to the tested changer/regulator.

5-1.4.1 Visual Inspections:

Perform visual inspection and cleaning on an annual basis. Perform voltage regulator model validation along with performance testing every five (5) years. For tap changers and voltage regulators:

- Inspect physical and mechanical condition;
- Inspect anchorage, alignment and grounding;
- Record position indicator as found, maximum and minimum values, and record reading on tap changer operations counter;
- Prior to cleaning the unit, perform as-found tests;
- Clean the unit;
- Inspect bolted electrical connections for high resistance;
- Verify correct auxiliary device operation;
- Verify motor and drive train for correct operation and automatic motor cutoff at maximum lower and maximum raise;
- Verify correct liquid level in all tanks;
- Perform specific inspections and mechanical tests as recommended by the manufacturer;
- Visually inspect wear/erosion indicators on vacuum bottles, if applicable;
- Perform an internal inspection;
    1. Remove oil.
    2. Clean carbon residue and debris from compartment.
    3. Inspect contacts for wear and alignment.
    4. Inspect all electrical and mechanical connections for tightness using calibrated torque wrench.

5. Inspect tap changer compartment terminal board, contact support boards and insulated operation components for evidence of moisture, cracks, excessive wear, breakage, and/or signs of electrical tracking.

6. Electrically operate tap-changer through full range of taps.

7. Replace gaskets and seal compartment.

8. Fill with filtered oil.

- Use appropriate lubrication on moving current carrying parts and on moving and sliding surfaces;
- Perform as-left tests; and
- Record as-found and as-left operation counter readings.

5-1.4.2 Electrical Tests.

Electrical tests to:

- Perform resistance measurements through bolted connections with low-resistance ohmmeter;
- Perform insulation-resistance test in any off neutral position;
- Perform insulation power-factor or dissipation-factor tests in the off neutral position;
- Perform winding resistance test;
- Perform special tests and adjustments as recommended by the manufacturer;
- Perform turns-ratio test at all tap positions;
- Remove sample of insulating liquid and test for;
  - Dielectric breakdown voltage.
  - Color.
  - Visual condition.
- Remove sample of insulation liquid and perform DGA;

- Perform vacuum bottle integrity tests across each vacuum bottle with contacts in the open position; and
- Verify operation of heaters.

5-1.5 Relays, Instruments and Controls.

5-1.5.1 Discussion and Requirements on Controls.

Protective devices must operate during abnormal plant operating conditions and, in most instances, are the last line of defense to protect equipment from a catastrophic failure. It is critical these protective devices function properly to adequately protect the associated piece of equipment and that adjustments and calibrations are routinely conducted to eliminate the possibility of the protective device mis-operation. Therefore, it is imperative to conduct periodic maintenance testing to validate that the operational parameters of the functional protective device are properly set and coordinated, and to analyze findings to reveal trends which might lead to future failures.

5-1.5.2 Test Considerations.

Tests should simulate normal operating conditions. Avoid over testing because such tests can often cause more problems than they correct. The variables that may cause problems are relay complexity, environment, history, and facility relay-type experience. Other considerations are relay age and relay stress (relays operated at greater currents and/or control voltages because of station expansions).

5-1.5.3 Frequency.

Inspections made every 2 to 3 years are usually sufficient. Testing may be necessary after a relay operation. Additional visual inspections can be made at any time other area visual inspections are required. Check relay settings at least once a year and after any incorrect operation or redesign of the system. These inspections, supplemented by suitable tests, should be thorough enough to detect any faulty relays, settings, or wiring errors before trouble is encountered. During annual testing, provide a dated copy of the native microprocessor relay settings electronic file to the installation electrical engineer for archival purposes. For example, provide the ".rdb" file for SEL relays to the installation electrical engineer.

Completely disconnect relays from any live circuit when they are inspected or tested. Only permit specially trained electricians to repair and adjust relays, and check manufacturer’s instructions for the proper procedures. Major repairs and testing should be conducted in a facility’s testing laboratory or by contract personnel with access to any special testing equipment needed. NETA MTS suggestions include:

- Inspect relays and case for physical damage;

- Prior to cleaning the unit, perform as-found tests, if required;
- Clean the unit;
- Relay case;
  - Tighten case connections.
  - Inspect cover for correct gasket seal.
  - Clean cover glass.
  - Inspect shorting hardware connection paddles, and/or knife switches.
  - Remove any foreign material from the case.
  - Verify target rest.
- Relay;
  - Inspect relay for foreign material, particularly in disk slots of the damping and electromagnets.
  - Verify disk and contact clearance and spring bias.
  - Inspect spiral spring convolutions.
  - Inspect disk and contact for freedom of movement and correct travel.
  - Verify tightness of mounting hardware and connections.
  - Burnish contacts.
  - Inspect bearings and/or pivots.
- Verify that all settings are in accordance with coordination study or setting sheet supplied by owner;
- Perform as-left tests. Primary injection testing is required for end-to-end testing. Secondary injection testing of only the relay is not adequate to determine proper system operation;
- Intervals for electromechanical relays;

Table 5-1 Electromechanical Relay Test Intervals

Required Tests	Recommended Interval
Calibration maintenance	2 years
Relay functional test	2 years
Check for relay power supply indicating light	Weekly
Calibration maintenance	2 years
Relay functional test	2 years

- Contacts;
- Moving parts;
- Connections;
- Case and cover;
- Intervals for electronic relays;

Table 5-2 Electronic Relay Test Intervals

Maintenance or Test	Recommended Interval
Check for relay trouble light	Weekly
Relay functional test Monitored	6 years
Relay function test Unmonitored	4 years

- Relay functional testing of microprocessor relays will include the testing of the digital and analog inputs and outputs; and
- Monitored – A microprocessor relay is considered unmonitored unless facility monitoring meets all the following requirements:
  - Real time monitoring and alarm of the relay internal self-monitoring alarm.
  - Real time monitoring and alarm for DC supply or power supply failure.

- Monitoring of trip coil continuity (either real time or via red light check interval).
- If applicable, monitoring of protection telecommunication system (real time or periodically per test interval).
- Monitoring DC battery voltage (real time or per test interval).
- Verification of relay inputs and outputs (real time or per test interval).
- End-to-end testing – confirmation the overcurrent test signal energized the trip coil and tripped the breaker.

5-1.6 Stationary Batteries and Battery Chargers.

Maintain substation and switching station stationary batteries in accordance with the following industry standards as modified by the requirements specified in the applicable section below.

- Vented lead acid batteries – IEEE Std 450
- Valve regulated lead acid batteries – IEEE Std 1188
- Nickel cadmium batteries – IEEE Std 1106

Use the protective equipment and follow the safety precautions specified by the applicable IEEE standard. For further battery requirements, refer to UFC 3-550-01.

5-1.6.1 Stationary Battery Approach Boundaries.

Substation and switching station stationary batteries typically operate at either 48 or 125 VDC. Observe the minimum approach distances specified in Table 5-3 and apply the arc flash PPE Category specified in Table 5-4 for the available short circuit current. Refer to UFM 3-560-01 for further information.

Table 5-3 Qualified Worker Minimum Approach Distances – DC Systems

Nominal System Voltage Range Phase to Phase	Limited Approach Boundary		Restricted Approach Boundary
	Exposed Movable Conductor	Exposed Fixed Circuit Part	Includes Reduced Inadvertent Movement Adder
<100 V	Not specified	Not specified	Not specified
100 V to 300 V	10 ft 0 in (3.0 m)	3 ft 6 in (1.0 m)	Avoid contact
>300 V to 1 kV	10 ft 0 in (3.0 m)	3 ft 6 in (1.0 m)	1 ft 0 in (0.3 m)

Table 5-4 Arc Flash PPE Categories for DC Systems

Equipment	PPE Category	Arc Flash Boundary
Storage batteries, DC switchboards, and other DC supply sources 100 V> Voltage < 250 V Maximum arc duration and working distance: 2 sec @ 18 in.		
Short-circuit current <4 kA	1	3 ft
4 kA ≤ short-circuit current < 7 kA	2	4 ft
7 kA ≤ short-circuit current < 15 kA	3	6 ft
Storage batteries, DC switchboards, and other DC supply sources 250 V ≤ Voltage ≤ 600 V Maximum arc duration and working distance: 2 sec @ 18 in.		
Short-circuit current 1.5 kA	1	3 ft
1.5 kA ≤ short-circuit current < 3 kA	2	4 ft
3 kA ≤ short-circuit current < 7 kA	3	6 ft
7 kA ≤ short-circuit current < 10 kA	4	8 ft

5-1.6.2 Vented Lead Acid Batteries.

Perform battery inspections, tests, and maintenance in accordance with IEEE Std 450 as modified below. Correct deficient items as they are discovered.

5-1.6.2.1 **Weekly.** Verify the battery charger(s) is operating at the battery float voltage within battery manufacturer's specified range.

5-1.6.2.2 **Monthly.** Check and record the following:

- Float voltage measured at the battery terminals;
- Charger output current as expected and voltage within battery manufacturer's specified range;
- General appearance and cleanliness of the battery, battery rack or battery cabinet, and the battery area;
- Electrolyte levels adequate;
- No cracks in cells or evidence of electrolyte leakage;
- Any evidence of corrosion at terminals, connectors, racks, or cabinets; and
- Ambient temperature adequate and ventilation system operable.

5-1.6.2.3 **Quarterly.** Augment the monthly inspection with the following:

- Voltage measured of each cell; and
- Battery cell temperature at representative cells.

5-1.6.2.4 **Annually.** Augment the quarterly inspection with the following:

- Visual inspection of each cell;
- Evaluation of structural integrity of the battery rack or cabinet; and
- Measurement of cell-to-cell and terminal connection resistance or torque check in accordance with manufacturer's instructions.

5-1.6.2.5 **As Required.** Complete the following as specified:

- Record a complete set of specific-gravity readings upon initial installation and after two years of service;
- If the battery has experienced an abnormal condition, perform an annual inspection to verify that the battery has not been damaged. Refer to IEEE 450 for additional guidance for abnormal conditions; and

- Schedule for a battery replacement every 12 years. In lieu of a battery replacement, it is acceptable to perform the IEEE 450 battery capacity test every two years after the battery has been in service for 10 years. If capacity tests are performed, replace the battery when capacity falls below 80% of rated capacity.

5-1.6.3 Valve Regulated Lead Acid (VRLA) Batteries.

Perform battery inspections, tests, and maintenance in accordance with IEEE Std 1188 as modified below. Correct deficient items as they are discovered.

5-1.6.3.1 Weekly. Verify the battery charger(s) is operating at the battery float voltage within battery manufacturer's specified range.

5-1.6.3.2 Monthly. Check and record the following:

- Float voltage measured at the battery terminals;
- Charger output current as expected and voltage within battery manufacturer's specified range;
- General appearance and cleanliness of the battery, battery rack or battery cabinet, and the battery area;
- No cracks in cells or evidence of electrolyte leakage;
- Any evidence of corrosion at terminals, connectors, racks, or cabinets;
- Any evidence of cell/unit jar or cover distortion; and
- Ambient temperature adequate and ventilation system operable. *Note: a high ambient temperature can lead to battery thermal runaway. Correct the high temperature condition immediately.*

5-1.6.3.3 Quarterly. Augment the monthly inspection quarterly with the following:

- Measurement of cell/unit internal ohmic measurement. Typically, a change of 30% to 50% from a baseline is considered significant. Evaluate any measurements indicating a high internal resistance and replace the cell/unit, if needed;
- Temperature of the negative terminal of each cell/unit of battery; and
- Voltage of each cell/unit.

5-1.6.3.4 Annually. Augment the quarterly inspection annually with the following:

- Measurement of cell-to-cell and terminal connection resistance or torque check in accordance with manufacturer's instructions.

5-1.6.3.5 As Required. Complete the following as required:

- If the battery has experienced an abnormal condition, perform an annual inspection to verify that the battery has not been damaged. Refer to IEEE 1188 for additional guidance for abnormal conditions; and

- Perform a performance test of the battery capacity in accordance with IEEE 1188 after the battery has been in service for three years and every two years thereafter. Alternately, replace the battery after three years of service. If capacity tests are performed, replace the battery when capacity falls below 80% of rated capacity.

5-1.6.4 Nickel Cadmium Batteries.

Perform battery inspections, tests, and maintenance in accordance with IEEE Std 1106 as modified below. Correct deficient items as they are discovered.

5-1.6.4.1 Weekly. Verify the battery charger(s) is operating at the battery float voltage within battery manufacturer's specified range.

5-1.6.4.2 Quarterly. Check and record the following:

- Float voltage measured at the battery terminals;

- Charger output current as expected and voltage within battery manufacturer's specified range;

- General appearance and cleanliness of the battery, battery rack or battery cabinet, and the battery area;

- Electrolyte levels adequate;

- No cracks in cells or evidence of electrolyte leakage;

- Any evidence of corrosion at terminals, connectors, racks, or cabinets; and

- Ambient temperature adequate and ventilation system operable.

5-1.6.4.3 Semi-Annually. Augment the quarterly inspection semi-annually with the following:

- Voltage measured of each cell.

5-1.6.4.4 Annually. Augment the semi-annual inspection annually with the following:

- Evaluation of structural integrity of the battery rack or cabinet; and
- Measurement of cell-to-cell and terminal connection resistance or torque check in accordance with manufacturer's instructions.

5-1.6.4.5 As Required. Complete the following as required:

- If the battery has experienced an abnormal condition, perform an annual inspection to verify that the battery has not been damaged. Refer to IEEE 1106 for additional guidance for abnormal conditions; and
- Schedule for a battery replacement every 15 years. In lieu of a battery replacement, it is acceptable to perform the IEEE 1106 battery capacity test every two years after the battery has been in service for 12 years. If capacity tests are performed, replace the battery when capacity falls below 80% of rated capacity.

5-1.7 Instrument Transformers.

The basic difference between current and potential transformers must be observed. A voltage transformer should never be short circuited. A current transformer requires the secondary circuit always be closed. Under no circumstances open the secondary of a current transformer while the primary circuit of the transformer is energized unless the terminals of the current transformer are of the short circuiting type. Schedule instrument transformers for a maintenance inspection every 2 years. In addition, inspect visually any time the apparatus with which they are associated is inspected, but not less than every 6 months.

Maintain the bushings and terminals of an instrument transformer as described in the NETA maintenance guide. Inspect the case or tank for evidence of corrosion and leaks. Tighten all loose joints in conduit around fittings, terminal boxes and supporting clamps. Clean and paint corroded areas. Verify tightness of all bolted connections. Verify that wiring, grounding and shorting connections provide good contact. Test the proper operation of the voltage transformer withdrawal mechanisms (tip out) and grounding operation. Accomplish instrument transformers electrical testing per NETA standards.

5-1.8 Capacitors and Inductors.

Capacitors:

- Observe the condition of fuses;
- Inspect for damaged tanks and bushings and for leakage of the dielectric; and
- Recommended intervals and requirements.

Inductors:

- Very few inductors exist in military primary distribution systems.

5-1.9 Insulators.

Examine insulators for cracks, chips, breaks, and evidence of tracking or flashover. Replace bad insulators. Clean insulators to remove any contaminating materials that may be present. Report the presence of an excessive amount of contamination to the supervisor as it may require corrective measures.

Check mountings for evidence of rust and corrosion and to ensure proper alignment and securement. Ground connections must be tight.

5-1.10 Bushings.

Information in this section pertains to bushings on such substation apparatus as power transformer, sulfur hexafluoride (SF6) and oil circuit breakers, and high-voltage instrument transformers. Bushings are always an integral part of a specific apparatus and should be inspected along with that apparatus.

- Examine bushings for cracks, chips, breaks, and evidence of tracking or flashover. Replace bad bushings. Clean bushings to remove any contaminating materials that may be present. Report the presence of an excessive amount of contamination to the supervisor as it may require corrective measures, and
- Check mountings for evidence of rust and corrosion and to ensure proper alignment and securement. Ground connections must be tight.

Power factor testing of a bushing is an indication of the effectiveness of the insulation to function properly. Power-factor test bushings at the time of installation and at regular intervals. Follow IEEE Std 62.

5-1.11 Bus Structures.

A bus structure is an assembly of bus conductors with associated connection joints and insulating supports. It can have bare or insulated conductors. A busway is a grounded metal enclosure, containing factory-mounted, bare or insulated conductors, which are usually copper or aluminum bars, rods, or tubes. Each serves as a common connection between two or more circuits.

- Schedule bus structures visual inspections at regular intervals. Joints on bus structures need regular visual and infrared inspections;

- Bus cleaning is limited primarily to that of eliminating excessive contamination from the supporting insulators. It is not necessary to remove corrosion from the conductors except where it either affects contact resistance of connections or can lead to deterioration of conductors; and

Generally, no testing is required in connection with a bus structure other than infrared.

5-1.12 Terminations.

Inspect and test terminations and connections on a regular basis. Infrared thermography can provide a non-contact means of online evaluation of “hot spots” in an energized system. When a loose or corrosive connection is present under loaded conditions, the infrared viewer can detect the temperature difference between the connection and the surrounding conductors:

- When doing infrared scanning, take into account the following considerations. Infrared scanning surveys should be done during periods of maximum possible loadings, but not less than 40% of rated load of the electrical equipment being inspected. However, since many systems are not loaded to this level, the most important understanding is to measure when there is an adequate temperature difference for the scanner to detect. Try to measure at maximum possible loading, referring back to the seasonal loading chart regarding when to schedule; and

- Inspect distribution systems with imaging equipment capable of detecting a minimum temperature difference of 1 ^{0}C at 30 ^{0}C.

Ultrasound is another method of testing and evaluating terminations on a system that is energized. Ultrasound detectors are used to detect inaudible noises on equipment that could indicate potential problems:

- Test on an annual basis.

5-1.13 Grounding.

Grounding is an essential part of protecting staff and equipment from high potential caused by electrical faults. Grounding conductors of switchyard equipment and gate structures are subject to failure due to corrosion, loose connections, and mechanical damage. Grounding also may be compromised during equipment addition and removal or other construction type activities. Verifying grounding system integrity through periodic testing is an important maintenance activity:

- Check all accessible ground connections for secureness, and measure the overall ground grid resistance if it has not been done for a number of years. Since it is desirable to disconnect shield wire grounds and system neutral connections to make this measurement, de-energize the total substation for these tests. Perform visual and mechanical inspections annually. Test grounding electrode and substation/switchyard grid every 6 years (Table 5-5); and

Table 5-5 Battery Monitor System Maintenance

Maintenance or Test	Recommended Interval
Visual/physical inspection	Annually
Grounding electrode and substation/switchyard grid tests	6 years
Ground loop impedance test	6 years

- Comply with IEEE 80, IEEE 1246, and IEEE 837.

5-1.14 Fences.

Metal fences must be properly grounded and bonded. Fences, physical protection, enclosures or other protective means, where required to guard against unauthorized access or accidental contact with exposed energized conductors and circuit parts, will be maintained. Bond across all gate opening and gaps of fences from fence post to post.

5-1.14.1 Grounding.

The grounding connections will be made either to the enclosed equipment grounding system or to a separate ground:

- Fences will be grounded at each side of a gate or other opening;

- Gates will be bonded to the grounding conductor, jumper or fence;
- A buried bonding jumper will be used to bond across a gate or the opening in the fence, unless a non-conducting fence section is used;
- If barbed wire strands are used above the fence fabric, the barbed wire strands will be bonded to the grounding conductor, jumper or fence;
- When fence posts are of conducting material, the grounding conductor will be connected to the fence post or posts, as required, with suitable connecting means; and
- When fence posts are of non-conducting material, suitable bonding connection will be made to the fence mesh strands and the barbed wire strands at each grounding conductor point.

5-1.14.2 Fence Structure.

The following are minimum inspection requirements:

- Check for minimal gap under the fence or under the gate. A reasonable rule of thumb would be less than 2 inches under the fence and 4 inches under the gate;
- Ensure the fence fabric is intact and there is no rust;
- Check that the barbed wire is taut;
- Ensure the gate latches are operable;
- Ensure flexible braid-type connections are intact;
- Verify that no wire fences are tied directly to the substation fence; and
- Recommend revised corrosion control intervals and requirements based upon observed local conditions.

5-1.14.3 Structural Grounding Maintenance.

Fence maintenance consists of material preservation, maintenance of structural integrity, and maintenance of a good ground. The following procedures are recommended:

- Material preservation. In noncorrosive locations, double-dipped (ASTM A 90, Class II) hot dipped galvanizing on chain-link fences will normally furnish adequate protection for many years. In corrosive locations, use of

an aluminized fabric is the preferred installation. Wood fences are not usually considered to provide adequate security for substations. Consider replacement with chain-link fencing. Screening, if required, can be provided with privacy slats of polyester-fiberglass or aluminum;

- Structural integrity. Security requires that structure integrity be maintained by replacing damaged posts or other materials as required. Keep chain-link fencing taut. Replace spalling or broken components of masonry fencing;

- Grounding. Grounding must be maintained as a safety feature. Make visual inspections as a part of the monthly inspections, especially at the gate bonding straps. Periodically test and correct defects immediately; and

- Comply with UF 3-550-01 for policy and guidance for design criteria and standards for electrical power and distribution systems.

5-1.15 Lightning Protection.

5-1.15.1 Surge Arrestors.

Modern surge arresters require little operational maintenance and the degree to which such maintenance can be done is normally limited by lack of adequate test equipment. This limits surge arrester maintenance to visual inspection and simple electrical tests. It is recommended that defective units be replaced rather than repaired. Where an arrester is composed of two or more individually complete units, test each unit separately to allow bad unit replacement and retaining good units. Surge arresters are almost always applied with one terminal connected to an electrically energized source and one terminal to ground. No work is allowed on, or contact made with, surge arresters connected to the energized source.

5-1.15.1.1 Visual Inspections.

Periodically visual inspect to ensure that:

- The line lead is securely fastened to the line conductor and the arrester;

- The ground lead is securely fastened to the arrester terminal and ground;

- The arrester housing is clean and free from cracks, chips, or evidence of external flashover;

- The arrester is located in such a manner as not to be subject to:

  - Damaging fumes or vapors

- Excessive dirt or other current-conducting deposits
- Excessive humidity, moisture, dripping water, steam, or salt spray
- Abnormal vibrations or shocks
- Ambient temperatures in excess of 40° C

- Any external gaps are free from foreign objects and set at proper spacing.

5-1.15.1.2 Electrical Tests.

Visual inspection will not always detect a damaged arrester. Interior damage may result from a broken element, presence of moisture, a severe direct lightning stroke, or the use of an arrester with an incorrect rating. Sometimes these conditions will cause radio interference. Electrical tests, to detect inferior arrester units, may be made either in the field or shop. Tests must be made strictly in accordance with manufacturer's recommendations and the results interpreted in line with manufacturer's criteria:

- Power factor tests. Each type and class of lightning arrester has a specific power factor when new. Periodic testing of a unit will show little deviation from the original (when new) power factor so long as it remains in good operating condition. A major deviation from the original value indicates that the arrester has been mechanically damaged or contains moisture;

- Insulation resistance testing tests. An insulation resistance test can be made to provide additional information on the condition of an arrester. Such a test may indicate shorted valve elements in valve-type arresters; and

- Operation tests. Electrical tests to determine 60 Hz breakdown and leakage current may be made in the field or shop, but must be made cautiously to avoid damage to the arrester. It is questionable whether these tests can be justified for military installations, where the number of arresters potentially subject to such tests is relatively small.

5-1.15.2 Grounding Electrodes.

All grounding electrodes used for grounding of the power system, grounding of communication systems, and grounding of lightning protection systems will be effectively and permanently bonded to each other as required by the National Electric Code (NEC) and NFPA 780.

5-1.15.3 Lightning Protection – Downcomers and Air Terminals.

Lightning protection is intended primarily to dissipate the energy from a lightning strike in a manner that is safe for personnel and that causes the least amount of equipment damage. The lightning protection system may have multiple interconnections with building steel and the power system ground. Since lightning is a cloud to earth phenomenon, the resistance between the lightning protection/power system ground point the outside earth is an important factor. NFPA 780 recommended guidelines for the maintenance of the lightning protection system be provided to the owner (mission) at the completion of installation.

5-1.15.3.1 Inspection.

It is understood that all new lightning protection systems must be inspected following completion of their installation. Recommended guidelines for the maintenance of the lightning protection system are provided to the owner at the completion of installation. In addition to regular periodic inspections, inspect the lightning protection system whenever any alterations or repairs are made to a protected structure, as well as following any known lightning discharge to the system.

It is recommended that lightning protection systems be visually inspected at least annually. In some areas where severe climatic changes occur, it is advisable to visually inspect systems semiannually or following extreme changes in ambient temperatures:

- Complete, in-depth inspections of all systems every 3 to 5 years. It is recommended that critical systems be inspected every 1 to 3 years, depending on occupancy or the environment where the protected structure is located; and

- Complete testing and inspection includes the visual inspections.

5-1.15.3.2 Maintenance.

Maintenance of a lightning protection system is extremely important even though the lightning protection design engineer has taken special precautions to provide corrosion protection and has sized the components according to their particular exposure to lightning damage. Many system components tend to lose their effectiveness over the years because of corrosion factors, weather-related damage, and stroke damage. The physical as well as the electrical characteristics of the lightning protection system must be maintained in order to remain in compliance with design requirements:

- Establish lightning protection system maintenance procedures for each system and include as part of the overall maintenance program for the structure that it protects; and

- Keep complete records all maintenance procedures and routines and of corrective actions that have been or will be taken. Such records provide a means of evaluating system components and their installation. They also serve as a basis for reviewing maintenance procedures as well as updating preventive maintenance programs.

5-1.16 Structure Maintenance / Corrosion Control.

Inspect all structures in close proximity to buses, energized portions of equipment, etc., and make necessary repairs to galvanizing and painted surfaces. Test paint for hazardous material, i.e. lead, before disturbing. If lead based paint is confirmed, follow applicable handling/abatement procedures.

5-1.16.1 Material Preservation – Galvanizing.

In noncorrosive locations, the protective coating produced by the galvanizing process is normally a long-lived coating; however, the coating will eventually fail and rust will appear. It has been observed that ASTM A 90, Class II hot-dipped galvanizing in rural locations will normally furnish adequate protection for many years. The life of the coating on structural steel used in substations should generally be longer than 12 years, except possibly for upper flat surfaces of horizontal members. Any failure of the coating will usually occur in spots rather than over an entire surface. The following procedure is recommended:

- Clean the surface with a wire brush or by other mechanical means to remove rust and dirt. If the surface is contaminated with grease or oil, use a solvent to remove those contaminants. Mineral spirits or a weak solution of trisodium phosphate can be used as the solvent. A solution of 1 ounce of trisodium phosphate to 1 gallon of warm water is suggested for cleaning the metal. In the event that it is uneconomical or impractical to remove all rust, a reasonably satisfactory job can be obtained by deactivating the rust through chemical treatment. A weak solution of phosphoric acid is suggested for deactivating rust. Use proper skin and eye protection;

- Apply a priming coat to the clear dry surface using a zinc dust–zinc oxide paint. Allow ample time for the paint to dry before applying the finish coats; and

- Apply two finish coats using the same type of paint as was used for priming. Allow ample drying time between finish coats. One finish coat is needed for areas on which the galvanized coating remains intact. The color of the paint is gray, but colors in oil may be added to the finish coats to obtain other shades. Other paints normally used as final coats for metal (such as aluminum paint) may be used as the final coat in place of the zinc dust–zinc oxide paint.

In corrosive locations, use of an aluminized fabric is a preferred installation.

5-1.16.2 Material Preservation – Painting.

Most steel for indoor substations, and some steel for outdoor substations, is not galvanized and paint is used for preservation. If required spot painted covers more than 5 percent of the visible surfaces, paint the entire structure. It is recommended that painting of outdoor metalwork be done only when the temperature is above 7.2 ^{0}C (45 ^{0}F) and when the relative humidity is below 80 percent. The durability of paint coating depends on thickness, cohesion, and continuity. Generally, 5 mils (0.005 inch) is an adequate thickness. The thickness should be uniform, and paint should not be easily scraped off the metal. Pay particular attention to welds, edges, and other hard-to-coat areas. Structures of aluminum alloy normally need no surface protection. Painting of aluminum alloy members is not recommended except where esthetics is of prime importance.

- Test paint for hazardous material, i.e. lead, before disturbing. If lead based paint is confirmed, follow applicable handling/abatement procedures.

- Thoroughly remove all loose paint, blisters, and scale. Where the condition of the finish is poor remove the paint entirely. Wire brushing, sand papering, or scraping is desirable where only partial surface cleaning is necessary. Paint removers will soften and aid in removal. However, neutralize the paint remover before attempting to paint. For removal of oil and dirt, use weak solvents such as mineral spirits, other petroleum thinners, or turpentine substitutes.

- Paint as soon as possible after cleaning. Cover all bare metal with a primer. Where only chalking has occurred, one finish coat is sufficient. Primer and finish paints may be obtained from most equipment manufacturers and sometimes from local sources. A zinc chromate alkyd resin primer followed by an alkyd base paint is a suitable air-dry combination for exterior surfaces. Allow the primer coat to air-dry thoroughly and follow it with two finish coats with sufficient time allowed between coats for drying.

5-1.16.3 Material Preservation – Wood Structures.

Inspect and treat permanent wood structures.

5-1.16.4 Material Preservation – Concrete for Structure Foundation.

Visually check concrete during the course of other maintenance and repair. Repair cracks wider than about 1/16th of an inch (0.16 mm) with a sand-cement grout. Replace badly deteriorated concrete.

5-1.16.5 Structure Connections and Joints.

Regardless of material, check all connections and joints periodically for tightness of fastening hardware. Tighten or replace loose, broken, or missing parts as required to maintain a rigid structure.

5-1.17 Substation Yards.

In some cases, there may be no outdoor yard in connection with a substation. These are exceptional situations, and most substations will have an adjoining yard. Removal of vegetation, elimination of low spots in the yard, and control of grassed areas is necessary. If grass is permitted, careful maintenance is necessary both for esthetics and safety reasons. Where chemical application for removal of vegetation is required, comply with environmental requirements.

Do not permit miscellaneous storage except for those specific areas reserved for this purpose. Ensure allowed storage does not to interfere with operations and items are stored in a protected, tidy, and accessible manner.

5-1.17.1 Fences.

Fence maintenance consists of material preservation, maintenance of structural integrity, and maintenance of a good ground.

5-1.17.2 Warning Signs.

Place warning signs conforming to OSHA standards and state the voltage on each fence gate, on each substation building door accessible from outside the yard, and at intervals along the fence. At least one sign must be visible from any position along the fence. Check location and legibility of all signs as part of the monthly inspections.

5-1.18 Wildlife Deterrents.

Apply IEEE Std 1264 for the control of wildlife and birds around substations.

5-1.19 Frequency Converters (Motor-Generator (MG) Sets) and Synchronous Condenser.

For MG sets and synchronous condensers, ensure the lubrication oil or grease is installed and maintained according to manufacturer's instructions for type. Many oils and greases are not compatible with each other and if mixed may form sludge or acids, wrecking the lubricant and pitting the bearings.

Electrical tests for these devices are comparable to those for motors of the same voltage. Perform a dielectric withstand voltage test on each pole. High potential testing is not recommended for MG sets or for synchronous condensers. Determine test

frequency by operating conditions. Dusty, high-humidity conditions require more frequent testing than clean, dry conditions. A machine in a dry atmosphere may be down for several months without absorbing moisture, while a device on an island might absorb sufficient moisture while being down for one week to fail during start-up. Items to check include: bearings, noise (clues to bearing life), lubrication, and every three years – insulation tests.

5-2 MEDIUM VOLTAGE (MV) DISTRIBUTION.

5-2.1 Overhead Distribution.

Refer to Chapter 6 for requirements associated with working on overhead distribution. Chapter 6 addresses the following topics related to operation of the overhead distribution system:

- Qualified worker qualification requirements;
- Pole handling, installation, replacement, and removal;
- Pole climbing;
- Line installation;
- Aerial rope and tools; and
- Tree trimming near energized aerial lines and overgrown vegetation surrounding equipment.

Refer to IEEE Std C135.90 as a guide for all types of hardware used for overhead distribution systems.

5-2.1.1 Power Poles.

Identification.

Develop a naming convention for power poles and label each pole with its identification number. Use this number for identification on electrical distribution system drawings and for the GeoBase data system.

5-2.1.1.1 Record Keeping. Maintain records that contain the following information:

- Identification number;
- Location (can be a GPS location included in the GeoBase documentation);
- Date of installation; and

- Manufacturer and brand.

Wood Pole Inspection Frequency.

The average life span of a full-length pressure-treated wood pole can be maintained and even extended another 10 to 20 years with a proper inspection, treatment, and reinforcement program.

Perform pole inspections at the following frequency:

- Visual inspection of pole line – annually. Drive along each pole line to observe problems such as pole degradation, leaning poles, sagging lines, damaged cross-arms, blown surge arresters, open fused cutouts, or leaking pole-mounted equipment;

- Spot check of 10% of power poles – approximately every 5 years. Perform a detailed inspection of selected power poles. Apply the inspection data to determine if a 100% inspection is required and to identify any poles requiring replacement; and

- Full inspection – Perform a detailed inspection of all power poles every 12 years or as required by results of a spot inspection.

Wood Pole Visual Inspection.

Perform the following visual inspection as part of a general inspection, spot check, or full inspection. Examine each pole for the following defects:

- Excessive checking, cracking, or splitting;

- Evidence of woodpecker holes or insect colonies;

- Excessive above-ground decay;

- Lightning damage;

- Corroded or damaged guying;

- Damaged bracing;

- Leaning pole requiring resetting; and

- Any other obvious defects.

Evaluate each pole for the following additional problems:

- Sagging lines that require re-tensioning;

- Damaged cross-arms;
- Blown surge arresters;
- Open fused cutouts; and
- Leaking pole-mounted equipment.

5-2.1.1.2 Wood Pole Detailed Inspection.

Perform the following as part of a spot check or full inspection. Examine each pole for the following defects:

- External decay. Where surface decay is found at the ground line, excavate around the deteriorated section of the pole. Measure and record the pole circumference at the ground line, remove the surface decay down to sound wood, and record the new circumference of the pole;
- Internal decay. Inspection methods include sounding and boring when necessary. The sounding test is fast and completely nondestructive, but it will not reveal the extent and type of defect. It will not indicate whether the pole has a harmless void or a large and dangerous decay pocket. Boring will reveal details on the type and severity of decay but it is rather slow, somewhat destructive, and may conceivably introduce decay-causing organisms into a sound pole; and
- Pole top and cross-arm defects. Either use bucket truck or climb pole if a visual inspection from grade is indeterminate.

5-2.1.1.3 Wood Pole Maintenance Crew Instructions.

Provide crews used for pole inspections with instruction and training regarding inspection precautions, duties, safety requirements, and use of equipment. Review available pole history before starting. The duties of the crew include observing the pole tops, cross arms, and attachments; inspecting the pole to a height that can be conveniently reached from the ground; excavating and inspecting the pole below the ground line; applying ground line treatment; keeping accurate records; and associated work.

Replace or reinforce any pole that has lost strength from decay or other cause to the point of being hazardous.

5-2.1.1.4 Wood Pole Cross Arms and Structures.

Properly installed cross arms require little maintenance. Cross arms can decay; aging can cause separations such as checks or shakes; lightning can splinter cross arms; or they may twist or bend by overload. These conditions may require replacement.

Evaluate cross arms as part of each pole inspection. Check cross arms for any damage caused by lightning, woodpeckers, or other causes. Inspect for checks, splits, or decay pockets, particularly at holes bored through the arm. Replace cross arms when defects are discovered.

5-2.1.1.5 Concrete Poles.

Reinforced or pre-stressed concrete poles have a projected life of 60 to 80 years and require no attention except for replacement when damaged. Concrete poles are preferred under conditions where the life of wood poles would be unduly shortened by decay or pests.

5-2.1.2 Insulators.

If insulators require cleaning to remove contaminants, apply IEEE Std 957 for cleaning of insulators for energized and de-energized circuits.

5-2.1.3 Reclosers.

Reclosers require maintenance when they have operated the equivalent of a rated duty cycle, where a rated duty cycle is defined as the maximum number of fault interruptions a recloser is capable of performing before servicing is required. Manufacturers provide the rated duty cycle in their product literature and the duty cycle vary for each recloser type or model. In general, vacuum interrupters have a higher duty cycle compared to oil interrupters. At the completion of a duty cycle, the following can be expected:

- Oil-interrupting recloser: The interrupter assemblies, stationary contacts, and movable contacts will be badly eroded and burned. The condition of the insulating oil will be of poor quality; it will be black and dirty, with a significant amount of sludge (carbon buildup) covering the recloser's internal components. Unwanted by-products, including water, will be present in the oil; and

- Vacuum-interrupting recloser: The contacts will be eroded and worn and the vacuum interrupters will require replacement. Insulating oil will not be degraded because the arc is contained with the vacuum interrupters. But, the oil will require replacement or filtering as it might have reduced dielectric strength. Also, there might be water present in the oil.

Maintain a record of the recloser operations. If the information is available at the substation or switching station, maintain a record of fault current date, time, and magnitude for comparison to the rated duty cycle capability. Newer recloser control units also offer event recording capability. If available, review recloser control event data for comparison to the duty cycle rating.

5-2.1.3.1 Oil-Interrupting Reclosers.

Maintain oil-interrupting reclosers in accordance with the manufacturer's instructions at the following intervals:

- Before the end of a rated duty cycle;
- At least every three years;
- More frequently than every three years if operating experience indicates poor internal contact and oil condition when checked; and
- More frequently than every three years if the recloser operates frequently and no records have been maintained that indicate the fault current associated with each recloser operation.

Reclosers require periodic maintenance. Manufacturers provide detailed inspection and test requirements for their reclosers. For older reclosers, consider replacement rather than maintenance. Also, manufacturers provide modernization instructions for some older reclosers.

5-2.1.3.2 Oil- or Air-Insulated Vacuum Interrupting Reclosers.

Maintain vacuum-interrupting reclosers in accordance with the manufacturer's instructions at the following intervals:

- Before the end of a rated duty cycle;
- At least every six years;
- More frequently than every six years if operating experience indicates poor internal contact and oil condition when checked; and
- More frequently than every six years if the recloser operates frequently and no records have been maintained that indicate the fault current associated with each recloser operation.

Reclosers require periodic maintenance. Manufacturers provide detailed inspection and test requirements for their reclosers. For older reclosers, consider replacement rather than maintenance. Also, manufacturers provide modernization instructions for some older reclosers.

5-2.1.3.3 Recloser Control Units.

If the recloser has a separate recloser control unit, which is typical for larger three-phase reclosers, perform a maintenance check on the recloser control unit at the same time that recloser maintenance is performed. Include the following:

- Perform maintenance and testing in accordance with the manufacturer's instructions. If the recloser control unit is obsolete, consider replacement with a new recloser control unit;

- Test the battery in accordance with the manufacturer's instructions. Replace the battery if it is older than 6 years or if battery testing indicates that the battery capacity is inadequate; and

- Confirm that the recloser control settings are as required by the most recent electrical coordination study. Change settings as required.

5-2.1.4 Fused Cutouts and Switches.

Select and replace fuses for overhead distribution systems in accordance with IEEE Std C37.48. Perform periodic maintenance on pole-mounted air switches in accordance with IEEE Std C37.35.

5-2.1.5 Transformers.

Pole-mounted distribution transformers require no periodic maintenance or testing. As part of the annual visual inspection of poles, visually inspect pole-mounted distribution transformers for the following:

- Evidence of oil leakage;

- Damaged surge arresters; and

- Excessive corrosion.

Correct problems as they are discovered.

5-2.1.6 Conductors and Splicing.

Apply IEEE Std 1283 for the evaluation of overhead conductors and accessories in high-temperature locations.

5-2.1.7 Lightning and Surge Arresters.

Select and install surge arresters for overhead distribution systems in accordance with Section 6 of IEEE Std C62.22. Apply IEEE Std 1410 as a guide for maintaining the lightning resistance of the overhead distribution system.

5-2.1.8 Tree Trimming.

Evaluate all overhead distribution system lines annually for the need for tree trimming. Refer to Section 6-14 for tree trimming procedures.

5-2.1.9 Wildlife.

Apply IEEE Std 1651 as a guide for maintaining the overhead distribution system.

5-2.2 Underground.

5-2.2.1 Cables and Splicing.

MV power cables are exposed to a variety of environmental and operational stressors, including elevated temperatures, high UV radiation, high humidity, water submersion, and exposure to dust, dirt and corrosive contaminants. Electromechanical forces resulting from the passage of high levels of short circuit current through a power cable can cause mechanical damage to cable jacket and insulation material and cable conductors. High-voltage stress from lightning strikes or power system transients can degrade the dielectric strength of cable insulation. For an acceptable range for different types of tests and specific trend analysis flags such as rate of change in resistance levels, refer to IEEE 400, IEEE 510 and ANSI/NEMA WC 74/ICEA S-93-639.

For cables that do fail early, the failure modes are typically attributed to:

- Partial discharge – localized electrical discharge that partially bridges the insulation and causes excessive heating and degradation of the cable insulating materials and ionization of the air in the vicinity of the leakage current;
- Treeing – tree-like erosion propagated by electrical discharges in a cable insulation or covering;
- Power workmanship – direct mechanical damage, such as bending, abrasion, cutting, contact, deformation and perforation resulting from installation or maintenance activities; and
- Vermin - rodents eating insulation.

The following maintenance tests and frequencies for MV power cables are recommended:

- Time-based preventive - equipment is off-line, de-energized and disconnected from service (planned major shutdown) (Table 5-6);

Table 5-6 Time-Based Preventive Tests

Test	Comments
DC hi-potential withstand test.	Relies on a source of high DC voltage.
	Simple, portable, inexpensive, low skills required to perform the test.
	Can be destructive when performed on service-aged MV cable insulation, misses certain types of insulation defects.
Alternating Current (AC) hi-potential withstand test.	Uses AC high voltage greater than the rated voltage of tested equipment.
	Good test for conductive and high-impedance defects in cables.
	Requires much larger power source and multiple personnel which makes it expensive.
Very Low-Frequency (VLF) withstand test.	Similar to AC hi-potential but at lower frequency.
	Simple, portable, inexpensive test equipment.
	Can aggravate existing insulation defects in aged extruded cables; considered a destructive test.
Power factor/dissipation factor condition assessment test – insulation power factor.	Most common test performed to determine condition of solid insulation.
	Moderately expensive, may require additional equipment.
VLF dissipation factor condition assessment test – “tan delta” test.	Simple, extremely portable, inexpensive to purchase and operate – true diagnostic test.
	At 60 Hz, can present inaccurate cable insulation assessments results.
Off-line partial discharge condition assessment test.	“Off-line PD testing” assesses power cables insulation, identifies electrical trees, contamination, delamination.
	Newer test; capable of testing up to 3 miles of power cable.
	Limited to power cables with continuous metallic shields, requires extensive outages, most costly to perform.
Thermography of underground terminations, elbows and splices.	Non-contact.

- Time-based predictive tests – equipment is online; electrical outage is cost prohibitive (Table 5.7);

Table 5-7 Time-Based Predictive Tests

Test	Comments
Online partial discharge condition assessment test	"Online PD test" performed while the equipment is energized at normal operating voltages; provides snapshot-in-time samples.
	Not calibrated, test results are not objective and have no comparable data to factory tests or IEEE standards.

- Recommended frequency of testing after installation acceptance test for "normal" class of service; and
  - First maintenance test – 3 years
  - Second maintenance test – 8-9 years
  - Period between succeeding maintenance test – 5-6 years
- Recommended frequency of testing after installation acceptance test for "critical" class of service:
  - First maintenance test – 12-18 months
  - Second maintenance test – 2-3 years
  - Period between succeeding maintenance test – 4-5 years

5-2.2.2 Lightning and Surge Arresters.

Surge arresters may be constructed as a gapped silicon-carbide or either a gapped or a gapless metal oxide. Metal-oxide surge arresters (MOSAs) should be considered for replacement when silicon-carbide types fail. Surge arresters are usually applied with one terminal connected to an electrically energized source and one terminal to ground. Review availability and use positive failure indication arrestors to replace failed arrestors. No work is allowed on, or contact made with, surge arresters connected to the energized source.

The following time-based preventive maintenance is recommended:

- Visual inspection – semi-annually;
- Clean insulator using cleaning agents and waxes in accordance with manufacturer's directions and check integrity of connections – 6 years; and

- Insulation resistance tests – 6 years:
  - Power frequency dielectric loss
  - DC insulation resistance
  - Power factor

5-2.2.3 Switches.

No work will be done on switches until both sides of each phase have been de-energized and properly grounded. Switches must be tested in the test position. If there is no test position (stationary interrupter switches) test after the interrupter switches have been de-energized and grounded.

The following time-based preventive maintenance is recommended:

- Visual inspection – semi-annually; and
  - Component inspection
  - Fuses and holders
  - Interrupter
  - Anchorage and grounding
- Major maintenance / overhaul function – 6 years:
  - Contact-resistance tests across each switch blade and fuse holder.
  - Insulation resistance tests on each pole phase-to-phase and phase-to-ground for one minute.

5-2.2.4 Transformers.

Oil-immersed, MV, pad-mounted transformers will be switched, de-energized and energized by trained personnel only. Completely isolate from sources of power transformers before being tested and inspected.

5-2.2.4.1 Time-Base Preventative Maintenance.

The following maintenance of transformer and accessories is recommended:

- Visually inspect transformer enclosure for rust and oil leaks every 2 years. Check and record gauges.

5-2.2.4.2 Time-Based Predictive Maintenance.

The following time-based predictive maintenance of transformer and accessories is highly recommended for mission critical transformers or primary installation substations (utility point of service). For non-mission critical transformer and accessories systems, perform visual inspections:

- Perform DGA oil test every 2 years; and
  - Take samples from the bottom for mineral oil-insulated units and from the top for less flammable liquid-insulated units.
  - Samples must be laboratory tested.
  - Acceptable test limit values for new and service-aged oil are given in IEEE 57.106.
- Check for hot spots using thermography every 2 years. Use IR equipment capable of detecting at least 1 ^{0}C temperature difference between the object and the 30 ^{0}C reference area by detecting emitted radiation and converting it to a visual signal. Scan all current-carrying equipment and conductor connections during periods of maximum possible loading. Always measure the IR temperature from several different positions to minimize errors from reflected IR energy or from solar gain for outdoor installations.

5-2.2.4.3 Corrective Maintenance.

The following corrective maintenance of transformer and accessories is recommended:

- Oil treatment:
  - Particle filtration
  - Drying
  - Outgassing
  - Cleanup and depollution
  - Oil replacement, recycling and PCB decontamination
- On-site repairs:
  - Leakages
  - Gasket replacements

- Improvement of contact resistances

5-2.2.5 Manholes and Handholes.

Underground junction boxes and vaults inspections every 5 years is suggested to determine deterioration and degradation of the junction boxes and associated wiring and supports. Check for termite infestations and include treatment for termites within manholes if found. Some base safety requirements allow entry into energized manholes for purposes of inspection only and some locations will not allow this. This must be handled safely on a case by case basis in accordance with procedures already in place.

5-2.3 Ground Systems.

Grounding is an essential part of protecting staff and equipment from high potential caused by electrical faults. Grounding conductors of switchyard equipment and gate structures are subject to failure due to corrosion, loose connections, and mechanical damage. Grounding also may be compromised during equipment addition and removal or other construction type activities. Verifying grounding system integrity through periodic testing is an important maintenance activity.

Check all accessible ground connections for secureness, and measure the overall ground grid resistance if it has not been done for a number of years. Since it is desirable to disconnect shield wire grounds and system neutral connections to make this measurement, de-energized the total substation for these tests.

- Perform visual and mechanical inspections annually. Perform grounding electrode and substation/switchyard grid tests every 6 years.

5-2.4 Metering.

Electrical meters are devices used to measure and register the cumulative value of electrical quantities with respect to time.

Routine maintenance tests are required annually and to cover the following:

- Cleanliness, connections, calibration;
- Multipliers;
- Alignment, damage, freedom of movement; and,
- Contacts.

5-2.5 Animal Control.

Apply IEEE 1264 for wildlife deterrents.

5-3 ROADWAY/STREET/PARKING AREA LIGHTING.

5-3.1 Voltage Level.

Street lighting circuits might be either low-voltage multiple circuits or high-voltage series circuits. It is important that the type of circuit be identified and placed in an electrically safe work condition before starting work because of the different voltage levels involved. Workers must wear PPE in accordance with UFM 3-560-01 when working on street lighting circuits.

5-3.2 Clearance Requirements.

Street lighting lines, fixtures, and wires must be considered energized, which requires wearing personnel protective equipment, unless a Safe Clearance permit is obtained and the line grounded. The voltage of street lighting circuit must be treated as that of the highest voltage occupying any of the poles on which the street lighting circuit is run.

5-3.3 Multiple Street Lighting Circuits.

Multiple street lighting circuits must be treated with the same precautions as the circuits to which they are connected, unless the circuit is located on a structure with a higher voltage wire, in which case it must be considered as the higher voltage level.

5-3.4 Series Street Lighting Circuits.

Before a series street lighting circuit is opened and work is performed, the following procedures must be followed:

- Disconnect the circuit from the source of supply by opening disconnecting switches or other cutouts in accordance with a Safe Clearance permit and lockout-tag out equipment. Do not depend on time switches or other automatic devices;

- Jumper the circuit to avoid an open-circuit condition; and

- In replacing street light bulbs and lamp globes in street lighting brackets, there is danger of an arc developing and causing serious damage and injury if the spring clips in the receptacle do not make contact. These springs might have been heated to the extent that they have lost their temper, or for some other reason, do not close the circuit when the lamp socket is pulled out. Use approved changers with at least 6 ft (1.8 m) handles for replacing lamps on series street lighting circuits. Workers must wear appropriate PPE when removing or installing lamps where lamp changers cannot be used.

5-3.5 Climbing Space.

Maintain safe access by hanging street lighting fixtures clear of the climbing space. All bolts, lag screws, and other hardware used in securing the fixtures must be cut, filed, or coated to eliminate sharp or protruding edges or points.

5-3.6 Time Switches.

When winding time switches and working on automatic time switches, workers must not trip the switch “on” without first pulling the transformer disconnects or first making sure that street lighting circuits cannot be energized. On time clocks with high-voltage connections, workers must always wear rubber gloves and appropriate personal protective equipment when winding, resetting, or otherwise maintaining the clock.

5-4 DISTRIBUTED GENERATION.

The same O&M concepts and requirements that apply to utility generated electrical distribution systems are directly applicable to Distributed Generation Systems (DGS), with a few notable exceptions. DGS synchronization relaying and permitting must be approved by the local utility. Therefore, operations must notify the local utility whenever modifications are made to the system, or parts are taken out for maintenance, as this will affect the stability of their network if the distributed generation is not islanded, or operated as a stand-alone system. The primary interconnect requirements are stated in NEC article 705; however, each utility will have requirements far above or beyond these minimum requirements for DGS. For safety, when a distributed generation system is modified, or a planned disconnection or re-connection, notify the local utility in advance of action.

CHAPTER 6 WORKING ON OVERHEAD DISTRIBUTION

6-1 OVERHEAD DISTRIBUTION WORK.

This chapter includes specific requirements for poles and structures, pole-mounted equipment, and aerial lines. Requirements addressed include pole handling and erection, climbing and working on poles, stringing of lines, working around pole-mounted lighting and other equipment, tool handling, and tree and brush trimming adjacent to an aerial line right-of-way.

Note: Installations in California are governed by the California Public Utilities Commission General Order 95, Rules for Overhead Electric Line Construction.

6-1.1 Working in Elevated Positions.

Additional safety requirements are needed for overhead distribution work since climbing poles is often necessary. Not all work can be accomplished from aerial lifts. Electrical workers must both recognize electrical hazards, and be trained how to prevent falls. This includes training in safe climbing procedures when the structure design cannot accommodate optimum fall protection load requirements.

Comply with OSHA Standards (29 CFR 1910 and 1926) for fall protection when working in elevated conditions. Refer to IEEE Std 1307 and UFM 3-560-01 for additional guidance.

Note: For the Navy, follow the requirements outlined in the Department of the Navy Fall Protection Guide for Ashore Facilities, which can be obtained at https://navalsafetycommand.navy.mil/Portals/100/Documents/Fall_Protection_Guide.pdf

Note: For the Army, Department of the Army Pamphlet DA PAM 385-10 provides additional requirements regarding fall protection.

Note: For the Air Force, Air Force Instruction 91-203 provides additional requirements regarding fall protection.

6-1.2 Qualified Climber.

Only workers who meet “Qualified Climber” requirements are permitted to do work requiring climbing poles or trees. Each Activity must establish these requirements for both Activity personnel and contract personnel. The requirements apply to all persons whose work involves climbing.

6-1.3 Criteria for Qualified Climbers.

Comply with the requirements of OSHA 29 CFR 1910.269 (q) “Overhead Lines.” The majority of the work will be done in an elevated position above ground level. Climbing aerial line structures such as poles may be required. Situations with limited structure

access can prevent use of an aerial lift bucket truck. The structure design may not accommodate positive fall protection load requirements. Only workers who meet "Qualified Climber" requirements are permitted to do work which requires climbing poles or trees. Establish “Qualified Climber” requirements both for Activity personnel and for contract personnel, including the following:

- Physical fitness required for climbing – documented not only by an annual physical, but also be validated by supervisory observation;
- Climbing duties – included as a part of routine job activities, not an occasional occurrence;
- A minimum of 2 years of documented climbing training. Include hazard recognition and hands-on-training incorporating appropriate safe climbing practices and rescue training;
- Demonstrated proficiency is required on structure types similar to those that are to be climbed, showing that these structures have been climbed on a routine basis within the last 5 years; and
- A worker in training may function as qualified only when working under the direct supervision and observation of a “Qualified Climber.”

6-2 POLE HANDLING OPERATIONS.

Precautions are necessary in handling poles safely. Poles are long, heavy, and treated with potentially hazardous pesticides and preservatives. They pose hazards to the workers involved in installation and dismantling operations. Additionally, mistreatment of poles during installation may degrade their ability to meet service requirements, and could endanger those workers who climb them.

6-2.1 General.

The authorized individual-in-charge must either do it themselves or assign a crew member to direct the handling of poles and give all signals when poles are being lifted or handled. Poles must, whenever possible, be handled starting from the top and the end of the stack. Workers must roll poles away from them using cant hooks or bars. Poles must not be caught with cant hooks while in motion. Whenever possible, carrying hooks must be used when carrying poles.

6-2.2 Pole Contact Precautions.

Creosote is applied to poles as a preservative and can cause skin burns on contact. Take the following precautions to avoid burns:

- Keep arms covered with long sleeved shirts when handling poles;

- Always wear gloves;
- Keep neck well covered with a collar or a handkerchief;
- Keep trousers as long as practical to protect ankles;
- Never rub eyes or wipe perspiration from face using hands or shirtsleeves after they have been exposed to creosote; and
- Protect hands, arms, and face with a preparation made up of one part gum acacia or gum tragacanth, and three parts lanolin where direct contact with creosote is likely to occur. If this preparation cannot be obtained, acceptable protection can be provided by petroleum jelly (such as Vaseline™). First aid treatment must be obtained immediately when bare skin or eyes come in contact with creosote.

6-2.3 Receiving Pole Shipment.

Poles are usually shipped to an Activity's pole storage yard using flatbed railway cars on which they are secured with skids, stakes, slings, and binding. Removal is safe if done properly. The principal objectives are to unload poles so that none are broken, and so that the poles do not roll onto any worker. Perform the following:

- Skids, rope lines, and slings must preferably be 1/2 in or 5/8 in (12.5 to 16 mm) wire rope. Inspect before use to ensure they are in satisfactory condition for the operation;
- Inspect all binding wire, stakes, and other fastenings for weak or broken areas before unloading;
- Always preposition lines as necessary to restrain loads when stakes and binding wires are cut;
- The authorized individual-in-charge must determine that all workers are safely in the clear before permitting binders or stakes are cut;
- Cut binding wires with long-handled wire cutters. Never cut binders from the top of the load; and
- Only one person is permitted on top of a loaded car at a time. No one is allowed on top of a carload of poles to cut wires, or if any wires or braces have been cut or removed.

6-2.4 Ground Handling.

Once on the ground the poles can be positioned by the use of cant hooks. Special precautions must be taken while using these hooks:

- Keep hooks sharp and protected when not in use;
- Inspect the hook bolt periodically for wear. If a worn hook bolt breaks in use, sudden and possibly severe injuries could result;
- Injuries most often occur when a pole handle breaks or the hook comes out. Be sure the hook is firmly set in the pole;
- The cant hook is a one-worker tool. It is likely to break if two workers double up. If a job requires two workers, two cant hooks must be used;
- Before moving the pole, make sure that there are no tripping hazards near the workers;
- Stand so the pole is rolled away. Pulling the pole allows the pole to roll on a foot or crush a leg;
- Be particularly careful if the pole is rolled over a hump, since the pole could roll back when the grip and position of the hook is changed; and
- When moving a pole by hand, with a pole cart, or with the truck derrick, warn anyone nearby who could possibly be struck. If necessary, station a worker with a red flag to warn or stop traffic.

6-2.5 Long Term Pole Storage.

- Poles that are stored for considerable periods must be stacked above the ground on racks. The racks must provide ventilation, and properly block the poles to keep them from shifting or rolling;
- Never store poles with cross-arms, braces, steps, or hardware attached;
- Store poles according to size and make them accessible; and
- Maintain an area around stored poles of at least 10 ft (3.0 m) free of grass and weeds. Provide sufficient space under poles to permit removal of leaves and debris.

6-2.6 Temporary Pole Storage.

- Poles stored temporarily on or near roadways, before erection or removal, must be placed as close as possible to the curb or edge of roadway as is safe; however, never store poles at points along the road where there are sharp turns. Do not place the poles where they interfere with traffic, driveways, or walkways;

- Place each pole so that its top points in the direction of traffic. Poles temporarily stored alongside highways must not have cross arms attached;

- When laid on an incline, poles must not be placed where they can interfere with drainage; and

- The authorized individual-in-charge must decide whether danger signs (by day) or red lights (at night) are required.

6-2.7 Hauling Poles.

- Pole hauling must be done in a manner to not endanger workers or the public;

- After being loaded on a vehicle, secure poles in at least two places and in such a manner to ensure poles will not be released when traveling over rough terrain. Never use a chain smaller than 3/8 in (9.5 mm) diameter;

- Assign a minimum of two workers (a driver and a helper) to haul a load of poles. The helper must assist the driver by watching traffic both from the sides and the rear. The helper must also check that there is ample clearance when turning corners, entering highways, or crossing intersections. When necessary, the helper acts as a flagman to warn and direct traffic; and

- Attach a warning device on poles extending more than 4 ft (1.2 m) beyond the back of a truck or trailer. Attach a red flag by day and a red light by night to the rear end of the poles being hauled. The red flag or light must be visible from the sides and rear. Observe all local and state highway regulations when poles are transported over off-base highways.

6-3 POLE INSTALLATION, REPLACEMENT, AND REMOVAL.

Poles for new aerial lines are often installed by contract workers; however, Activity workers might need to install poles to replace storm-damaged, insect-damaged, or decayed poles. Remember that poles and guys must be properly located relative to the local Activity property line or utility right-of-way.

This section provides guidance that applies mainly to wooden poles. Refer to IEEE Std 1025 for installation of concrete power poles.

6-3.1 Pole Holes.

Dig new holes if new poles are being set adjacent to existing poles being dismantled. Power tools are available for digging, such as power borers or augers, and only qualified personnel must use these tools. Rock cutting drills are generally a safer alternative than the use of explosives, where rock is encountered. Many pole holes can be dug by hand if power diggers are unavailable or cannot be used. The area where poles are being set must be scoped and all utilities identified and marked. Take special care when digging close to underground energized cables/circuits.

6-3.2 Digging Holes.

Digging a pole hole involves significant hazards that can cause major injuries. These hazards range from electrocution, shock, vehicular hazards, crushing injuries, eye injuries from flying dirt and rocks, blisters on the hands from the use of hand tools, and foot and leg injuries resulting from falling over tools, particularly shovels that have been left turned up.

6-3.3 Covering a Hole.

Cover all open pole holes as soon as they are dug when other related work must continue near the hole, except when the pole is being immediately set into the hole after digging. Install covers that are at least 30 in (760 mm) in diameter and strong enough to support two men. Place four or five shovels of soil on the cover after it is placed over the hole. If necessary, also set up cones to secure the area.

6-3.4 Hole Casings.

Casings may be required in sandy or swampy soil to prevent the sides of a hole from caving in. Casing covers are required if the pole setting is not done immediately.

6-3.5 Setting Poles.

Pole setting is a hazardous job even with experienced personnel using the best equipment. The methods authorized for manually setting poles are:

- The pike pole method;
- The winch line method; and
- The gin pole method.

The use of a line truck is the preferred method whenever possible.

6-3.5.2 Pike Pole Method.

Figure 6-1 illustrates the pike pole method. This is the earliest method of raising poles and might be used when a truck cannot be brought in. A jenny initially supports the pole, and a cant hook keeps the pole from rolling. The bump board protects the wall of the hole from being caved in by the pole butt. Pikers lift the line pole by punching into the pole, the steel spikes of the pike poles. The number of pikers required increases with the pole length as shown in Table 6-1.

Table 6-1 Average Crew Size Required to Raise Poles by Piking

Pole Length		Size of Crew	Number of Pikers	Number of Jennymen	Number of Personnel at Butt
Feet	Meters				
25	7.5	5	3	1	1
30	9.0	6	4	1	1
35	10.5	7	5	1	1
40	12.0	8	6	1	1
45	13.5	9	7	1	1
50	15.0	10	8	1	1

6-3.5.2.1 Preparation.

Before setting a pole, the authorized individual-in-charge must ensure there is a clear working space and that all movable obstacles are removed from the area. Personnel must not wear safety harnesses, climbing belts, or climbers when setting poles. Tools or other items must not be substituted for bump boards. Always use a jenny to support the pole until it is high enough to use pikes. Only experienced workers must use the jenny. The angle of contact between the pole and jenny must be maintained as close to 90° as possible.

6-3.5.2.2 Number of Personnel.

At least three experienced workers must be used in addition to the authorized individual-in-charge. One person must handle the butt of the pole, and a minimum of two side pikers are needed. Inexperienced workers used in this work must be thoroughly instructed on the hazards involved. A two-legged jenny must be used. It is the responsibility of the authorized individual-in-charge to verify that all pole-lifting tools are in acceptable condition prior to the lift.

Figure 6-1 Pike Pole Method

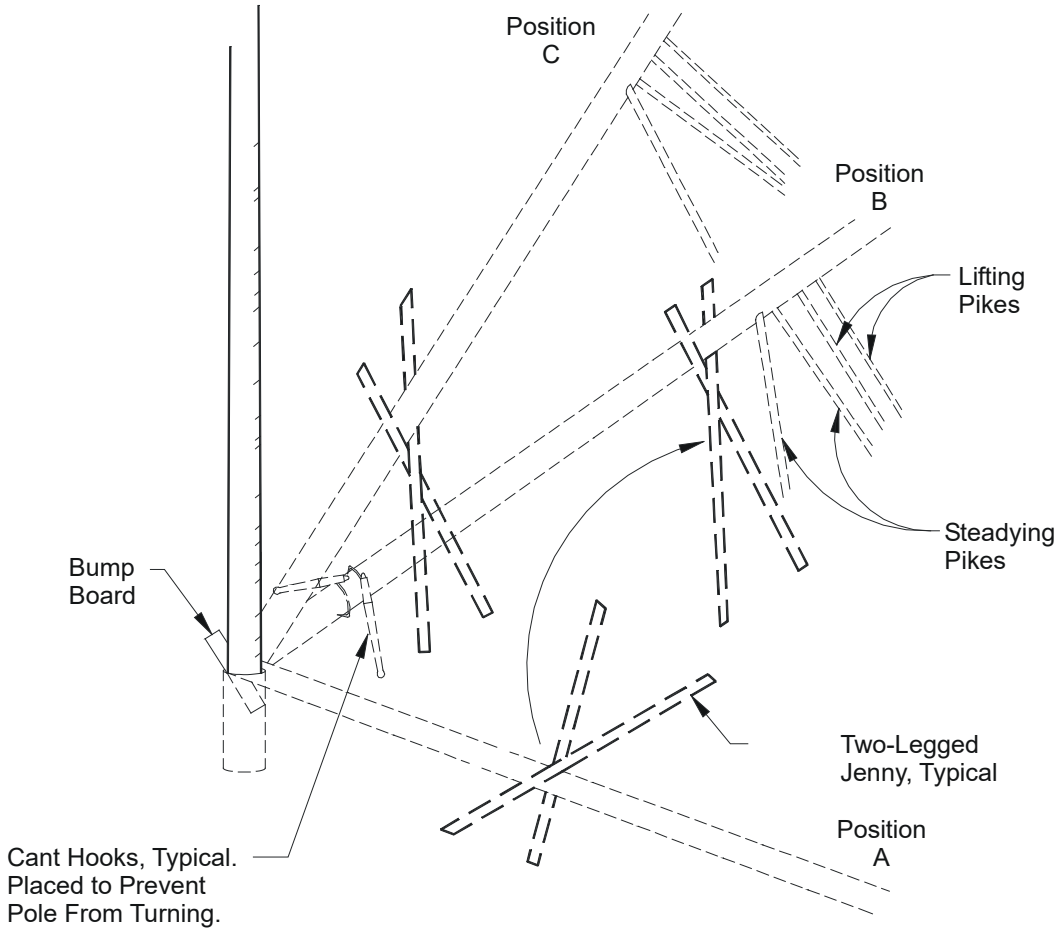

Position A:

Place jenny near top of pole at approximately right angles to pole. Footing of jenny should be at a point where it will not slip when the pole is lifted and supported by the jenny. Lift pole and jenny to Position B.

Position B:

Place two cant hooks, one to pull against, the other to prevent pole from turning. Place hooks about two feet above the probable ground line. Station a crew member to hold the hooks as the pole is being raised.

Position C:

As pole is being raised by pikers, jenny is moved down the pole until pole weight is supported by jenny (always keep fork of jenny in contact with pole). Repeat operation until pole slides into hole.

6-3.5.3 Winch Line Method.

Figure 6-2 illustrates the winch line method. When erecting poles by truck winch and winch line, ensure all workers are in the clear. Depending on the pole size and class, up to three experienced workers may be needed in addition to the authorized individual-in-charge. For a safe lift, the gins (or maneuverable rigging assembly) must have enough teeth to handle the pole. Do not use pikes in combination with a winch.

Figure 6-2 Winch Line Method

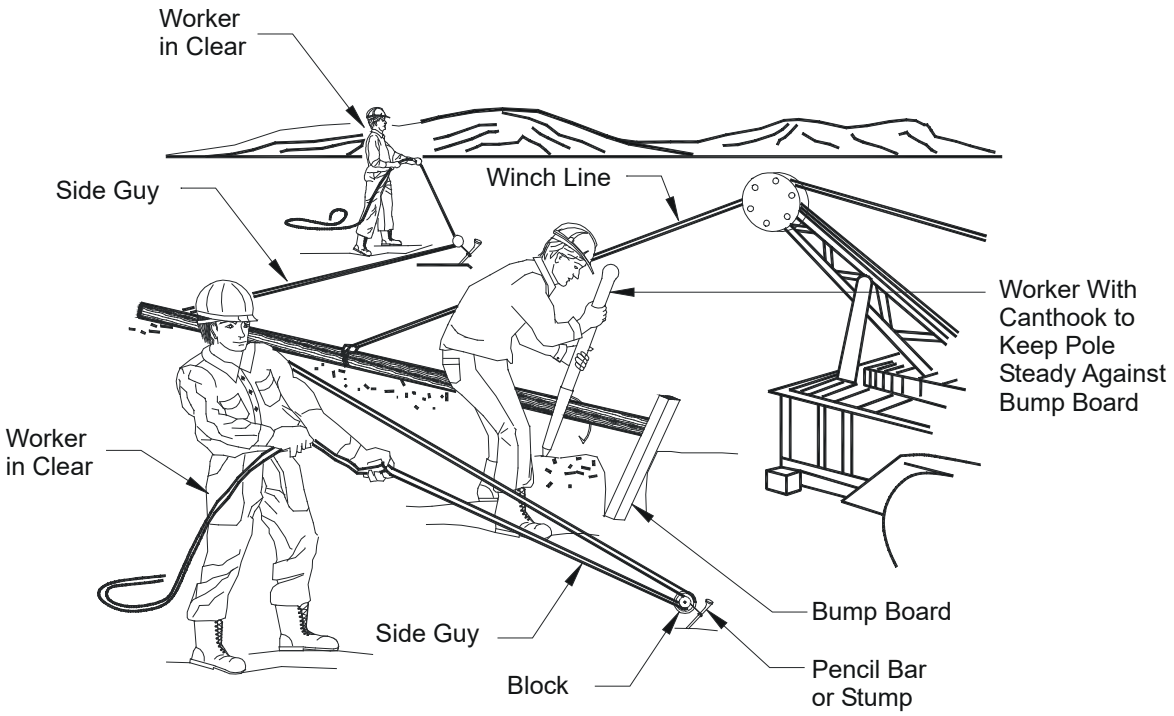

Attach side guys used in setting poles or structures to pencil bars driven into the ground. Never wrap tie lines or other guy lines around any worker's body.

6-3.5.4 Gin Pole Method.

In setting extra-heavy poles or those of 45 ft (13.5 m) or longer, it is best to use a tackle block attached to another pole rather than the pike pole method. The other pole is called the gin pole (or maneuverable rigging point), and is either existing or is especially installed for raising the new pole. The gin pole must be guyed sufficiently with not less than 5/8 in (16 mm) diameter rope to hold it erect under the strain of the load. When the new pole is raised using power from a vehicle, the temporary guy must be run from a snatch block at the bottom of the gin pole to a substantial anchor. This prevents the gin pole from slipping at the ground line. Otherwise, the gin pole must be set in a hole of depth 1 to 2 ft (305 to 610 mm).

6-3.6 Pole Setting Trucks.

Park pole setting trucks, where feasible, so that the boom will never be closer than 10 ft (3.0 m) to energized overhead conductors. When the work is being done near energized conductors and it is impossible to lower the boom sufficiently to be in the clear, place the conductors in an electrically safe work condition before starting work. When it is not possible to de-energize the conductors, and work must be done with the boom close to energized conductors, all personnel must keep away from the frame of the truck and must not touch the pole. Use pole guards or insulated blankets. Never touch with bare hands a pole that is being set in an energized line. Instead, an insulated cant hook or dry rope around the butt of the pole may be used to guide it into the hole.

6-3.7 Setting Poles in Energized Lines.

Only an electrical worker qualified as a Journeyman or Craftsman is permitted to guide poles through energized conductors. This operation is classified as “energized work” and appropriate permits and/or authorizations must be obtained. Employees must wear appropriately rated arc flash personal protective equipment as specified in UFM 3-560-01. UFM 3-560-01 does not allow Navy personnel to set poles in energized lines.

When a pole of any type is being set or removed between or near conductors energized at more than 600 V, the pole, winch cable, and truck frame must be effectively grounded with protective grounds. Lines must be covered with rubber protective equipment to prevent poles from touching energized parts, and workers must use rubber gloves. Attach a protective ground to the frame of all winches. If the pole is being erected by hand (pikes), the protective ground must be attached to the pole (using an approved grounding band) approximately 15 ft (4.5 m) from the butt end. Installing and use pole guards. In all cases, exercise extreme care to keep the pole from contacting conductors.

Note: Wood poles do not provide adequate insulation from energized lines.

6-3.8 Backfilling the Hole.

Backfill the hole after the pole placed. Use pikes to align the pole while backfilling. Do not remove pikes until sufficient tamping has been done to prevent the pole from falling.

6-3.9 Dismantling Poles.

Pole dismantling from a live line is a particularly hazardous operation. Exercise extraordinary care. Restrain each pole in at least three different directions by ropes before any work proceeds on the pole. This may be done by the following procedure:

- Make two turns around the pole with a sling and tie securely;

- Tie three lines around the sling at the proper angles;
- Insert pike poles under two sides of the sling well up the pole; and
- Snub off securely by pencil bars driven into solid ground or by any other substantial snub.

Always check the pole to see if additional support may be necessary because of pole conditions or strains. Include the following:

- Determine the condition of the pole butt before removing guys or wires, and support the pole with additional pike poles or temporary guys if necessary;
- When an old or reinforced pole is being dismantled, guy it sufficiently to withstand any altered strain on it. Include the weight of personnel who are to work on the pole while dismantling;
- When changing the strain on a pole, the authorized individual-in-charge must ensure it is sufficiently guyed to stand the altered strain and prevent the pole from falling. Do not climb a pole that is under an abnormal strain;
- A truck equipped with an “A” frame and backed up to the pole can be used to restrain the pole. The top of the “A” frame can be tied by the winch line to the pole. The pole at the ground line level can be securely tied off to the truck;
- In locations where poles cannot be lowered with a rope or derrick, attach a guideline so that the pole moves in the desired direction;
- All members of a crew who are not actively engaged in pole removal must stand well clear in case the pole must fall. Where appropriate, stop all pedestrians and traffic during pole removal; and
- When a pole is being removed, dismantle the pole before beginning the excavation around the butt.

6-4 CLIMBING AND WORKING ON POLES.

Workers must be familiar with the general rules for climbing poles and approaching the overhead work area, the differences of climbing wood poles as opposed to steel towers, and the dangers inherent in crossing overhead structures from one side to another.

6-4.1 General Rules.

- Do not work at the base of a structure or a pole while others are working above;
- Before climbing a pole the worker must first determine;
  - What circuits are energized and their voltage, and any unusual conditions which might pose a hazard.
  - The types and locations of circuits, and the direction of feeds.
  - The best climbing space to avoid all live wires, grounded wires, and signal circuits.
- Ensure there is an ample supply of rubber protective equipment on hand to completely protect the worker on the pole from all live wires, grounded wires, and signal circuits;
- Only one worker is permitted to ascend or descend a pole at any one time. Other workers must be in place on the pole or on the ground before the worker ascends or descends the pole;
- Extraordinary care is required of the workers when it becomes necessary for one worker to work above the other; and
- Before climbing poles, ladders, scaffolds, or other elevated structures; riding span wires, messengers or cables; or entering cable cars, boatswain chairs or similar equipment; each worker must first ensure the structure or device is strong enough to sustain the worker's weight.

6-4.2 Pole Inspection Before Climbing.

The type of pole being climbed affects the precautions that the worker must take in regards to climbing equipment and procedures. All types of poles must be safe to climb in terms of being strong enough to bear the weight of the climbers and their tools, and having adequate climbing space. Before allowing anyone to climb on a pole, the authorized individual-in-charge must ensure the pole is inspected, i.e. hammer tested and pike pole rocking test, and that it can be safely climbed based on the following:

6-4.2.1 Pole Condition.

Determine age, physical condition, and treatment of the pole. Do not climb a pole unless you are sure it can safely hold your weight. Before climbing, inspect the pole for the following:

- General condition – buckling at the ground line or an unusual angle may indicate pole has rotted or is broken;
- Cracks – horizontal cracks perpendicular to the grain of the pole may weaken pole. Vertical cracks can pose a hazard to the climber; keep gaffs away from them while climbing;
- Holes – hollow spots or woodpecker holes can reduce the strength of a wood pole;
- Rotting and decay – are cutout hazards and are possible indication of the age and internal condition of the pole;
- Knots – one large knot or several smaller ones at the same height may be evidence of a weak point on the pole;
- Depth of setting – evidence of the existence of a former ground line substantially above the existing ground line may be an indication the pole is no longer buried to a sufficient extent;
- Soil conditions – soft, wet or loose soil may not support any changes of stress on the pole; and
- Burn marks – burning from transformer failures or conductor faults could damage the pole.

6-4.2.2 Test Methods.

Inspect and test wood poles by the qualified employee prior to any climbing activities using one of the following methods:

- Hammer Test – rap the pole sharply with a hammer weighing about 3 lb (1.4 kg) hammer, starting near the ground line and continuing upwards circumferentially around the pole to a height of approximately 6 ft (2 m). The hammer will produce a clear sound and rebound sharply when striking sound wood. Decay pockets will be indicated by a dull sound or a less pronounced hammer rebound. Also, prod the pole as near the ground line as possible using a pole prod or a screwdriver with a blade at least 5 in (127 mm) long. If substantial decay is encountered, the pole is considered unsafe; and
- Rocking Test – apply a horizontal force to the pole and attempt to rock it back and forth in a direction perpendicular to the line. Caution must be exercised to avoid causing power lines to swing together. The force may be applied either by pushing with a pike pole or pulling with a rope. If the pole cracks during the test, it is considered unsafe.

6-4.2.3 Additional Checks.

Determine the following:

- If the configuration of conductors and equipment on the pole will provide adequate climbing space;
- If the removal of supporting conductors or guys may affect the safety of workers; and
- If the poles being climbed can be supported in such a way as to safely support workers on the poles. Pikes are not acceptable as a support method while personnel are working on poles.

6-5 POLE CLIMBING EQUIPMENT.

6-5.1 General Rules.

Observe the following:

- Make sure each worker who is authorized to climb has a full set of climbing equipment. Never loan or borrow a set of climbing equipment;
- Carefully inspect climbing equipment before each day's climbing activities. Examine leather for cuts, cracks, and enlarged buckle tongue holes. Examine metal parts for cracks, wear, or loose attachments. Examine climbers (gaffs) for proper cutting edges, length, and shape;
- The authorized individual-in-charge, or a designated worker, must inspect all tools, safety devices, and other equipment in use on a weekly basis. Any item that is not considered safe must be condemned, regardless of ownership, and must not be used;
- Ensure that employees understand that fabricated or purchased fall protection must meet or exceed the requirements outlined in ANSI Z359 and with ASTM F887. Body harnesses, meeting the requirements of ANSI Z359, with straps or lanyards, must be worn to protect personnel working at elevated locations on bucket trucks, power poles, towers, platforms, and other structures. Inspect body harnesses and straps before use each day to determine they are in safe working condition; and
- Use body harnesses instead of body belts for fall protection.

6-5.2 Wooden Pole Climbing Equipment.

6-5.2.1 Climbing Equipment.

Equipment sets each consist of a body belt (or body harness), a pole strap, and climbers (an assembly of gaffs, leg straps, and pads). Climbing equipment must meet the following requirements:

- Leg iron (shank) to be made of spring steel;
- Gaff (spur) to be forged from tool steel;
- Leg iron length must be in the range from 15 to 18 in (381 to 457 mm) from the instep to end of the shank;
- Leather straps must be at least 1-1/4 in (32 mm) wide and 22 in (559 mm) long; and
- Pads must adequately protect the calves.

Repair before use any climbers, pole straps, and other leather items that have any of the following defects:

- Cracked, dry, or rotten leather;
- Leather that is worn thin;
- Cuts or worn places which are of sufficient depth to weaken the leather;
- Broken stitches or loose rivets at buckles, D-rings, or snaps;
- Snaps which have weak springs behind the tongue or loose rivets which hold the tongue;
- Loose tongues in buckles; and
- Buckles, D-rings, or snaps that show considerable wear or which have been cracked or bent.

6-5.2.2 Leather Care.

Provide care for leather equipment as follows:

- Leather equipment in regular use must be cleaned and dressed at least every three months, and more frequently when the equipment is wet from

rain or perspiration, or is soiled with dirt or mud. Leather equipment not in regular use must be cleaned and dressed at least every six months;

- Wipe off all surface dirt and mud with a sponge dampened (not wet) with water. Never use gasoline or other cleaning fluids, as they tend to dry out and harden the leather;

- Wash leather with a clean sponge in clear lukewarm water and a neutral soap (free from alkali), preferably Saddle soap. Thoroughly wash the entire length of the leather and work the lather well into all parts. Place in a cool area to dry;

- Dress leather with oil after each cleaning. Use a small quantity (about 20 milliliters (4 teaspoons)) of pure neatsfoot oil per set of equipment and apply it gradually with the hands, using long light strokes while the leather is still damp from washing. Leave in a cool place to dry for about 24 hours, and then rub the leather vigorously with a soft cloth to remove all excess oil; and

- When safety harnesses/belts and straps are not in use, store them in designated compartments on the service truck or other suitable location to protect them from damage. When stored, wrap climbers in pairs and fasten with their straps.

6-5.2.3 Climbing Equipment Inspections.

Keep climbers, straps, and pads in good conditions at all times. Inspect climbers before each use to detect nicked or dulled cutting edges on the gaff. Check them as soon as possible after striking them against hard objects such as pole hardware or nails. The worker must inspect climbers in regular use at least weekly. If any of the following conditions are found, repair or replace the climbers before using:

- Loose gaff;

- Nicks and depressions in the gaff;

- Ridge of gaff not in alignment;

- Dull gaffs;

- Broken or distorted gaff points;

- Broken, loose leg or foot strap loop;

- Excessively worn, cracked, or torn straps and pads;

- Enlarged buckle holes in the straps;
- Broken or damaged strap buckles;
- Fractured or cracked leg irons and stirrups;
- Excessively worn stirrups;
- Fractured leg iron sleeves;
- Broken or loose rivets or screws on sleeves and straps;
- Defective strap rings;
- Broken or damaged loop clip-on straps;
- Gaff guards not in good condition; or
- Improper length of gaffs.

6-5.2.4 Gaff Requirements.

Gaffs must be at least 1-1/4 in (32 mm) long, measured from the point of the gaff to the point of contact with the stirrup on the underside. Sharpen climbers using a gaff-shaping bit as follows:

- Place the climber between wood in a vise with the leg iron horizontal and the gaff on the topside;
- Use a smooth cut file and finish with a sharpening stone. Never grind with an emery wheel as this takes the temper out of the metal;
- The outer ridge of the gaff must never be filed. To obtain the proper width, a file may be used on the rounded portion. Apply strokes that follow the contour of the gaff;
- To sharpen the gaff to proper thickness, file the metal from the flat inner side of the gaff. Care must be taken to prevent notching the leg irons or stirrup. Use forward motions toward the point and down to edges of the underside of the gaff. Do not allow rocking motions of the file because this can round the edges of the gaff. After the proper thickness has been reached, the underside of the gaff must be straight to within 1/16 in (1.6 mm) of the point, then rounded slightly toward the ridge of the gaff on a radius of 1/4 in (6.4 mm). Additional sharpness may be obtained following filing by dressing the underside and rounded portion of the tip with the

honing stone. Burrs along the edges must also be removed with the stone; and,

- Never use a climber with a gaff shorter than 1-1/4 in (32 mm), as measured on the flat side.

Restore damaged or dull gaffs to original shape by filing and honing (see Figure 6-3). If gaffs cannot be restored, replace them.

Figure 6-3 Honing a Gaff

Hone Lengthwise - Not Crosswise

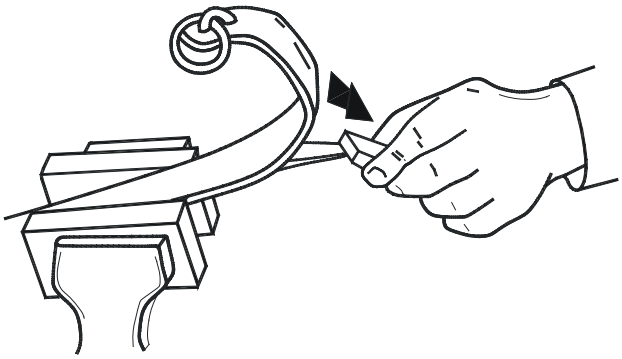

6-5.2.5 Properly Sharpened Gaffs.

Three methods are normally used to determine if gaffs are properly sharpened.

6-5.2.5.1 Gaging Method.

The gaging method is used to determine the length, width, and thickness of the gaff and profile of the point. Reference lines are scored on the gage with slots provided to determine if the gaff length is satisfactory. Most gages also provide a contour test to determine if the point is properly curved. Openings are provided for determining if the point is too keen. Each manufacturer makes a gaff gage to use with its own climbers. Thus, gaff gages are not usually interchangeable. Use manufacturer's instructions if available. The "thickness" slot in the gage is used to measure the thickness of the gaff at 1/2 in (12.7 mm) from the point. These measurements are made with the outer ridge of the gaff resting flat against the part of the gage containing the scored lines. If the point of the gaff extends beyond the farthest line, the gaff is too thin. If it does not reach the nearest line, then it is too thick. The "width" slot on the gage is used to measure the width 1/2 to 1 in (12.7 to 25.4 mm) from the point. The same methods and reference line are used in measuring for thickness. A minimum length reference line is provided, intersecting the thickness measurements, to determine if the gaff meets minimum lengths.

6-5.2.5.2 Plane Test Method.

The plane test method may be used with the gage, or independently if the gaffs are sharpened by machine process. The test is made by using a soft board to determine if proper sharpness has been reached. Place the climber with the gaff side down and parallel to the board without applying downward pressure above the gaff. Push the climber along the board. If the gaff is properly contoured and sharpened, it can dig into the wood and hold within approximately 1 in (25.4 mm). If the climber continues to glide along the board for more than 1 in (25.4 mm), additional honing is required. After the "plane test" has been made, it can be supplemented by applying a cutout test. Jab the gaff into the board at about a 30-degree angle for approximately 1/4 in (6 mm). Bring the leg iron down against the wood while applying forward pressure--one hand holds the leg iron and the other holds the stirrup. If the gaff cuts out within 3 in (76 mm), it is improperly sharpened.

6-5.2.5.3 Pole Cutout Method.

The pole cutout method is used after climbers have been machine sharpened or gauged (and as often as required thereafter). Perform a pole cutout test in accordance with Table 6-2 before climbing. Check failed gaffs with a gaff gauge to determine the reason for failure and correct the deficiency.

Table 6-2 In-Use Check of Pole Climber Gaffs

Check
Initial placement. Place the climber on the leg, holding the sleeve with the hand, palm facing the pole. With the leg at about a 30 degree angle to the pole and the foot about 12 in (305 mm) off the ground, lightly jab the gaff into the pole to a distance of approximately 1/4 in (6 mm).
Intermediate action. Keeping enough pressure on the stirrup to keep the gaff in the pole but not so much as to cause the gaff to penetrate any deeper, push the climber and the hand toward the pole by moving the knee until the strap loop of the sleeve is against the pole.
Full pressure. Making certain that the strap loop is held against the pole with pressure from the leg, gradually exert full pressure of the foot straight down on the stirrup without raising the other foot off the ground (to maintain balance if the gaff does not hold).

6-5.2.6 Gaff Protection.

To protect the gaffs, use gaff guards when climbers are not being used. Gaff guards must also be used when other tools and materials are stored or transported along with the climbers.

Note: Never store or transport climbers without appropriate gaff guards.

Do not wear climbers when:

- Working on the ground;
- Traveling to and from a job;
- Piking poles;
- Walking through underbrush or rough terrain; or
- Riding in motor vehicles.

6-5.3 Concrete and Steel Pole Climbing.

OSHA standards (29 CFR 1910 and 1926) require fall protection for certain working heights. Acceptable fall protection includes the use of standard railings and toe boards, floor opening covers, or a personal fall arrest system. A body belt is no longer acceptable as part of a personal fall arrest system.

Fall protection is required for operations and maintenance activities when personnel are required to work at a height of 4 ft (1.2 m) or more above ground or to the next lower level. For construction activities, workers must be protected from falls when working at a height of 6 ft (1.8 m) or more. An approved positioning device that limits a fall to less than 2 ft (0.6 m) must be used when a worker needs to be supported on an elevated vertical surface such as a wall or utility pole, and working with both hands free while leaning. Observe the following requirements:

- A proper anchor point must be identified and evaluated by qualified personnel before an appropriate system can be selected. OSHA regulations accept pad eyes, bolt holes, and other sturdy structures capable of supporting 5,000 lb (2,200 kg) per attached worker;
- Positive systems have an anchor point independent of the support method, a harness to hold the worker, and a connecting device between the anchor point and the harness;
- Harnesses must only be used for the personal protective purpose for which they are designed. In addition to fall-arrest harnesses, there are fall-arrest/positioning, fall-arrest/suspension, fall-arrest/retrieval, and retrieval/positioning harnesses;
- Manufacturer’s instructions in regard to height and weight must be followed for sizing of the harnesses and their connecting devices, and for inspection and maintenance of the complete systems. All equipment must be taken out of service and inspected for damage after being subjected to a fall impact; and

- Workers authorized to climb must have a complete set of approved tools. The number of tools carried in tool belts must be kept to a minimum. Tools must not be carried in safety harnesses.

6-6 POLE CLIMBING AND WORK PRECAUTIONS.

Only after a determination of the pole's safety, the collection of necessary climbing equipment and work tools, and obtaining assurance that the line is placed in an electrically safe work condition, and the planned energized work is authorized, can the worker start climbing. Protect hands and arms by wearing gloves and long sleeve shirts. Refer to Section 6-4 for pole inspection requirements before climbing.

6-6.1 General Pole Climbing Precautions.

Observe the following precautions:

- Arrange tools and equipment to allow both hands to be free for climbing;
- Do not stand on mailboxes, signs, fire alarm boxes, or similar equipment that may be attached to the pole or located near it;
- Do not race up and coast down poles;
- Do not use safety straps while climbing, except when climbing over slippery or ice-coated cross arms or timbers. Whenever the hands are apt to slip off, a safety strap must be used. The use of rope safeties is prohibited;
- Remove all signs from a pole before any worker climbs or does any work above them on a pole. It is not desirable to have signs on poles, but some signs, such as street signs, may be necessary. If street signs are removed, they must be replaced as soon as possible after work is completed;
- Climb on the high side of a raked or leaning pole, if possible, but do not climb on the side where the ground wire is attached. Avoid grasping pins, brackets, cross arms, braces, or other attachments that might pull lose and cause a fall;
- Never slide down any type of pole or any guy wire. If it is impossible to use climbers for ascending and descending such places, ladders or other means must be used;
- Do not ride overhead guys or cables. (This is not intended to apply to cables installed for river crossings or otherwise designed to support workers in suitable conveyances);

- If more than one worker needs to work on the pole at the same time, the first worker must reach working position before the next worker leaves the ground. Ordinarily, no worker must work directly under another worker on the same pole. When this is necessary, take extreme care to prevent tools or other objects from being dropped on the worker below;

- Minimize the number of tools carried in tool belts. Keep all other tools on the ground until they are required. Needed tools must be raised and lowered by means of a canvas bucket attached to a hand line;

- When carrying a hand line up a pole, leave the hand line uncoiled with one end attached to the rear of the body belt or harness. When climbing with a hand line, take care to prevent the hand line from fouling on any pole attachments;

- Wear appropriately rated arc flash personal protective equipment as specified in UFM 3-560-01; and

- Discontinue work during adverse weather conditions such as thunderstorms, rain, high winds, and icy conditions. In bad weather, do not climb poles except for emergency restoration work.

6-6.2 Wooden Pole Climbing Precautions.

Observe the following precautions:

- Seat gaffs securely. Be especially vigilant when the pole is ice or sleet covered;

- Use pole steps whenever they are available, but only after checking that they can be used safely;

- Use climbers carefully on the pole to avoid injury to another worker on the pole; and

- Be careful to avoid weather cracks, checks, knots, shakes, rots, and hard places, which might cause gaffs to cut out. Remove any tack or nails which may impede safe climbing.

6-6.3 Concrete and Steel Pole and Tower Climbing Precautions.

Observe the following precautions:

- Always make sure that gloves and shoe soles are in good condition and free from grease or other lubricants. Many falls are caused by slick work

gloves or slick shoes. Rough cord sole shoe or boots are recommended. Be particularly careful in wet or icy weather conditions; and

- Carefully wear and regularly inspect the safety harness since steel and concrete surfaces can easily damage or cut the harness.

6-6.4 Working on Poles.

Never change the amount of strain on a pole by adding or removing wires until you are sure that the pole can stand the altered strain. If in doubt, consult the authorized individual in charge.

6-6.5 Safety Straps.

Wear safety straps at all times when handling wires or apparatus while on a pole or structure. Take the following precautions:

- Be careful in attaching snaps to D-rings. Visually ensure that the snap keeper is fully closed in the correct ring before any weight is applied to the safety strap;

- Always be sure that safety straps are connected and not twisted while in use;

- Never depend on a cross arm or cross arm pins and braces for support;

- Never attach safety straps above the cross arm in the top gain or around insulator pins, cross arm braces, transformer hangers, pole steps, or guy wires. If there is no cross arm in the top gain, the strap must not be placed closer than 2 ft (0.6 m) to the top of the pole. In this case take precautions to assure that the strap does not slip off. Ideally the strap must be below the top pole attachment, except where that attachment is above eye level;

- Never fasten both safety harness snaps in the same D-ring in order to reach out farther on the pole. An extension safety strap must be used or the safety harness let out so that work can be performed with the safety harness snaps fastened one in each D-ring; and

- Do not attach metal hooks or other metal devices to body harnesses. Metal chains and keepers must not be used. Instead, use leather straps or rawhide thongs with hard wood or fiber keepers. Care must be taken to prevent the snaps on the safety harnesses/belts from coming in contact with anything that may open a snap. The tongue of the snap on the safety harness/belt must face away from the body.

6-6.6 Hoisting or Lowering Materials.

Take the following precautions when hoisting or lowering materials:

- Drop material that cannot be lowered safely only if there is no danger to workers or the public;
- Position workers engaged in hoisting tools and materials so that they cannot be injured by a falling item; and
- Do not leave materials and tools overhead in an insecure position. Large objects must be securely lashed.

6-7 CROSSING STRUCTURES.

To get from one side of a double-pole supported structure to the other, the worker must descend to the ground and go up the other pole unless there are adequate handholds and adequate clearances from live parts to allow safe crossing along the structure. Observe the following precautions:

- When it is necessary to climb half-way across a cross arm to inspect middle phase insulators, the worker may climb the rest of the way across, provided that a safety harness/belt can be kept strapped around a timber as a safeguard;
- Never cross through an open-air switch unless both sides are placed in an electrically safe work condition;
- Do not use air switch arcing horns for support in walking timbers since these horns break easily and a fall could result; and
- Never walk along an H-frame cross-arm with the line energized.

6-8 STRINGING OR REMOVING DE-ENERGIZED CONDUCTORS AND OVERHEAD GROUND WIRES.

6-8.1 Pre-Work Meeting.

Discuss the plan of operation, type of equipment being used, adjacent energized lines, necessary grounding devices and procedures, crossover methods, and Safe Clearance requirements before stringing or removing de-energized conductors or overhead ground wires.

6-8.2 Work Adjacent to Energized Lines.

Note: For the Navy and Air Force, work adjacent to energized lines is not authorized.

Observe the following precautions during all work activities:

- The worker attending the payout reel must wear rubber gloves when pulling wire over or near energized conductors, and be positioned on an insulated stand of a size equivalent to or larger than a standard rubber blanket;

- Ground the payout reel. The authorized individual-in-charge must approve any deviation in grounding the payout reels;

- A bull line, which must be of dry polypropylene rope ≥1/2 in (12.7 mm) diameter, must be placed in position to pull the wire before attempting to string it. The bull line must be of sufficient length to reach the distance the wire is being pulled. Fasten the wire to the end of the bull line and pull it into position;

- A vehicle used to pull the wire must be positioned so that the driver can see the signals of the reel operator. Both in pulling in and in sagging the wire, the pulling must be slow and steady to prevent swinging the wires into the energized conductors. The wire must be watched carefully to prevent its hanging up on tree limbs, weeds, and other obstructions;

- Do not touch any conductors or wires on the ground without rubber gloves;

- Wear rubber gloves and use other protective devices, as appropriate, when wires are strung and sagged over, under, or across conductors carrying a voltage of 5,000 V or less. Positively and constantly ground conductors carrying more than 5,000 V during the stringing operation. Ground the wire with standard grounding devices as soon as it is ready to dead-end;

- Discontinue operations and seek appropriate shelter when notified that a lightning warning is in effect. Electrical charges can appear on the line from a lightning strike or from induced static charges from a very dry atmosphere. Be in contact with the Base Weather Service and cease outside activities when notified of a lightning warning. Waiting for an indication of lightning can expose a work crew to adverse weather conditions; and

- Keep wires being strung along or across streets or highways higher than any expected car or truck traffic. Block traffic when this line elevation is not possible.

6-8.3 Grounding.

Refer to UFM 3-560-01 and IEEE Std 1048 for requirements for grounding of de-energized lines. Other grounding requirements are as follows:

- Permanent ground wires are installed to protect workers. All permanent grounds must be installed in accordance with the requirements of NFPA 70 or IEEE C2, as applicable. If the permanent grounds are not installed, the metallic case, covering, or mounting support of any energized piece of electrical equipment must be treated as if it is energized at full voltage;

- Install ground wires clear of all metallic line equipment (except that which is normally grounded), hardware, and street lighting fixtures; and

- Install ground wires on distribution wood poles with protective molding for the entire working length of the pole to protect them from damage. The entire working length of the pole is the distance from the point where ground wire terminates near the top of the pole to 5 ft (1.5 m) below the lowest cross arm or bracket, and from the ground line to 8 ft (2.5 m) above the ground line.

Never cut an overhead ground wire or neutral wires without the specific approval of the authorized individual-in-charge. Always avoid opening a joint in such a wire without first bridging the joint with wire of equal or larger size.

6-8.4 Handling and Stringing.

IEEE Std 524 provides general recommendations on the methods, equipment, and tools used for the stringing of overhead line conductors and ground wires. Safety precautions include:

- Use adequate braking to stop all payout reels. Do not touch or attempt to hand stop a revolving reel;

- Securely fasten the inside end of the coil wire to the reel to prevent the wire from getting loose when the wire has been extended out. If the inside end of the coil cannot be secured, a tail rope must be fastened securely to the wire before the end is reached to prevent its getting loose;

- Bond and ground all stringing equipment, such as reel stands, trailers, pullers, or tensioners;

- String the lines to clear the ground by an amount not less than that specified in IEEE C2. These minimums depend upon whether the line is above a street (consider its traffic classification), above a pedestrian way, or over or near other structures. Wire and guys that are being strung must

be kept clear of any possible interference with public traffic of any type. Where it is necessary to block traffic temporarily while wires and guys are being installed, one or more members of the crew must be assigned to direct traffic; and

- Stringing by Activity personnel must normally be done by the tension method, since this keeps the conductor clear of energized conductors and clear of obstacles that might cause surface damage to the wire. Slack stringing may be appropriate for new short line extensions. Sag the lines to meet the requirements of IEEE C2:

  - Take care not to put kinks into any part of the line when stringing wires. Kinks reduce the strength of the wire and may result in fallen wires later.

  - Before changing the strains on a pole by adding wires, an engineering evaluation must be completed to ensure that the pole can safely stand the new strain.

6-8.5 Clipping-In or Tying Wires.

This involves the transferring of sagged conductors from their stringing travelers to their permanent insulator positions where they may either be clamped or tied to insulators. Safety precautions include:

- Securely tie wires at each tie-in-type insulator to prevent the wires becoming loose and falling to the ground. Where double arms are provided, line wires must be well tied-in to insulators on each arm. This applies to both pin- and post-type tie-top insulator work. Clamp-type insulators must have the clamps tightened as specified by the manufacturer;

- Test the phase wires with a potential transformer or other means, to make sure that the phase wires of one circuit are being connected to the corresponding phase wires of the other circuit when it is necessary to connect circuits at any point on the line; and

- Be sure that the phase wires are not crossed when turning the vertical angle on three-phase lines; that is, phase wires must take the same position leaving an angle as coming into it.

6-8.6 Secondary Line Installation.

Install secondary lines to meet line clearance requirements of IEEE C2. Lines can be single or triplex wires. Workers must be particularly careful in stringing secondary services to avoid the hazards of working in close proximity to primary lines. De-

energize and ground nearby or adjacent energized lines before stringing secondary wires. Take care not to injure the weatherproof covering when handling and stringing of weatherproof-covered wires.

6-8.7 Removing Lines.

Use the same general precautions as stringing wires when removing or salvaging wires. Where practical, the removed wire must be completely pulled out and laid flat on the ground before any attempt is made to coil the wire by hand or on a non-power-driven reel. Never change the strains on a pole by removing wires until certain that the pole can safely stand the altered strain. Where a pole will be weakened by the removal of the wires, it must be guyed before these wires are removed. All wires must be lowered with a hand line. Use care before cutting a wire aloft to avoid contact with other wires.

Do not allow lines which are being cut or rearranged to sag on, or be blown against other electric power lines, signal lines, signal equipment, metal sheaths of cables, metal pipes, ground wires, metal fixtures on poles, guy wires, or span wires. Do not allow wires which have been cut, or which are being arranged, to fall near or on a roadway where they might endanger traffic. Notify all persons working on lower levels of poles and all personnel on the ground well in advance of the cutting so that they may stand clear.

6-8.8 Guying.

Do not install or remove guys without engineering guidance.

6-8.8.1 Installation.

Install guys to meet the following requirements:

- When insulators are used they must be connected into the guy wire line before the guy wire is set in place. In new work, guys must generally be installed before line wires are strung. In reconstruction work, guys must be installed before any changes are made in the line wires and care must be taken not to place excessive pull on the pole and wires already in position;

- Install guys so that there is minimal interference with the climbing space, and to clear all energized wires;

- Provide guy strain insulators to obtain necessary insulation when required by building or safety codes;

- Install guys to the correct tension. Where necessary, a guy hook may be used to prevent the guy from slipping down the pole. Locate these hooks so they do not interfere with climbing, and place them so they are not

convenient for use as a step. Where guys are liable to cut into the surface of a pole, the pole must be protected by a guy plate at the point where the guy is attached. The plate must be well secured to the pole to prevent the possibility of injury to a worker climbing up or down the pole;

- Install guys so that they do not interfere with street or highway traffic. Equip guys located near streets, or highways, with traffic guards. Traffic guards are sometimes called “anchor shields”. Guy guards (traffic shields or anchor shields) must be yellow;

- Install guy wires so that they do not rub against messenger or signal cables; and

- Do not use guy wire containing snarls or kinks for line work. Use guy wires of the correct length to avoid splices.

6-8.8.2 Removal of Guys.

Determine the condition of the pole before removing guys. Brace the pole securely if it is weak before any changes in pole strains are made. Brace the pole temporarily if the removal of guys from a pole can change the strain and present a dangerous condition.

Where it is not possible to install side guys, poles may need bracing to be self-supporting. Install pole bracing so that it does not interfere with climbing or with street or highway traffic. Pole braced guys must not be used on poles which must be climbed.

6-8.9 Insulators.

Pick up insulators by their tops to avoid cutting gloves or hands on the insulator petticoats. Do not screw down insulators too tightly because their tops might break off, cutting gloves or hands.

6-9 ENERGIZED WORK.

Energized work requirements are provided in UFM 3-560-01.

6-10 WORKING ON OR NEAR POLE-MOUNTED EQUIPMENT.

This paragraph provides precautions applicable to equipment that is mounted above grade. Be aware that some local and state safety regulations do not permit grounding of enclosure cases on wood poles when there is a possibility that an accidental contact with bare aerial lines could occur. The equipment on the Activity might have been installed in accordance with these regulations. Transformers connected to an energized circuit must be considered as being energized at the full primary voltage unless positive verification is made that they are adequately grounded.

6-10.1 Surge Arresters.

Check that the permanent ground connection is intact before any work is done. Do not climb on or strap off to surge arresters.

6-10.2 Switches and Fuses.

The maintenance of switches and fuses might require temporary line modifications to permit repairs while maintaining service continuity. Engineering guidance must likely be required in preparing a step-by-step modification procedure. Both sides of fuses must be placed in an electrically safe work condition in order for repair work to proceed.

6-10.3 Capacitors.

Individual capacitor banks must be grounded if insulated capacitor mounting racks are not used. Provide grounding in accordance with the manufacturer's instructions.

6-10.4 Power Transformers and Voltage Regulators.

Work on energized pole-mounted transformers is prohibited except for testing, replacement of fuses, and switching. Observe the following precautions during installation:

- Carefully inspect all frames and tackles used in erecting pole-type transformers before each use. Repair defects before the frames and tackles are used;

- Wherever possible, junction poles, subsidiary poles, and street lighting poles must not be used as transformer poles. When it is necessary to install transformers on junction, subsidiary, or street lighting poles, be careful to maintain proper climbing space and to avoid crowding of wires and equipment;

- Install transformers only on poles strong enough to carry their weight. Transformer poles must be straight and, where necessary, guyed to prevent leaning or raking of the pole after the transformer is hung;

- All crew members must stand clear and detour traffic when transformers are raised or lowered. In congested traffic locations, the pole space must be roped off. Personnel on the pole must place themselves on the opposite side from that on which the transformer is being raised or lowered. Pole steps and other obstructions in the path of ascent/descent of large transformers must be removed;

- When transformers are installed, the pole climbing space must be protected so that climbing workers do not come too close to transformer cases;
- Do not install pole-type transformers until they are filled with a sufficient amount of the appropriate oil or fluid;
- Determine phase rotation before the old bank is removed, and before the new three-phase bank of pole-type transformers is installed, check voltage and phase rotation as well as the nomenclature plate;
- Only qualified climbers must be allowed to climb poles to inspect and test pole-type transformers. Never stand on or otherwise contact transformer cases;
- Disconnect all energized connections to transformers and provide a Safe Clearance from all live circuits before changing or replenishing transformer oil; and
- Do not use lighted matches or open flames of any kind when opening transformers.

6-10.5 Fuses.

When installing fuses, workers must be careful to avoid contact with any live lines and with other metal surfaces even if they are supposed to be grounded (i.e., grounded lines, the casings of grounded transformers, street lighting fixtures, signal lines, signal equipment, the metal sheathing of cables, metal conduits, span wires, or guy wires).

Before installing fuses in new cutouts, replacing fuses, or opening disconnects, workers must wear and use the appropriate personal protective equipment in accordance with UFM 3-560-01.

6-10.6 Service Wires.

Use at least two qualified workers when installing services from a transformer pole when primary conductors energized at 4,000 V or more are within contact distance of the secondary wires.

Service wires must not be installed on transformer poles, unless minimum separation requirements can be maintained between the service wires and the energized primary conductors or apparatus. The neutral wire must be connected first when making connections to secondary buses followed by the phase conductors. Reverse the procedure when disconnecting services.

6-10.7 Testing.

Qualified personnel must perform testing of transformers, autotransformers, and similar equipment. All temporary leads used in testing, such as secondary leads of potential transformers, thermometer leads, and recording voltmeter leads, must be securely supported on the pole and must clear all vehicular traffic. The positions of these leads must not interfere with the climbing space or with other maintenance work which may be required while the testing is in progress.

6-11 AERIAL ROPE.

6-11.1 Conductivity.

Properly maintained polypropylene synthetic rope (not natural-fiber rope) which meets IEEE Std 516 requirements must be used for aerial lines, hand lines, and tag lines for energized work. Keep rope stored in a clean, dry location and protected from damage and contamination. Rope lines used must be constructed without wire reinforcement, and be at least 1/2 in (12.7 mm) in diameter.

6-11.2 Terminology of Rope Use.

The following terms are used:

- Hand lines are used to raise and lower light materials and tools. They may be used for holding small transformers away from the pole during raising or lowering;
- Throw lines are used to pull a larger rope into place for performing a task beyond the capacity of a hand line. They are small diameter ropes designed to be thrown over support objects such as cross arms or tree limbs;
- Bull ropes are used when a hand line is not strong enough to raise heavier equipment. They are used also for fastening temporary poles, for holding out heavier transformers, and for lowering trunks or heavy limbs in tree trimming operations;
- Running lines are used for pulling several span lengths of wire at one time;
- A sling is a looped rope assembly useful for many purposes, such as, hoisting heavy equipment, lashing tools or materials in place; attaching a block or a snatch block to a pole; making temporary installations such as lashing an old pole to a new pole; or for tying up line wires;
- A safety line is used only for lowering a worker to the ground; and

- A snatch block is a rope sheave and hook with one side of the sheave open to avoid threading the rope through a hole.

6-11.3 Knots and Splices.

Where it is necessary to connect two aerial rope lines permanently, a splice must be made. No metal, wire, or clamps can be used in making the splices. The strength of a splice can be close to the original strength of the rope, and is always much greater than the strength of a knot.

Knots, friction tape, cord, or marlin must not be used in joining the two parts of an aerial rope line. Properly assembled splices are not normally bulky. Each end of the rope line must be finished (served) to prevent unraveling of the strands. A hand line must be dry and strong enough for use as a safety line for lowering a person safely from a pole.

6-11.4 Hand Line and Rope Line Precautions.

Although the term hand line is used in the following paragraphs, these precautions apply to all rope lines:

- Hand lines must be at least twice as long as the height of the highest cross arm, and equipped with single sheaves. No metal must be used on any hand line, except for the use of a standard hook;

- Hand lines with worn or frayed parts must be scrapped immediately;

- Hand lines must be carried up a pole uncoiled and attached to the back of body harness/belt before any work is done. A worker climbing with a hand line must take care to prevent the hand line from catching on pole attachments;

- Hand lines must not be pulled over sharp bends, sharp edges, or surfaces with splinters;

- Hand lines must be kept free from solder, oil, grease, snarls, and knots;

- Hand lines must not be stored while they are wet;

- When not in use, hand lines must be rolled up and stored in a dry and protected place. Always thoroughly dry hand lines before storing. Hand lines must never be permitted to lie on the street or highway;

- Where hand lines are being let out on the poles, at least one member of the crew must be stationed at a safe distance from the base of the pole to take care of the loading and unloading of the hand line, and to see that the ends are kept free from all street traffic; and

- One hand line must be kept in reserve and maintained in a dry condition to use as a safety line in case there is a need to rescue a worker from a pole. This hand line must be stored in a protected part of the truck where it cannot become wet.

6-11.5 Tackle Blocks.

Tackle blocks used on maintenance work must be equipped with safety snaps to prevent wire grips and live tools from coming loose and falling.

6-12 TOOLS.

Aerial line work involves the use of portable power tools and other miscellaneous tools.

6-12.1 Portable Power Tool Precautions.

Use only approved portable power tools on poles, towers, or structures:

- Keep electric tools and connected power cords a safe distance from any circuit or apparatus energized in excess of 600 V, phase to phase. Power cords must be adequately insulated and properly secured to prevent accidental contact with any conductor;

- Do not use air-driven and hydraulic-driven tools when their conducting parts can come closer than the restricted approach boundary to any energized conductor or apparatus. Cover the energized conductors or apparatus with protective equipment appropriate for the voltage involved when the minimum clearances cannot be obtained. Supply hoses must be made of non-current carrying material throughout, be properly maintained, and secured in use to prevent accidental contact with any energized conductor or apparatus;

- Use power saws in an elevated position on a pole, tower, or structure only when approved by the authorized individual-in-charge; and

- Non-current carrying metal parts of hand-held portable electric power tools must be grounded unless supplied from a ground-fault interrupting (GFI) circuit. Approved double-insulated tools and tools fed from ungrounded isolated power supplies need not be grounded.

6-12.2 Miscellaneous Tool Precautions.

- Pike pole handles must be sound and free from splinters. Spear points (gaffs) must be sharp and securely fastened to a pole. When carried on trucks, pike poles must be placed to prevent injuries;

- Maintain cant hooks and carrying hooks in a safe condition;
- Never use Jennies with cracked or broken legs, dull teeth, or loose bolts. Use only approved Jennies;
- Never use pole jacks with defective releases, or jacks that might slip when loaded;
- Only use approved bumper boards. A bumper board must be either 2 by 6 in (50 by 150 mm) board of length 6 to 8 ft (1.8 to 2.4 m), or 1-1/2 by 6 in (38 by 150 mm) channel iron of length at least 6 ft (1.8 m);
- Never use wire reels with defects evident. All wire reels must have suitable brakes;
- Close folding-type knives before placing them in toolboxes or other storage containers. Open knives must be kept in scabbards when not in use;
- Maintain personal tools in good condition; and
- Keep live-line tools clean, dry and in good condition.

6-13 AERIAL LIFTS AND INSULATED BUCKETS.

Aerial lifts must be constructed, maintained, and tested to meet the following standards:

- ANSI/SIA A92.2
- ANSI/SIA A92.3
- ANSI/SIA A92.5
- ANSI/SIA A92.6

The following provides requirements regarding their use.

6-13.1 Types of Aerial Lifts.

Aerial lifts include the following types of vehicle-mounted aerial devices used to elevate personnel to job-sites aboveground:

- Extendable boom aerial device.

6-13.2 Aerial Ladder.

- Articulating boom aerial device;

- Vertical tower; or
- A combination of any of the above.

The vehicle may be a truck, trailer, or all-terrain vehicle.

6-13.3 Insulating Versus Non-Insulating.

The aerial device manufacturer must state in the manual and on the instruction plate whether the aerial device is insulating or non-insulating. Insulating device categories are provided in Table 6-3.

Note: Insulating aerial devices do not protect personnel from phase to phase or phase to ground contacts at the platform end. When working from an insulated aerial device the primary source of insulation will be the insulating protective equipment (personal protective equipment, rubber sleeves, live-line tools, and rubber gloves).

Note: Only insulating aerial devices tested and rated for the application and use provided in Table 6-4 are allowed to be used when working on overhead lines.

Table 6-3 Insulating Device Categories

Category	Description
A	Aerial devices designed and manufactured for work in which the boom is considered primary insulation (bare-hand work) must have all conducted components at the platform end bonded together to accomplish equipotential of all such components. Mark devices at the platform indicating such bonding. Equip aerial devices with a lower test electrode system. When these devices are qualified for work above 138 kV, equip them with a gradient control device and conductive shield(s) over the lower test electrode system. For those devices with ratings 138 kV and below, conducting shield(s) over the lower test electrode system are required. The necessity of gradient control device is to be determined by the qualification test.
B	Aerial devices designed and manufactured for work in which the boom is not considered primary insulation, but secondary, such as that using insulating (rubber) gloves. Isolation or bonding of the conductive components at the platform end is not a requirement. Equip aerial devices with a lower test electrode system.
C	Aerial devices designed and manufactured for work in which the boom is not considered primary insulation, but secondary, such as that using insulating (rubber) gloves. Isolation or bonding of the conductive components at the platform end is not a requirement. These aerial devices are not equipped with a lower test electrode system and are designed for 46kV and below.

Note: Bare-hand work is prohibited.

Table 6-4 Application and Uses of Aerial Devices

Category	Bare-Hand	Gloving	Hot Stick*	Construction De-energized
A	X	**	X	X
B	**	X	X	X
C		X	X	X
Non-Insulated			X	X

** Aerial device is used as a work platform*

*** An aerial device manufactured as a Category A may be modified and used as a Category B and a Category B may be modified and used as a Category A. In the event this is done, give particular attention to the appropriate qualification test, gradient control devices, conductive shields, conductive liners, and bonding.*

6-13.3.1 Insulated Buckets.

An insulated bucket of an aerial lift is provided with a non-conductive bucket liner. Support the liner by the inside bottom surface of the basket. Do not provide drain holes or access openings in the insulating buckets.

Tools and other equipment carried in the bucket must be stowed carefully to avoid damaging the non-conductive liner.

6-13.3.2 Testing and Certification.

Establish testing intervals by the owner in accordance with the manufacturer's recommendations and ANSI/SIA 92.2. Intervals are dependent upon component function and exposure to wear, deterioration and other agents which adversely affect component life. Testing and inspection frequencies are shown below. In addition, conduct a dielectric test of the bucket liners annually in accordance with the requirements of ANSI/SIA 92.2, below:

- Frequent Inspection and Test performed at daily to monthly intervals; and
- Periodic Inspection and Test performed at one to twelve month intervals.

ANSI/SIA 92.3, ANSI/SIA 92.5, and ANSI/SIA A92.6, whichever is applicable for the construction, type and manufacture of the lifts, require more frequent inspection, testing and certification as shown below:

- Frequent Inspection performed at 3 month intervals or 150 hours of use, whichever comes first; and
- Annual Inspection performed no later than 13 months from the date of the prior annual inspection.

Note: For the Navy, maintenance and testing requirements follow the requirements of NAVFAC P-300 for aerial lifts and boom trucks.

6-13.3.3 Maintenance.

Perform periodic maintenance in accordance with the manufacturer's operations and maintenance manual. Perform electrical tests on insulation no less than annually in accordance with ANSI/SIA A92.2, to the values referenced in the following tables:

Table 6-5 Periodic Electrical Test Values for Insulating Aerial Devices with a Lower Test Electrode System (Category A and Category B)

Unit Rating	60 Hz (rms) Test			Direct Current Test		
	Voltage	Maximum Allowable Current	Time	Voltage	Maximum Allowable Current	Time
46 kV & below	40 kV	40 microamperes	1 minute	56 kV	28 microamperes	3 minutes
69 kV	60 kV	60 microamperes	1 minute	84 kV	42 microamperes	3 minutes
138 kV	120 kV	120 microamperes	1 minute	168 kV	84 microamperes	3 minutes
230 kV	200 kV	200 microamperes	1 minute	280 kV	140 microamperes	3 minutes
345 kV	300 kV	300 microamperes	1 minute	420 kV	210 microamperes	3 minutes
500 kV	430 kV	430 microamperes	1 minute	602 kV	301 microamperes	3 minutes
765 kV	660 kV	660 microamperes	1 minute	924 kV	462 microamperes	3 minutes

Table 6-6 Insulating Aerial Devices without Lower Test Electrode System (Category C)

60 Hz (rms) Test				Direct Current Test		
Unit Rating	**Voltage**	**Maximum Allowable Current**	**Time**	**Voltage**	**Maximum Allowable Current**	**Time**
46 kV & below	40 kV (rms)	400 microamperes	1 minute	56 kV	56 microamperes	3 minutes

Table 6-7 Insulating Aerial Ladders and Insulating Vertical Aerial Towers

	60 Hz (rms) Test			Direct Current Test		
Unit Rating	**Voltage**	**Maximum Allowable Current**		**Voltage**	**Maximum Allowable Current**	**Time**
46 kV & below	40 kV (rms)	400 microamperes	1 minute	56 kV	56 microamperes	3 minutes
20kV and below	20 kV (rms)	200 microamperes	1 minute	28 kV	28 microamperes	3 minutes

Table 6-8 In Field Tests for Insulating Aerial Devices – ANSI/SIA A92.2 Section 5.4.3.2 Item 10(c)

Aerial Device Category	AC Voltage	Maximum Allowable Current	Time of Test
A or B	Line to Ground	1 milliampere / kVAC	3 minutes
A or B	Line to Ground	0.5 microamperes / kVAC	3 minutes
Note: This test may be used as a Periodic Test when the voltage is at least double that of any circuit on which the aerial device is to be used, but not exceeded the Qualifications Voltage of the aerial device.			

Retain all records for the annual and frequent inspections documentation for a period of at least three years for Manually Propelled Elevating Aerial Platforms (ANSI/SIA A92.3), Boom Supported Elevating Work Platforms (ANSI/SIA A92.5), and Self-Propelled Elevating Work Platforms (ANSI/SIA A92.6). Retain written, dated and signed inspection and periodic test reports and records for five years for Vehicle-Mounted Elevating and Rotating Aerial Devices as required by ANSI/SIA A92.2.

6-13.4 General Requirements.

Comply with the following requirements:

- Test lift controls each day prior to use if the lift is being used that day, to determine if the controls are in safe working condition. Test lift controls on a monthly basis when not in use;

- Do not alter the insulated portion of an aerial lift in any manner that might reduce its insulating value;

- Ensure the manufacturer's operation manual is available with any aerial lift;

- Do not allow anyone to touch the truck or equipment when aerial equipment is operating near energized conductors. The vehicle must be grounded, or if not grounded, must be considered as energized and properly barricaded. Ensure that everyone in the vicinity of the truck or equipment is aware of and protected from the hazards of step and touch potential;

- The requirements for use of rubber or other protective equipment while working on poles and structures also apply to work from aerial buckets. Consult UFM 3-560-01 for additional information on rubber protective equipment;

- Use a body harness with a secured safety lanyard for any work from an aerial bucket, basket or platform unless the manufacture of the equipment precludes use of a harness based on the manufacture of the equipment and applicable OSHA standards. Provide arc-rated harnesses in accordance with ASTM F887. Do not belt off to an adjacent pole, structure, or equipment while working from an aerial lift. Use the manufacturer's provided attachment point on the equipment;

- Do not wear climbers while performing work from an aerial lift;

- Wear personnel protective equipment in accordance with UFM 3-560-01;

- Only qualified electrical workers may operate aerial lift equipment within the restricted approach boundary distances specified in UFM 3-560-01;

- Operate any vehicle or mechanical equipment capable of having parts of its structure elevated near energized overhead lines so that a clearance is maintained in accordance with the limited approach boundary limits for exposed movable conductors in Table 3-1 of UFM 3-560-01. However, under any of the following conditions, the clearance may be reduced;

- If the vehicle is in transit with its structure lowered, the clearance may be reduced to 4 ft (122 cm). If the voltage is higher than 50 kV, increase the clearance requirement by 4 in (10 cm) for every 10 kV over that voltage.

- If insulating barriers are installed to prevent contact with the lines, and if the barriers are rated for the voltage of the line being guarded and are not a part of or an attachment to the vehicle or its raised structure, the clearance may be reduced to a distance within the designed working dimensions of the insulating barrier.

- If the equipment is an aerial lift insulated for the voltage involved, and if the work is performed by a qualified electrical worker, the clearance (between the uninsulated portion of the aerial lift and the power line) may be reduced to the restricted approach boundary distances specified in UFM 3-560-01.

- Insulated aerial lifting devices used for working on energized electrical systems must be specifically designed for that sole function. Use the aerial lift only for electrical-related work;

- Stay clear of pressurized oil or air escaping from a ruptured line or fitting. The pump, compressor, or engine must be stopped as soon as a leak is detected;

- All hydraulic and pneumatic tools that are used on or near energized equipment must have non-conducting hoses rated for no less than normal operating pressure;

- Do not exceed the manufacturers' boom and bucket load limits; and,

- Provide both platform (upper) and lower controls for articulating boom and extensible boom platforms, primarily designed as personnel carriers. Upper controls must be in or beside the platform within easy reach of the operator. Lower controls must provide for overriding the upper controls. Controls must be plainly marked as to their function. Lower level controls must not be operated unless permission has been obtained from the worker in the lift, except in case of emergency. All controls must be clearly identified as to their function and protected from damage and unintentional actuation. Design the boom position and carrying attachment controls to return to their neutral position when released by the operator.

Note: The aerial lift may become energized when the boom or the aerial basket comes in direct contact with energized conductors or equipment.

6-13.5 Training.

Train operators in accordance with the manufacturer's operation manual and the applicable ANSI standard. Any ground safety personnel acting as the ground person during the operation of the lift must be qualified and have received training in accordance with the manufacturer's operation manual and the applicable ANSI standard. Operators must also be trained for working from aerial lifts according to OSHA 29 CFR 1910.269, 1910.333(c), and NFPA 70E, Article 130.

Note: Follow the licensing requirements of NAVFAC P-300 for Navy personnel.

6-13.6 Driving Precautions.

Comply with the following requirements:

- Drivers of aerial bucket trucks must be constantly alert to the fact that the vehicle has exposed equipment above the elevation of the truck cab and will be sure that roadways provide the necessary overhead clearance. They must avoid the need to move the truck into the opposing traffic stream by prior planning of the order of work;

- Any backing of the truck must be done slowly and under the direction of one person on the ground. This person must have an unobstructed view of the intended path of the vehicle;

- Do not move a truck with the boom elevated in working position. Secure booms in the cradled position prior to any movement; and

- When traveling to and from job sites, pin-on type buckets must be removed and stored on the truck, or secured in a horizontal position to the boom, to avoid obstructing the driver's vision.

6-13.7 Setting Up and Knocking Down at the Job Site.

Upon arriving at the work area, legally park the truck while the vehicle and pedestrian warning signs, lights, and barricades are being placed. Give careful consideration to the location of overhead conductors and the surrounding conditions before the truck is moved into the work position. Make every effort to place the truck so that all work areas at that location may be reached by the boom without movement of the truck. Perform a job site "tail-gate" safety briefing including application of operational risk management principles.

Note: Air Force Only – Job site "tail-gate" safety briefings including application of operational risk management principles and actions must be documented in writing.

Comply with the following requirements:

- Examine available footing for the truck wheels and outriggers carefully and exercise extra caution if there is snow, ice, mud, soft ground, or other unusual conditions. Blind ditches, manholes, culverts, cesspools, wells, and similar construction features are additional possible hazards;

- Before lowering the stabilizers, outriggers, or hydraulic jacks, the operator must be certain that no persons are close enough to be injured. Wheels must be chocked and cribbing may be needed to ensure stability of the truck body;

- When working on an inclined road or street, check each outrigger or jack to make sure a stable setup has been achieved. The truck must be approximately level as viewed from the rear;

- A warm-up period for the truck is usually needed at the beginning of each day's work. This time must vary with different truck makes and models, and with different temperatures. Follow the manufacturer's recommendations;

- When lowering the boom to a cradled position, workers must stand clear of the path of the bucket and boom; and

- When work is completed, secure aerial ladders in the lower traveling positions by the locking device on top of the truck cab and the manually operated device at the base of the ladder before the truck is moved for highway travel.

6-13.8 Operating at the Job Site.

Comply with the following requirements:

- One worker must be responsible for all operations required in placing the bucket in operating position, use of the bucket, and restoring it to the traveling position. This worker must check to ensure the truck handbrake is set, the wheels of the truck chocked, and if the truck is equipped with outriggers or stabilizers, they are in the down position. If this worker has any doubt as to the stability of the truck, particularly because of the terrain, the outriggers or stabilizers must be specially checked for proper positioning before a load is lifted;

- When the boom must be maneuvered over a street or highway, necessary precautions must be taken to avoid mishaps with traffic or pedestrians. Consider use of a flagman;

- Workers must enter the bucket only with the bucket resting in the position for which entry was designed;

- The operator must face in the direction in which the bucket is moving so that all obstructions are noted and avoided when the bucket or boom is raised, lowered, or rotated;
- The operator must follow the proper sequence prescribed by the manufacturer in raising the boom section;
- Before reaching any area containing obstructions, the operator must test all controls of the boom and bucket to ensure that they are in proper working order;
- The operator must suspend operations upon indication the controls are not working properly;
- Raising the bucket directly above energized conductors or equipment must be kept to a minimum;
- When possible, locate buckets to the side of lines, to help workers aloft avoid contacting energized conductors and equipment;
- If the work is within reach of energized conductors or equipment, a worker must be properly protected with rubber sleeves and rubber gloves of an insulation rating appropriate for the voltage level;
- Energized conductors and equipment must be covered with protective devices when necessary to perform the work safely;
- Adequate clearance must be maintained so that protruding tools must not come in contact with conductors, tree limbs, or other obstructions;
- A worker must always stand on the floor of the bucket. Never on top of the bucket or on planks placed across the top of the bucket, or tools/materials within bucket while performing work. Do not alter buckets to facilitate additional reach;
- A worker must not belt onto an adjacent pole, structure, or equipment while performing work from the bucket;
- The operator must ensure that hand lines and tools do not become entangled with the levers that operate the boom; and
- Secure all tools not in use when working aloft.

When the bucket is being used in any manner that might result in contact between an energized conductor and the bucket, boom, or any attachment thereto, the vehicle must

be considered energized at line potential, and the following safe practices observed for ground operations:

- Materials or tools must not be passed between a worker on the vehicle and a worker on the ground, unless both workers wear rubber gloves and use other required protective devices;
- Workers operating ground controls must be on the vehicle or insulated from the ground using rubber gloves and other protective equipment;
- Before entering or leaving the vehicle, a worker must make sure that the boom or bucket is not in contact with or near energized equipment;
- Workers on the ground must not work directly below the work area of the bucket; and
- Tools or materials must not be thrown to or from the elevated bucket.

6-13.9 Aerial Lift Equipment Operation near Energized Electrical Equipment.

Only qualified electrical workers may operate aerial lift equipment between the approach distances given provided in UFM 3-560-01. Comply with the following requirements:

- An approved Job Hazard Analysis (JHA) and Standard Operating Procedures (SOP) must be completed;
- The activity is being performed under the direct supervision of a designated person who is trained and competent in this type of work;
- The distances between energized parts and the aerial lift equipment is monitored while the aerial lift equipment is being moved and or repositioned;
- The aerial lift equipment is grounded; and
- No one, other than necessary workers, is allowed within 10 ft (3.0 m) of the equipment during its operation. Workers are to perform their work while on the equipment, not from a position on the ground.

6-14 TREE TRIMMING AND BRUSH REMOVAL.

Tree trimming and brush removal is necessary to maintain the integrity of electric lines and apparatus and provide right-of-way clearance.

6-14.1 Training Qualifications.

Permit only workers certified as “Qualified Climbers” to climb trees. Work accomplished from an aerial lift must only be performed by workers qualified in use of the aerial lift. If using ladders, review the requirements for their safe use. In all cases, only qualified workers must perform work near energized lines.

Trimming must be done in a manner that does not damage the tree, and meets ANSI Z133.1 requirements. The worker must be qualified to do tree trimming.

6-14.2 Public Safety.

Erect suitable signs and barriers to prevent the public from passing under trees being trimmed, and to prevent stumbling over brush on the ground. Brush must not be piled on sidewalks, or left on streets and highways overnight.

6-14.3 Tool Safety.

Raise and lower tools with a hand line. Use only saws and pruning knives or shears for cutting limbs. Do not carry unnecessary tools up the tree. Do not hang or store tools on tree limbs.

6-14.4 Work Near Energized Lines.

Be aware that lines may not always be de-energized for tree trimming operations. Review the rules for live line safety, and for climbing and working on a pole. Especially be aware of the energized lines in the area and the relevant dangers.

When working near energized lines, arrange the safety line so that a slip or fall will carry you away from the energized lines.

6-14.5 Climbing and Working on Trees.

Comply with the following requirements:

- Workers in trees must use harnesses/belts and safety straps;
- Climbing trees must be avoided unless ladders or aerial lifts cannot provide the necessary access;
- Workers in trees must be careful to prevent contact with aerial electric and telephone wires passing through the trees;
- If climbers are used, make sure they are tree climbers approved for the bark thickness of the tree being climbed. Never use pole climbers;

- Use a harness and safety strap or lifeline. Place the strap around a tree limb of sufficient size to hold the worker's weight, but never around the tree limb being cut;

- Do not stand on tree limbs too small to support your weight. Extreme care must be exercised when working in trees that have brittle wood; and

- Check each tree for dead or broken tree limbs when climbing. Remove unsound tree limbs during the climb. Lower cut-off tree limbs with a rope because falling tree limbs can cause injury or property damage.

6-14.6 Felling Trees.

Before felling trees, inspect tools to be used (such as ropes, tackle, ladders, and chain saws) to ensure they are in proper condition. Place signs warning pedestrian and vehicular traffic of the danger from work being performed. Station flagmen if necessary.

Inspect each tree for obstructions (conductors and fences) in the line of fall. If possible, de-energize nearby conductors. Trees taller than 25 ft (7.6 m) in height and larger than an 8 in (203 mm) trunk diameter must have ropes attached before felling. The ropes can be used to guide the tree as it falls. Always have a clear a path of retreat when felling a tree.

6-14.7 Power Trimming Equipment.

Chain-saw operators must be familiar with and follow the manufacturer's operating instructions. Comply with the following requirements:

- Carefully inspect chain saws prior to each use. Chain saws must be clean and sharp, and in sound mechanical condition with all guards, spark arresters, mufflers, handles, and other items properly installed and adjusted;

- Permit only workers trained in chain saw operation to perform the work;

- Clear away brush or other material that might interfere with cutting operations before starting to cut;

- Wear appropriate personal protective equipment when operating the chain saw. Eye, ear, hand, foot, and leg protection are minimum requirements;

- Never operate a chain saw when physically tired or under the influence of alcohol, medication, or other drugs;

- Do not store fuel near flammable materials. Fuel for chain saws must be stored in approved, vented containers clearly marked to show the contents;

- Do not start the chain saw within 10 ft (3.0 m) of a fuel container; and

- Do not fuel the chain saw with it running or hot, or with open flame nearby.

6-14.8 Right-Of-Way Brush Removal.

Brush clearance is part of electrical maintenance work to clear right-of-ways. Comply with the following requirements:

- Wear personal protective equipment; i.e., eye protection, hearing protection, and proper clothing;

- Cutters felling heavy brush or small trees must give sufficient clearance to other personnel. Never work so close that one worker could injure another with a swinging ax or hook;

- Brush chippers must be operated only when authorized. The worker must stand to the side of the chipper chute while feeding the butt end of brush into the chipper first. Use the automatic shut-off/stop control at the operator's station in an emergency;

- Do not hang tools such as saws, axes, bush hooks, pruning shears, scythe blades, and pitch forks in bushes or small trees, or out of the obvious view of other workers; and

- Restrict personnel assigned to remove or pile brush to maintain a safe distance behind workers using the cutting tools.

6-15 WORKING NEAR COMMUNICATIONS ANTENNAS.

If personnel work near communications antennas that are attached to electric power line structures, apply IEEE Std 1654 as a guide for the safety requirements.

CHAPTER 7 OUTAGES

7-1 TROUBLESHOOTING AND FAULT DETECTION METHODS.

Troubleshooting procedure:

- Install fault detectors
- Determine fault type
  - Open Conductor Fault – cable completely broken or interrupted at the location of the cable fault.
  - Shorted Fault – low resistance continuity path to ground.
  - High Impedance Fault – resistive path to ground (shunted fault) that is large in comparison to the cable's surge impedance.
- Test the cable
  - Fault Resistance and Loop Test – Insulation Resistance Insulation tester
  - TDR (Test Domain Reflectometer) Test
  - DC High Potential Test – surge generator connected to cable under test
  - Bridge Method
- Analyze the data
- Localize – Pre-locate the fault
- Locate – Pinpoint the fault

For cable failures, test to determine which cables to replace first:

- Insulation breakdown (water / trees). RF Test-point Injection Probing:

  Step 1: Couple an RF signal through elbow test-points;

  Step 2: Experimentally confirmed coupling greater than 1MHz signal; and

  Step 3: Measure attenuation, velocity of propagation as a function of instantaneous cable voltage. The mechanisms: at cable voltage V=0 the voids filled with water in the water tree are not connected

and at higher voltage, micro-channels open due to Maxwell Mechanical Stresses and water will penetrate the channels making electrical contact.

- Loss of protective grounding shield - concentric neutrals (CN). Detected imbalances or lack of CN current as a sign of degradation:
  - Magnetic CN probing - measure current in concentric neutrals by sensing emanating magnetic field.
  - Anisotropic Magnetic Resistance (AMR) - measure return or phase imbalance currents (10%-20%).

7-2 FAULT ANALYSIS.

Fault in a circuit is any failure that interferes with the normal system operation:

- Lightning strikes cause most faults on high-voltage transmission lines producing a very high transient that greatly exceeds the rated voltage of the line:
  - This voltage usually causes flashover between the phases and/or the ground creating an arc.
  - Since the impedance of this new path is usually low, an excessive current may flow.
- Transient faults are faults involving ionized current paths. They usually clear if power is removed from the line for a short time and then restored:
  - Approximately 75% of all faults in power systems are transient in nature.
- Permanent faults where one, two or all three phases break or insulators break due to fatigue or inclement weather are faults that remain after a short removal and restoration of power.

Knowing the magnitude of the fault current in a power system is important when selecting protection equipment (type, size, etc.). Type of faults:

- Symmetrical three phase (3P) – symmetrical fault when, before the fault only AC voltages and currents are present, but immediately after the fault a transient DC component is added on top of the symmetrical AC component;

- When the fault occurs, the AC component of current jumps to a very large value, but the total current cannot change instantly because of the series inductance of the machine.
- The transient DC component is just large enough such that the sum of AC and DC components just after the fault equals the AC current just before the fault.
- The DC components decay quickly, but they initially average about 50-60% of the AC current flow the instant after fault occurs.
- There are three periods of time:
  - Sub-transient period – first cycle or so after fault – AC current is very large and falls rapidly; current can be as much as 10 times the steady-state fault current.
  - Transient period: current falls at a slower rate; current is often 5 times the steady-state fault current.
  - Steady state period – current reaches its steady value.

- Single line-to-ground (SLG) unsymmetrical fault;
- Line-to-line (LL) unsymmetrical fault; and
- Double line-to ground (DLG) unsymmetrical fault.

7-3 DOCUMENTING/REPORTING.

Documentation and reporting must be performed according to National Testing Standards (NTS). This means recording problems or failures, reasons for these problems, time to repair, costs both in materiel and labor, and suggestions to avoid future problems of the same type. Check with Activity lead office for specific outage reporting requirements. Suggested report data items include:

- Installation name;
- Incident date and time;
- Area(s) affected by outage;
- Reset date and time;
- Outage duration;
- Name of operator in charge;

- Name of person who re-set the switchgear, relay, or PLC;
- Name of person making report;
- List of contractors or personnel doing permitted work on electrical system at time of outage. Attach copies of permit(s) to the report;
- Switchgear relay readings;
- Amperage and voltages at time of outage, if possible;
- Primary alarms and outage as determined by PLC, SCADA, or switchgear;
- List outage cause(s), failed equipment, and specific failure locations;
- Implemented remedy to return to power;
  - Was damage found prior to reset, or determination of cause? (y/n);
  - Was damage fixed or isolated prior to re-energizing? (y/n);
- Estimated outage cost (labor and equipment); and,
- Suggested system or procedural modifications to make future outages less likely.

7-4 SCHEDULING AND PLANNING.

Outages consist of unplanned and planned (scheduled) events. An unplanned outage is where equipment is unexpectedly taken out of service for a variety of reasons, from weather events to grid overload. Return to service depends upon severity of outage and the resources available to evaluate and correct the failure.

A planned outage is where the equipment is taken out of service on a pre-established schedule, such as for maintenance actions or construction. Control outage costs by properly planning, sequencing, and executing the system switching and cutovers. Consider the following when planning an outage:

- Create a checklist of everything to consider before shutdown and when to consider it. Include in checklist the field verification of as-built system(s), including CT and PT ratios, conductor size and length, conductor insulation types, 100% or 133% insulation levels, and insulation temperature level MV-90 or MV-105, relay make/model/settings, breaker make/model/short circuit rating, and switchgear make/model/bus rating/short circuit rating.

- Ensure the proper tools, supplies, and technologies are available and on hand to execute the outage and accomplish the scheduled work.
- Establish good contractor relations and communication avenues for normal and emergency discussions.
- Clearly define expected contractor and in-house actions, and timing of actions, to establish an effective workflow. Review high-risk areas and update actions if planned conditions change.
- After outage is completed, evaluate shutdown effectiveness, and update procedures and checklists for future outages.

CHAPTER 8 POWER SYSTEM STUDIES AND COMPUTER MODELS

8-1 TOOLS, DATA AND DEVELOPMENT.

8-1.1 General Process.

Maintain a power system study for the primary distribution system. The power system study includes the following:

- Field verification of as-built system configuration including CT ratios, PT ratios, conductor size, conductor insulation type, 100% or 133% insulation level, and insulation temperature level MV-90 or MV-105, conductor length, relay make/model/settings, breaker make/model/short circuit rating, and switchgear make/model/bus rating/short circuit rating;
- Development of electrical layout and one-line drawings for the primary distribution system;
- Electrical analysis of the system; and
- Identification of recommended system changes and upgrades.

The various electrical analyses, referred to as a power system study, provide design confirmation of the inherent ability of the electrical power distribution system to perform reliably under normal and abnormal conditions. A power system study includes:

- Power flow;
- Short circuit;
- Arc flash;
- Electrical protection and coordination; and
- Specialty analyses, such as power quality or Aurora evaluation.

8-1.2 UFC 3-501-01 Requirements.

UFC 3-501-01 provides detailed requirements for electrical analyses and compliance is mandatory for the design of electrical systems at all facilities and installations. Upgrades or modifications to electrical systems to consider the design criteria in UFC 3-501-01, but it is not intended that an entire facility or system require modernization solely because of a minor modification.

Although UFC 3-501-01 does not specifically apply to an existing primary distribution system, apply its power system analysis criteria for exterior power distribution systems as supplemented by this UFC.

8-1.3 Software Requirements.

Specify the analysis software required for the power system study. If the power system study is provided by a contractor, require the contractor to provide the electronic software files with each submittal.

For the Air Force, only EasyPower is certified in accordance with AFI 33-210 for use on standard desktop systems connected to the Air Force Global Information Grid and placed on the Air Force Evaluated/Approved Products List. Other software products can be used on standard desktop systems connected to the Air Force Global Information Grid after they have been certified in accordance with AFI 33-210 and placed on the Air Force Evaluated/Approved Products List.

If the Activity has electrical analysis software, maintain the software at the latest available version. The latest software version is required for the following reasons:

- Electrical analysis software is not backwards compatible. Any models or revisions to models developed by contractors cannot be opened by an older version of the software; and
- The arc flash analysis requirements continue to evolve. The latest version of the software is required to ensure that any arc flash calculations comply with the current state of the art with respect to analysis methodology.

8-1.4 Periodic Updates.

Upon completion of an initial power system study, update the study as follows:

- Complete a new power system study every six years;
- Update the power system study when significant changes occur to the system. Examples of changes that require an update include;
  - Substation or switching station replacement.
  - Modification of utility transmission system supply.
  - Primary distribution system upgrade, such as conversion of one or more feeders from overhead distribution to underground distribution.
  - Major change to facilities within a base, such as construction of multiple facilities in support of a new mission;
- Update the power system study when significant changes occur to the industry standards that form the analytical basis for analysis. For example, an arc flash calculation will require an update if the equations

used for the analysis are changed by the applicable industry standards; and

- Complete an annual review of the electrical model when the annual electrical drawing review described in Section 3-9 is performed and update the model as necessary to reflect the existing electrical distribution system.

Note: Changes to the electrical distribution system require evaluation in accordance with UFC 3-501-01.

8-2 MODELING.

8-2.1 Equipment Naming Conventions.

Equipment naming is considered an important part of the base-wide electrical safety program. Civilian personnel, military personnel, and contractors should have no doubt regarding their work location and which equipment to work on. Coordinate with base personnel to develop a standardized naming convention for the following equipment:

- Substation equipment, including feeder designations;
- Transformers – pole mount and pad mount;
- Pad-mounted switchgear;
- Sectionalizing cubicles;
- Power poles; and
- Manholes.

8-2.2 Equipment Modeling.

Develop an electrical model of the primary distribution system that includes the following system elements as applicable for the system design:

- All utility connection points for the supply to the primary distribution system. Obtain the following from the utility for each connection access;
  - Three-phase short circuit current and associated X/R ratio.
  - Single line to ground short circuit current and associated X/R ratio.
  - Request minimum and maximum values for each short circuit type. If the variation between minimum and maximum short circuit values

has a significant effect at the primary distribution level, then provide calculations at both extremes.

- Substation equipment, including transformers, switches, circuit breakers, capacitors, and associated protective devices;
- Electrical system conductor type, size, and length – overhead and underground;
- Overhead distribution – all power poles that contain electrical equipment, lateral taps, or conductor size changes;
- Pad-mounted switchgear, including VFI settings or fuse sizes;
- Sectionalizing cubicles;
- Distribution transformers, including primary conductors from the upstream source and secondary side conductors to the service entrance equipment; and
- If the Activity is supplied by a prime power plant, include the prime power plant generators in the model and address the minimum and maximum numbers of generators that are expected to be in operation.

Identify missing data as part of the power system study and document assumptions made to complete the analysis. Examples of missing data include:

- Distribution system transformers with missing nameplates;
- Pole-mounted transformer nameplates – inaccessible without the use of lift equipment and likely corroded by outdoor exposure;
- Fuse size for internal fuses in distribution system transformers or some pad-mounted switchgear that cannot be confirmed without requiring extensive system outages;
- Size and type of aerial lines – might depend on available drawings and knowledge of exterior shop personnel; and
- Size and type of some underground lines – might depend on available drawings and knowledge of exterior shop personnel.

8-3 POWER FLOW.

8-3.1 Overview.

A power flow analysis is commonly called a load flow analysis; the terms are used synonymously. A power flow analysis determines voltages and power flow throughout the electrical system and provides insight into many aspects of system performance, including:

- Adequacy of voltage levels throughout the system;
- Current flow through all branches of the system;
- The ability of generators to supply required load without exceeding their rating;
- The ability of system equipment (such as switchgear, panels, transformers, or cables) to carry the required load without exceeding any ratings;
- Inappropriate or low reliability system lineups, including an evaluation of cross-connect and alternate feed capability;
- System expandability and choke points for load addition; and
- Equipment sizing and rating specifications for new/replacement equipment.

A power flow analysis includes an evaluation of system performance under various conditions and operating modes. Different conditions of interest might include:

- Cross connect capability between the feeders (partial or full);
- Proposed load additions;
- System changes involving re-powering loads from a different feeder (load re-balancing); and
- Variations in transformer tap settings.

8-3.2 Metering Data.

8-3.2.1 Utility Metering Data.

Obtain metering data from the utility, if applicable, for each metered location. The preferred format includes real and reactive power obtained at 15-minute intervals for a

period of several years. The purpose of this data is to establish peak power demand and when peak power occurs for each metered location.

8-3.2.2 Primary Distribution System Metering Data.

If the electrical system design includes metering or recording of the current on each distribution circuit, obtain this data to help establish the power demand on each circuit.

Note: If metering data is available from an installed Advanced Meter Infrastructure (AMI) system, obtain the trended load data as an input to the power system study.

Note: If primary distribution system power demand data is available from an Industrial Control System (ICS) with feeder metering, obtain the historical trended load data as an input to the power system study.

8-3.3 System Electrical Measurements.

Obtain electrical measurements, including voltage, current, power factor, voltage harmonic distortion, and current harmonic distortion, at accessible locations in the primary distribution system. Use collected data to accurately match replacement equipment to actual facility loads.

Note: The intent of this requirement is to establish, wherever possible, the typical system load. Power system studies performed at over 50 Air Force Bases have validated that the average transformer loading is about 20% to 25% of rated value during periods of peak demand. For example, if an Air Force Base has a summer peak demand of 20,000 kVA, the total connected transformer kVA might be as much as 100,000 kVA. When replacing transformers, size for actual system loading to reduce potential arc flash incident energy levels.

Note: Low-voltage measurements can often be taken on the secondary side of distribution transformers. Medium-voltage measurements can often be taken at some pad-mounted switchgear or sectionalizing cubicles.

8-3.4 Power Flow Analysis.

Perform a power flow analysis that accomplishes the following:

- Provides an assessment of peak demand on each distribution feeder;
- Identifies any ampacity limitations throughout the electrical system;
- Calculates voltage drop throughout the electrical system;
- Identifies any unusual system voltage associated with off-nominal transformer tap ratios;

- Include emergency power load flow analysis scenarios in the power flow model;
- Include alternate feeder load flow analysis where switching paths allow alternate load flow scenarios; and
- Include any prime power generation capability, including renewable energy sources.

8-3.5 Cross-Connect Analysis.

A cross-connect analysis is an extension of a power flow analysis and evaluates the capability of each system cross-tie location. Identify any ampacity or voltage drop limitations associated with each cross-tie location.

8-4 SHORT CIRCUIT ANALYSIS.

8-4.1 Overview.

A short circuit analysis provides a means to evaluate the following aspects of a power system:

- The ability of system distribution equipment (such as switchgear, cables, disconnect switches, panels, motor control centers, or bus ducts) to withstand the available fault current without damage;
- The ability of system protective devices (e.g.;, circuit breakers, fuses) to successfully interrupt a fault without failing;
- The adequacy of electrical protective device settings and sizes;
- System lineups that result in unacceptable levels of fault current; and
- Baseline fault current levels (maximum and minimum) for calculating arc flash energy levels.

Short circuit current levels for several types of faults are generally evaluated during a short circuit analysis, including:

- Three phase bolted fault – all three phases of a three-phase system short together with no appreciable fault impedance (generally produces the highest available fault currents and always produces the most fault energy);
- Phase-to-ground fault – one phase of a three-phase system shorts to ground (also called a line-to-ground fault or ground fault);

- Phase-to-phase fault – two phases of a three-phase system short together (also called a line-to-line fault); and
- Phase-to-phase-to-ground fault – two phases of a three-phase system short together and to ground simultaneously (also called a double line-to-ground fault).

8-4.2 Short Circuit Results.

Provide short circuit results for each bus in the system, including X/R ratio at each location. Provide short circuit results throughout the primary distribution system and extending to the service entrance bus of each facility. As a minimum, include three-phase and single line to ground faults in the power system study.

8-4.3 Equipment Duty Evaluation.

All equipment exposed to the short circuit current must be capable of withstanding the mechanical and thermal stresses caused by the current until the short circuit is isolated. Identify any equipment that is potentially exposed to a short circuit current that exceeds its interrupting rating.

8-5 ARC FLASH ANALYSIS.

8-5.1 Analysis Criteria.

Perform an arc flash analysis in accordance with UFC 3-501-01. Use the following criteria:

- Apply IEEE Std 1584 and IEEE Std 1584.1 for voltages below 15 kV;
- Apply IEEE C2 for overhead distribution above 15 kV; and
- Apply the equations referred to in NFPA 70E, Informative Annex D for pad-mounted equipment for voltages above 15 kV.

  Note: Electrical analysis software automatically defaults to these equations above 15 kV.

Test all the protective devices involved in the analysis to ensure that they are functioning properly and have not deviated from the design settings. If deviations are found, the protective devices must be retested and serviced as described in the manufacturer's instructions.

8-5.2 Arc Flash Labels.

Provide arc flash labels in accordance with UFM 3-560-01.

8-5.3 Maintenance and Testing Requirements.

An arc flash calculation result is based on the correct time-current response of an upstream protective device. If the following types of equipment are credited for clearing an arcing fault as part of an arc flash study, the equipment must have commissioning performed in accordance with NETA ATS, if new; and, periodic maintenance and testing performed in accordance with NETA MTS or NFPA 70B, if existing:

- Medium voltage power circuit breakers;
- Medium voltage pad-mounted switchgear;
- Low voltage power circuit breakers;
- Overcurrent protective relays;
- Switchboards and panel boards – main circuit breaker at each location and all circuit breakers rated for 225 amperes, or higher (molded case circuit breakers and insulated case circuit breakers); and
- Electronic trip units associated with the above equipment.

Refer to NETA MTS and NFPA 70B for the maintenance and test frequency.

8-6 ELECTRICAL COORDINATION.

8-6.1 Overview.

A properly protected and coordinated system will:

- Rapidly isolate a faulted circuit at the closest possible point upstream of the fault, while minimizing disruptions to unaffected portions of the system;
- Minimize damage to the faulted circuit or equipment by rapidly removing it from service;
- Minimize the possibility of damage to equipment upstream of the fault that “sees” the fault current, but is otherwise unaffected; and
- Minimize the possibility of catastrophic equipment failure, fire, and personnel hazards.

8-6.2 Coordination System Study Documentation and Criteria.

Ensuring proper electrical protective device settings is important to maintaining a reliable and safe electrical power distribution system. Document coordination studies in

accordance with UFC 3-501-01. Include protective device settings and fuse sizes in the documentation.

Apply the coordination criteria listed in Table 8-1. The criteria apply to the following:

- Overcurrent relays;
- Recloser control units;
- Pad-mounted switchgear containing vacuum fault interrupter (VFI) trip units;
- Pad-mounted switchgear containing fuses;
- Overhead distribution fused cutouts;
- Low voltage circuit breaker electronic trip units;
- Low voltage circuit breaker thermal-magnetic trip units; and
- Low voltage fuses.

Table 8-1 Electrical Protection and Coordination Criteria

Upstream Device	Downstream Device	Criteria
Relay or Recloser	Relay	A minimum margin of 0.4 seconds between time-current (TC) curves in the time delay region. No overlap between the TC curves for instantaneous elements with 10% margin.
Relay or Recloser	Switchgear Breaker and Fuse	A minimum margin of 0.3 seconds between the TC curve and the switchgear breaker/fuse curve in the time delay region. No overlap between the TC curves for instantaneous elements with 10% margin.
Switchgear Breaker	Switchgear Breaker	No overlap between TC curves. All tolerances are accounted for in the curves.
Fuse	Fuse	Total clearing time of downstream fuse must be below the minimum melt time of upstream fuse. Alternatively, the average clearing times of the fuses must not overlap with a 10% margin applied to each fuse. Alternatively, the I^2t of the downstream fuse must be lower than the I^2t of the upstream fuse. The I^2t requirement is considered satisfied if fuse manufacturer's selectivity ratio is maintained.
Fuse	MCCB	No overlap between MCCB TC curve and minimum melt time curve for fuse. Alternatively, no overlap between MCCB TC curve and average clearing time curve for fuse with 10% margin. No coordination above intersection of fuse TC curve and MCCB instantaneous curve.
MCCB	Fuse (Non-Current Limiting)	Total clearing time of fuse must be below the minimum trip time of breaker in the time delay region. Alternatively, the fuse average clearing time must be below the minimum trip time of breaker with 10% margin. Maximum fault current sensed by MCCB must be limited to below the MCCB instantaneous pickup.
MCCB	Fuse (Current Limiting)	Total clearing time of fuse must be below the minimum trip time of breaker in the time delay region. Alternatively, the fuse average clearing time must be below the minimum trip time of the breaker with 10% margin. Peak let-through current of fuse must be below the MCCB instantaneous pickup.
Transformers		Protective device must clear the fault before the transformer damage curve is exceeded. Conservatively use frequent fault damage curves. Upstream protective device setting must allow for transformer inrush without nuisance trip.
Cables		Protective device must clear the fault before cable I^2t damage curve is exceed.

Refer to the following appendices for additional guidance:

- Appendix C – recommended fuse sizes for overhead distribution and pad-mounted switchgear fusing; and
- Appendix D – recommended pad-mounted switchgear vacuum fault interrupter (VFI) trip settings.

8-6.3 Coordination System Study – Substations and Switching Stations.

Model all protective devices. Determine the required protection settings and confirm acceptable coordination and protection for the primary distribution extending from the utility supply to the substation, and from there to downstream distribution system equipment. This includes:

- Utility supply coordination with substation primary side relaying;
- Differential protection for transformers and buses;
- Reverse power protection, if installed;
- Main circuit breaker secondary side transformer overload protection;
- Main and feeder circuit breaker coordination;
- Main and cross-tie circuit breaker coordination; and
- Feeder circuit breaker coordination with downstream primary distribution system equipment.

8-6.4 Circuit Breaker Instantaneous Trips.

8-6.4.1 Main Circuit Breaker.

Do not specify instantaneous trips on main circuit breakers unless justified in the coordination study analysis. Main circuit breakers function as backup protective devices for the feeder circuit breakers and should not trip for a feeder fault unless the feeder breaker fails to trip.

8-6.4.2 Feeder Circuit Breaker.

The decision of whether or not to include an instantaneous trip on a particular feeder circuit breaker relay depends on 1) the downstream devices with which it has to coordinate, 2) the line length, 3) the presence of automatic circuit breaker reclosing and 4) the need for coordination with downstream overcurrent protective devices. Depending on the circuit design, it might be very difficult to coordinate with downstream

fusing or vacuum fault interrupter trip units unless an instantaneous trip is set very high or is disabled. Apply the following criteria:

- Provide instantaneous trips for circuit breakers supplying predominantly overhead distribution when automatic circuit reclosing is applied;
- Disable instantaneous trips for underground distribution circuits that include downstream pad-mounted switchgear fusing or vacuum fault interrupter trip units. Select circuit breaker trip time delays to coordinate with downstream protective devices; and
- Instantaneous trips can be provided for distribution circuits that supply a single facility.

8-6.5 Feeder Circuit Breaker Relay Settings for Underground Distribution.

Apply IEEE C37-230 to distribution lines as a guide for system protection. Evaluate the specified settings with downstream pad-mounted switchgear fuse sizes or vacuum fault interrupter (VFI) trip settings. Adjust settings for all protective devices as needed to optimize coordination for each distribution feeder.

8-7 AURORA ANALYSIS.

Aurora is a term applied to a particular type of power system vulnerability in which rotating electrical equipment (motors and generators) is deliberately subjected to opening breakers and closing them out of synchronism with utility frequency. The induced mechanical and electrical stresses results in equipment exceeding maximum torque limits and equipment damage/failure.

Assess each Activity regarding its Aurora vulnerability. Figure 8-1 summarizes the Aurora evaluation process. Ensure mission critical motors and prime power-capable generators are specifically evaluated during the assessment. Update assessment and protective measures whenever new critical equipment is installed.

If an evaluation determines that a vulnerability exists, provide recommendations regarding protection methods. Protection options include a combination of:

- Adding protective devices designed to detect an Aurora event and isolate vulnerable systems and equipment before damage can occur. Known protective devices include the Schweitzer SEL-700G Generator Protection Relay, SEL-751A Feeder Protection Relay, and the Cooper Rotating Equipment Isolation Device (REID);
- Ensuring Activity utility control system is isolated from exterior communication networks; and

- Maintaining a strong password/access control protocol to Activity utility control network/software.

Figure 8-1 Aurora Vulnerability Assessment Flowchart

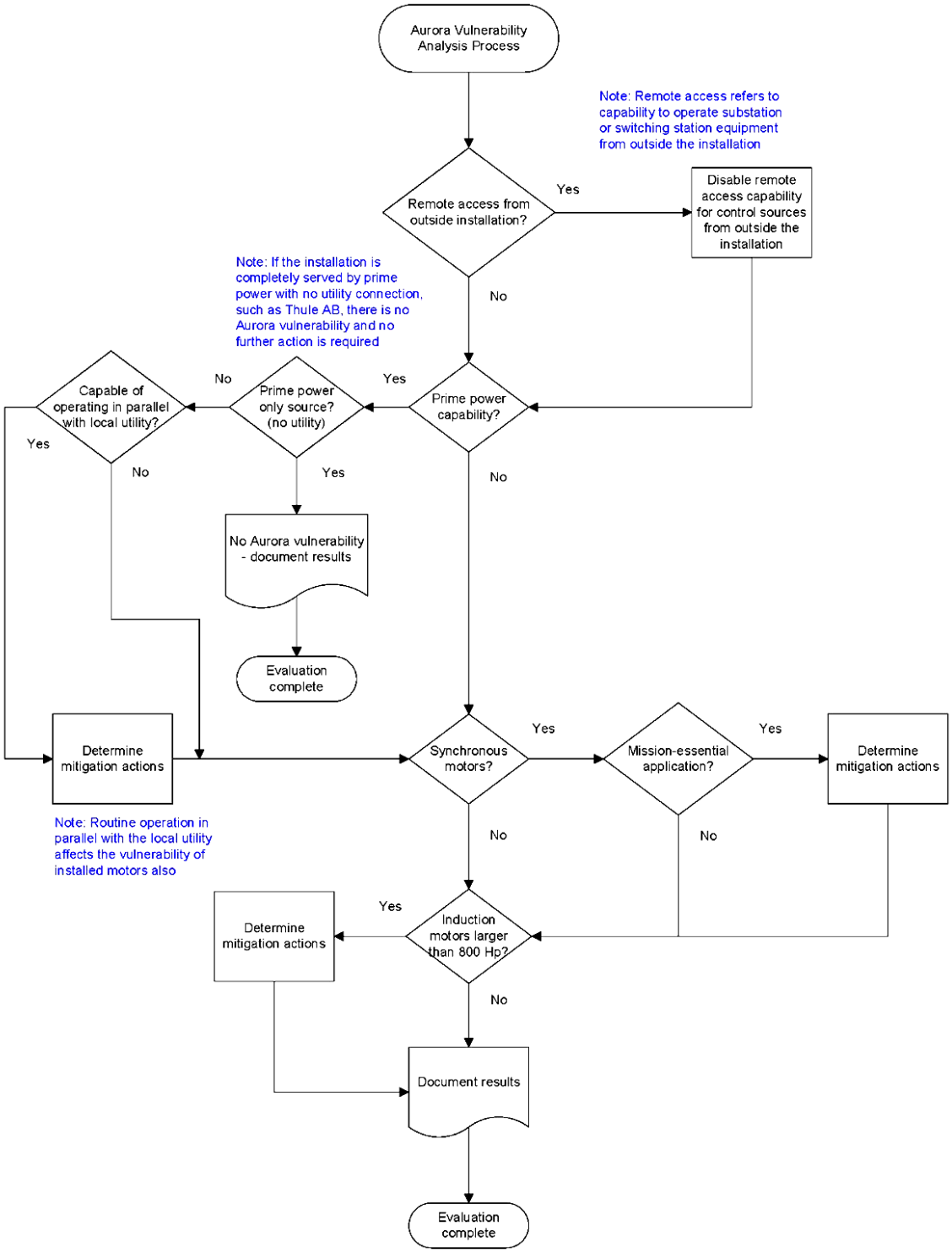

CHAPTER 9 POWER AVAILABILITY/RELIABILITY/RESILIENCY

9-1 METRICS.

The metrics for a power system include outages, time of outages, lengths of outages, time between outages and power quality (which in itself requires voltage, frequency, harmonics, and power factor).

9-2 POWER QUALITY.

Power Quality is the concept of powering and grounding electronics equipment in a manner that is suitable to the operation of the equipment and compatible with the premise wiring system and other connected equipment. A high level of power quality is generally understood as a low level of power disturbances; however, a high level of equipment tolerance may also be an effective solution. Power quality can be a broad concern depending upon the end user or mission perspective, ranging from voltage interruption, sags, transients and harmonics and/or current transients and harmonics that negatively affect utilization equipment. Understanding the implied definition by the end user will assist in determining what the root cause of the disturbance is and what/where monitoring should take place.

Evaluate power quality in accordance with IEEE 1159. Apply IEEE 519 for the evaluation of harmonic distortion limits.

9-2.1 Monitoring.

Power Quality Monitoring (PQM) generally involves line voltage sags, interruptions, voltage swells, and transients (generally short duration, high frequency voltage fluctuations). PQM can also include analysis of harmonic waveforms and grounding systems. During PQM, special attention is paid to time, duration, location, and magnitude of both voltage and current waveforms with respect to each and other system disturbances or characteristics such as capacitor switching.

9-2.2 Harmonics.

Harmonics are rarely an issue. Harmonics, by definition, is a sinusoidal component of a periodic wave or quantity having a frequency that is an integral multiple of the fundamental frequency.

Harmonics are generally a negative consequence to having non-linear loads. Typical harmonic “generators” are:

- Converters;
- Arc Furnaces;
- Static VAR Compensator;

- Inverters for Dispersed Generation;
- Electronic Phase Control;
- Switched Mode Power Supply (i.e. Computer Power Supplies);
- Pulse Width Modulation; and
- Electronic Ballasted Lighting.

These harmonic effects can cause:

- Current harmonics cause an increase in copper (conductor) losses and stray flux losses. As a result, neutral conductors and transformers can experience excessive heating, beyond what they are rated for. De-rating of electrical equipment or the use of K rated transformers, designed to handle the harmonic contribution, are differing approaches;
- Current harmonics can also cause issues with circuit breakers tripping because of reaching thermal limits. In addition, Total Harmonic Distortion (THD) levels greater than 10% may affect relay / breaker operation;
- Voltage harmonics cause an increase in iron losses within the transformer; and
- Voltage harmonics may cause the premature failure of switchgear insulation.

9-2.3 Voltage Unbalance.

Voltage unbalance is rarely an issue. Low or high voltage might be an issue, but usually not voltage unbalance unless a single-phase voltage regulator has failed.

- Voltage unbalance in a three-phase system takes place when the magnitudes of phase or line voltages are different and the phase angles differ from the balanced conditions, or both.
  - Voltage unbalance is defined as the ratio of the negative sequence voltage component to the positive sequence voltage component.
- Variations in single-phase loading cause the currents in the 3-phase conductors to be different, producing different voltage drops and causing the phase voltage to become unbalanced.
- When unbalanced phase voltages are applied to 3-phase motors, the phase voltage unbalance causes additional negative-sequence currents to circulate in the motor, increasing the heat losses primarily in the rotor.

9-2.4 Phase Current Imbalance.

Phase current imbalance describes a common condition that can cause a distribution line fuse to blow if a phase is unbalanced in relation to current on the other two phases. Connect distribution system single phase loads such that a balanced condition exists between the three individual phase currents.

9-3 PERFORMANCE AND EVALUATION.

Performance and evaluation of an electrical distribution system generally focuses on the service quality. The two aspects of service quality are power quality and system reliability. Power quality is discussed in Chapter 9. System reliability is evaluated at a number of levels:

- Utility Supply: Reliability of incoming power is of paramount importance to the end user or mission. There are numerous acceptable Reliability Indices. The three major time indices are:

  – System Average Interruption Frequency Index (SAIFI),

  $$\boldsymbol{SAIFI} = \sum(N_i) \ / \ N_T$$

  Where,

  Σ = Summation function.

  N_i = Total number of customers interrupted.

  N_T = Total number of customers served.

  – Customer Average Interruption Duration Index (CAIDI), in minutes;

  $$\boldsymbol{CAIDI} = \sum(r_i * N_i) \ / \sum(N_i)$$

  Where,

  Σ = Summation function.

  r_i = Restoration time, in minutes.

  N_i = Total number of customers interrupted.

  – System Average Interruption Duration Index (SAIDI), in minutes,

  $$\boldsymbol{SAIDI} = \sum(r_i * N_i) \ / \ N_T$$

  Where,

Σ = Summation function.

r_i = Restoration time, in minutes.

N_i = Total number of customers interrupted.

N_T = Total number of customers served.

- Configuration: Typically represented by one-line diagram or system map.
- Control and Protection: The one-line diagram to contain all the protective devices of the system. Utilize this to perform a protective device coordination analysis as directed by IEEE 242.
- Physical Installation: A thorough inspection of the physical condition of a (mission's) distribution system can be utilized, hopefully on a continual basis, to improve reliability. All systems serving critical loads or process should be part of a comprehensive preventive and predictive maintenance (PPM) program, which combines periodic visual inspections of equipment with mechanical and electrical testing to identify and correct deteriorating conditions before they result in unscheduled outages. Guidelines for inspection and testing of electrical equipment can be found in the relevant IEEE and ANSI standards documents, in published data, in NFPA 70B, and in the standards of the International Electrical Testing Association.
- Operations and Maintenance: Mentioned earlier that an effective PPM program is important in achieving the designed-in reliability of critical power systems, this is only one of many aspects of Operations and Maintenance that can impact reliability. Other considerations include commissioning, training, documentation, and spare parts stocking.

9-4 PREDICTIVE ANALYSIS.

Predictive analysis is based upon metrics and past documentation as a worst-case, and extrapolated using reliability factors in IEEE Std 493 (Gold Book) for a prediction of future problems. By following recommended maintenance procedures, a substantial amount of failures can be avoided.

CHAPTER 10 PHYSICAL SECURITY

10-1 PHYSICAL SECURITY.

UFC 4-010-01 and UFC 4-010-02 provide facility physical security requirements. Typically, power systems are located in locked or sealed vaults, underground junction boxes, and/or secured locations and are minimally impacted by these UFCs.

10-2 LESSONS LEARNED.

A record must be made on all switching and component failures which must list with specificity the problem, the attempted solution, and the permanent solution. This must be free of naming faults attributable to individuals in order to become a training source for the elimination of future repetitions of the same problems.

APPENDIX A REFERENCES

AMERICAN NATIONAL STANDARDS INSTITUTE (ANSI)

https://www.ansi.org/

ANSI/SIA A92.2, *Vehicle-Mounted Elevating and Rotating Aerial Devices*

ANSI/SIA A92.3, *Manually Propelled Elevating Aerial Platforms*

ANSI/SIA A92.5, *Boom Supported Elevating Work Platforms*

ANSI/SIA A92.6, *Self-Propelled Elevating Work Platforms*

ANSI Z133.1, *Arboricultural Operations -- Pruning, Repairing, Maintaining, and Removing Trees, and Cutting Brush, Safety Requirements*

ANSI Z359, *Fall Protection Code*

ANSI/NEMA WC 74/ICEA S-93-639, *5-46kV Shielded Power Cable for Use in the Transmission and Distribution of Electric Energy*

AMERICAN SOCIETY FOR TESTING AND MATERIALS INTERNATIONAL (ASTM)

https://www.astm.org/standards-and-solutions/standards-publications

ASTM F18, *Electrical Protective Equipment for Workers*

ASTM A90, *Standard Test Method for Weight [Mass] of Coating on Iron and Steel Articles with Zinc or Zinc-Alloy Coatings*

ASTM F887, *Specifications for Personal Climbing Equipment*

DEPARTMENT OF THE AIR FORCE

https://www.e-publishing.af.mil/

AFH 32-1282 V1 & V2 *Field Guide for Inspection, Evaluation, and Maintenance Criteria for Electrical Substations and Switchgear*

AFI 10-2501, *Air Force Emergency Management Program Planning and Operations*

AFI 33-210, *Air Force Certification and Accreditation (C&A) Program (AFCAP)*

AFMAN 10-2504, *Air Force Incident Management System (AFIMS) Standards and Procedures*

AFJMAN 32-1082 /TM 5-684 /MO-200 *Facilities Engineering Electrical Exterior Facilities*

DEPARTMENT OF THE ARMY

https://armypubs.army.mil/

DA PAM 385-10, *Army Safety Program*

DA PAM 385-26, *Army Electrical Safety Program*

EM 385-1-1, US Corps of Engineers, *Safety and Health Requirements Manual*

TM 5-698-3, *Reliability Primer for Command, Control, Communications, Computer, Intelligence, Surveillance, and Reconnaissance (C4ISR) Facilities*

DEPARTMENT OF DEFENSE

https://www.esd.whs.mil/Directives/issuances/dodi/

DISA Circular 350-195-2, *Electric Power Systems for Department of Defense Information Network (DODIN) Facilities*

DoD 4715.05-G, *Overseas Environmental Baseline Guidance Document*

DoD Instruction 4170.11, *Installation Energy Management*

DoD Instruction 4180.11, *DoD Energy Policy*

DoD Instruction 8500.01, *Cybersecurity*

DoD Instruction 8510.01, *Risk Management Framework (RMF) for DoD Information Technology (IT)*

DEPARTMENT OF THE NAVY

Fall Protection Guide for Ashore Facilities
https://navalsafetycommand.navy.mil/Portals/100/Documents/Fall_Protection_Guide.pdf

NAVFAC P-300, *Management of Civil Engineering Support Equipment*
https://apps.dtic.mil/sti/tr/pdf/ADA526398.pdf

IEEE

https://www.ieee.org/

IEEE/ANSI C2, *National Electrical Safety Code*

IEEE Std 18, *IEEE Standard for Shunt Power Capacitors*

IEEE Std C37.12.1, *IEEE Guide for High-Voltage (>1000 V) Circuit Breaker Instruction Manual Content*

IEEE Std C37.35, *IEEE Guide for the Application, Installation, Operation, and Maintenance of High-Voltage Air Disconnecting and Interrupter Switches*

IEEE Std C37.48, *IEEE Guide for the Application, Operation, and Maintenance of High-Voltage Fuses, Distribution Enclosed Single-Pole Air Switches, Fuse Disconnecting Switches, and Accessories*

IEEE Std C37.48.1, *IEEE Guide for the Operation, Classification, Application, and Coordination of Current-Limiting Fuses with Rated Voltages 1–38 kV*

IEEE Std C37.99, *IEEE Guide for the Protection of Shunt Capacitor Banks*

IEEE Std C37.104, *IEEE Guide for Automatic Reclosing of Line Circuit Breakers for AC Distribution and Transmission Lines*

IEEE Std C37-230, *IEEE Guide for Protective Relay Applications to Distribution Lines*

IEEE Std 57.106, *IEEE Guide for Acceptance and Maintenance of Insulation Oil in Equipment*

IEEE Std C62.22, *IEEE Guide for the Application of Metal-Oxide Surge Arresters for Alternating-Current Systems*

IEEE Std 80, *IEEE Guide for Safety in AC Substation Grounding*

IEEE Std C135.90, *IEEE Standard for Pole Line Hardware for Overhead Line Construction*

IEEE Std 141, *IEEE Recommended Practice for Electric Power Distribution for Industrial Plants*

IEEE Std 242, *IEEE Guide for Synchronization, Calibration, Testing, and Installation of Phasor Measurement Units (PMUs) for Power System Protection and Control.*

IEEE Std 399, *IEEE Recommended Practice for Industrial and Commercial Power Systems Analysis*

IEEE Std 400, *IEEE Guide for Field Testing of Laminated Dielectric, Shielded Power Cable Systems Rated 5 kV and Above with High Direct Current Voltage*

IEEE Std 446, *IEEE Recommended Practice for Emergency and Standby Power Systems for Industrial and Commercial Applications (Orange Book)*

IEEE Std 450, *IEEE Recommended Practice for Maintenance, Testing, and Replacement of Vented Lead-Acid Batteries for Stationary Applications*

IEEE Std 493, *IEEE Recommended Practice for the Design of Reliable Industrial and Commercial Power Systems (IEEE Gold Book)*

IEEE Std 510, *IEEE Recommended Practices for Safety in High-Voltage and High-Power Testing*

IEEE Std 516, *IEEE Guide for Maintenance Methods on Energized Power Lines*

IEEE Std 519, *IEEE Recommended Practice and Requirements for Harmonic Control in Electric Power Systems*

IEEE Std 524, *IEEE Guide to the Installation of Overhead Transmission Line Conductors*

IEEE Std 837, *IEEE Standard for Qualifying Permanent Connections Used in Substation Grounding*

IEEE Std 902, *IEEE Guide for Maintenance, Operation, and Safety of Industrial and Commercial Power Systems (Yellow Book)*

ANSI/IEEE Std 935, *IEEE Guide on Terminology for Tools and Equipment to be Used in Live Line Working*

IEEE Std 957, *IEEE Guide for Cleaning Insulators*

IEEE Std 978, *IEEE Guide for In-Service Maintenance and Electrical Testing of Live-Line Tools*

IEEE Std 1025, *IEEE Guide to the Assembly and Erection of Concrete Pole Structures*

IEEE Std 1048, *IEEE Guide for Protective Grounding of Power Lines*

IEEE Std 1100, *IEEE Recommended Practice for Powering and Grounding Electronic Equipment (Emerald Book)*

IEEE Std 1106, *IEEE Recommended Practice for Installation, Maintenance, Testing, and Replacement of Vented Nickel-Cadmium Batteries for Stationary Applications*

IEEE Std 1159, *IEEE Recommended Practice for Monitoring Electric Power Quality*

IEEE Std 1188, *IEEE Recommended Practice for Maintenance, Testing, and Replacement of Valve Regulated Lead-Acid Storage Batteries for Stationary Applications*

IEEE Std 1246, *IEEE Guide for Temporary Protective Grounding Systems Used in Substations*

IEEE Std 1264, *IEEE Guide for Animal Deterrents for Electric Power Supply Substations*

IEEE Std 1283, *IEEE Guide for Determining the Effects of High-Temperature Operation on Conductors, Connectors, and Accessories*

IEEE Std 1307, *IEEE Standard for Fall Protection for Utility Work*

IEEE Std 1410, *IEEE Guide for Improving the Lightning Performance of Electric Power Overhead Distribution Lines*

IEEE Std 1584, *IEEE Guide for Performing Arc-Flash Hazard Calculations,* including Amendments 1 and 2

IEEE Std 1584.1, *IEEE Guide for the Specification of Scope and Deliverable Requirements for an Arc-Flash Hazard Calculation Study in Accordance with Std 1584*

IEEE Std 1651, *IEEE Guide for Reducing Bird-Related Outages*

IEEE Std 1654, *IEEE Guide for RF Protection of Personnel Working in the Vicinity of Wireless Communications Antennas Attached to Electric Power Line Structures*

IEEE Std 3007.1, *IEEE Recommended Practice for the Operation and Management of Industrial and Commercial Power Systems*

IEEE Std 3007.2, *IEEE Recommended Practice for the Maintenance of Industrial and Commercial Power Systems*

IEEE Std 3007.3, *IEEE Recommended Practice for Electrical Safety in Industrial and Commercial Power Systems*

INTERNATIONAL ELECTRICAL TESTING ASSOCIATION

https://www.netaworld.org/

NETA ATS, *Standard for Acceptance Testing Specifications for Electrical Power Equipment and Systems*

NETA MTS, *Standard for Maintenance Test Specifications for Electrical Power Equipment and Systems*

NATIONAL FIRE PROTECTION ASSOCIATION

https://www.nfpa.org/

NFPA 70, *National Electrical Code*

NFPA 70B, *Recommended Practice for Electrical Equipment Maintenance*

NFPA 70E, *Standard for Electrical Safety in the Workplace*

NFPA 780, *Standard for the Installation of Lighting Protection Systems*

OCCUPATIONAL SAFETY AND HEALTH ADMINISTRATION (OSHA)

https://www.osha.gov/laws-regs

29 CFR 1910, *General Industry Standards*

29 CFR 1926, *Construction Standards*

40 CFR 761, *Polychlorinated Biphenyls (PCBs) Manufacturing, Processing, Distribution in Commerce, and Use Prohibitions*

UNDERWRITER'S LABORATORY

UL 681, *Installation and Classification of Burglar and Holdup Alarm Systems for alarm system installation*

UL 2050, *National Industrial Security Systems*

UNIFIED FACILITIES CRITERIA

https://www.wbdg.org/dod/ufc

UFC 1-200-01, *General Building Requirements*

UFC 3-440-01, *Facility-Scale Renewable Energy Systems*

UFC 3-501-01, *Electrical Engineering*

UFC 3-540-01, *Engine-Driven Generator Systems for Backup Power Applications*

UFC 3-550-01, *Exterior Electrical Power Distribution*

UFC 3-575-01, *Lighting and Static Electricity Protection Systems*

UFC 4-010-01, *DoD Minimum Antiterrorism Standards for Buildings*

UFC 4-010-06, *Cybersecurity of Facility Related Control Systems*

UFC 4-020-01, *DoD Security Engineering Facilities Planning Manual*

UFC 4-020-02, *DoD Security Engineering Facilities Design Manual*, currently in Draft and unavailable

UFC 4-021-02NF, *Security Engineering Electronic Security Systems*

UFC 4-020-04A, *Electronic Security Systems: Security Engineering*

UFM 3-540-07, *Operations and Maintenance (O&M) for Generators*

UFM 3-560-01, *Electrical Safety, O&M*

UNITED STATES DEPARTMENT OF AGRICULTURE (USDA)

https://www.rd.usda.gov/resources/regulations/bulletins

USDA RUS Bulletin 1724E-300, *Design Guide for Rural Substations*

UNITED STATES DEPARTMENT OF INTERIOR BUREAU OF RECLAMATION

https://www.usbr.gov/library/reclamationpubs.html

Facilities Instructions, Standards, and Techniques Volume 4-1B, *Maintenance Scheduling for Electrical Equipment*

TRI-SERVICE ELECTRICAL WORKING GROUP (TSEWG)

TSEWG TP-02, *Capacitors for Power Factor Correction*
https://www.wbdg.org/dod/supp-tech-documents/tsewg-tp-02

APPENDIX B IEEE COLOR BOOKS

The IEEE Color Books have been a key electrical engineering reference source for decades. But, the IEEE Color Books will eventually be phased out and replaced by the IEEE 3000 Standards Collection. As of July 2015, all IEEE Color Books are still listed as active standards and the IEEE 3000 Standards Collection is still under development, with 9 standards issued, 20 standards under active development, and additional standards planned, but not started.

For UFCs and UFGSs, the IEEE Color Books are still suitable as a reference. In some instances, the IEEE 3000 Standards Collection standards should also be referenced. Some care should be taken to confirm if either or both types of standards should be referenced. For example, IEEE 902-1998, *IEEE Guide for Maintenance, Operation, and Safety of Industrial and Commercial Power Systems* (Yellow Book), is still listed as an active standard, even though it has been replaced by IEEE 3007.1, IEEE 3007.2, and IEEE 3007.3.

The following tables list the status of the IEEE Color Books and the IEEE 3000 Standards Collection. This information was obtained from the IEEE website.

Table B-1 IEEE Color Books

IEEE Standard	Color	Title	Status
141-1993	Red	IEEE Recommended Practice for Electric Power Distribution for Industrial Plants	Active Standard
142-2007	Green	Recommended Practice for Grounding of Industrial and Commercial Power Systems	Active Standard
241-1990	Gray	IEEE Recommended Practice for Electric Power Systems in Commercial Buildings	Active Standard
242-2001	Buff	IEEE Recommended Practice for Protection and Coordination of Industrial and Commercial Power Systems	Active Standard
399-1997	Brown	IEEE Recommended Practice for Industrial and Commercial Power Systems Analysis	Active Standard
446-1995	Orange	IEEE Recommended Practice for Emergency and Standby Power Systems for Industrial and Commercial Applications	Active Standard

IEEE Standard	Color	Title	Status
493-2007	Gold	IEEE Recommended Practice for the Design of Reliable Industrial and Commercial Power Systems	Active Standard
551-2006	Violet	Recommended Practice for Calculating AC Short-Circuit Currents in Industrial and Commercial Power Systems	Active Standard
602-2007	White	IEEE Recommended Practice for Electric Systems in Health Care Facilities	Active Standard
739-1995	Bronze	IEEE Recommended Practice for Energy Management in Industrial and Commercial Facilities	Active Standard
902-1998	Yellow	IEEE Guide for Maintenance, Operation, and Safety of Industrial and Commercial Power Systems	Active Standard
1015-2006	Blue	Recommended Practice for Applying Low-Voltage Circuit Breakers Used in Industrial and Commercial Power Systems	Active Standard
1100-2005	Emerald	IEEE Recommended Practice for Powering and Grounding Electronic Equipment	Active Standard

Table B-2 IEEE 3000 Standards Collection

Standard	Title	Status
IEEE 3000 Standard: Fundamentals		
P3000	Recommended Practice for the Engineering of Industrial and Commercial Power Systems	Active Project
IEEE 3001 Standards: Power Systems Design		
P3001.2	Recommended Practice for Evaluating the Electrical Service Requirements of Industrial and Commercial Power Systems	Active Project
P3001.9	Recommended Practice for the Lighting of Industrial and Commercial Facilities	Active Project

Standard	Title	Status
P3001.11	Recommended Practice for Application of Controllers and Automation to Industrial and Commercial Power Systems	Active Project
IEEE 3002 Standards: Power Systems Analysis		
P3002.2	Recommended Practice for Conducting Load-Flow Studies of Industrial and Commercial Power Systems	Active Project
P3002.3	Recommended Practice for Conducting Short-Circuit Studies of Industrial and Commercial Power Systems	Active Project
P3002.7	Recommended Practice for Conducting Motor-Starting Studies in Industrial and Commercial Power Systems	Active Project
P3002.8	IEEE Draft Recommended Practice for Conducting Harmonic-Analysis Studies of Industrial and Commercial Power Systems	Active Project
IEEE 3003 Standards: Power Systems Grounding		
P3003.1	Recommended Practice for the System Grounding of Industrial and Commercial Power Systems	Active Project
3003.2-2014	IEEE Recommended Practice for Equipment Grounding and Bonding in Industrial and Commercial Power Systems	Active Standard
IEEE 3004 Standards: Protection and Coordination		
3004.1-2013	IEEE Recommended Practice for the Application of Instrument Transformers in Industrial and Commercial Power Systems	Active Standard
P3004.3	Recommended Practice for the Application of Low-Voltage Fuses in Industrial and Commercial Power Systems	Active Project
P3004.4	Recommended Practice for the Application of Medium- and High-Voltage Fuses in Industrial and Commercial Power Systems	Active Project

Standard	Title	Status
3004.5-2014	IEEE Recommended Practice for the Application of Low-Voltage Circuit Breakers in Industrial and Commercial Power Systems	Active Standard
P3004.7	Recommended Practice for the Protection of Power Cables and Busway Used in Industrial and Commercial Power Systems	Active Project
P3004.8	Recommended Practice for Motor Protection in Industrial and Commercial Power Systems	Active Project
P3004.9	Recommended Practice for the Protection of Power Transformers Used in Industrial and Commercial Power Systems	Active Project
P3004.10	Recommended Practice for Generator Protection in Industrial and Commercial Power Systems	Active Project
P3004.11	Recommended Practice for Bus and Switchgear Protection in Industrial and Commercial Power Systems	Active Project
P3004.13	Recommended Practice for Overcurrent Coordination in Industrial and Commercial Power Systems	Active Project
IEEE 3005 Standards: Energy & Standby Power Systems		
No document status provided on IEEE website.		
IEEE 3006 Standards: Power Systems Reliability		
P3006.2	Recommended Practice for Evaluating the Reliability of Existing Industrial and Commercial Power Systems	Active Project
P3006.3	Recommended Practice for Determining the Impact of Preventative Maintenance on the Reliability of Industrial and Commercial Power Systems	Active Project
3006.5-2014	IEEE Recommended Practice for the Use of Probability Methods for Conducting a Reliability Analysis of Industrial and Commercial Power Systems	Active Standard
3006.7-2013	IEEE Recommended Practice for Determining the Reliability of 7x24 Continuous Power Systems in Industrial and Commercial Facilities	Active Standard

Standard	Title	Status
P3006.8	Recommended Practice for Analyzing Reliability Data for Equipment Used in Industrial and Commercial Power Systems	Active Project
3006.9-2013	IEEE Recommended Practice for Collecting Data for Use in Reliability, Availability, and Maintainability Assessments of Industrial and Commercial Power Systems	Active Standard
IEEE 3007 Standards: Maintenance, Operations, & Safety		
3007.1-2010	IEEE Recommended Practice for the Operation and Management of Industrial and Commercial Power Systems	Active Standard
3007.2-2010	IEEE Recommended Practice for the Maintenance of Industrial and Commercial Power Systems	Active Standard
3007.3-2012	IEEE Recommended Practice for Electrical Safety in Industrial and Commercial Power Systems	Active Standard

APPENDIX C PRIMARY DISTRIBUTION SYSTEM FUSING

C-1 OVERHEAD DISTRIBUTION FUSING.

Apply the following criteria for sizing expulsion fuses for distribution cutouts:

- Determine the optimal fuse size for each location. Future system outages can include a fuse link check, with replacements as necessary;

- Select a fuse link size based on standard industry guidance. Refer to the following tables for examples of fuse sizing for various system voltages. Scale the results as needed for other system voltages. Type K and T fuses are rated for 50% overload capability. Type H and Type QA fusing is not rated for overload capability as shown in Figure C-1. Table C-10 provides one example of fuse sizing for Type H or QA fuses;

- If the fused cutouts supply more than one pad-mounted transformer in a looped configuration, base the selected fuse link size on the combined kVA rating of the transformers, and possibly downsized by one fuse size to account for typical less than full load conditions. Note that fused cutouts might not provide adequate protection for any transformer in this configuration. Each transformer must have its own internal set of fuses for adequate protection; and

- In-line fuses must be capable of carrying the entire expected load of the downstream circuit. If the circuit must be capable of carrying another circuit via a downstream cross-connect switch, the in-line fuse size must take this additional loading into account or else this cross-connect path might not be suitable for use.

Note: UFC 3-550-01 requires IEEE C37.41 rated backup current limiting fuses in series with Type K expulsion fuses on systems that are rated 1) above 15 kV or 2) 15 kV and lower that have available fault currents equal to or greater than 7,000 asymmetrical amperes. When backup current limiting fuses are installed in series with an expulsion fuse, review and follow the manufacturer's installation requirements regarding maximum expulsion fuse size that can be installed in series with a backup current limiting fuse.

Note: All fusing for single-phase transformers is based on a phase-to-neutral connection.

Table C-1 Type K or T Fuse Link Sizing for Individual Transformers – 2.4 kV

Transformer Single-Phase (kVA)	Transformer 3-Phase Rating (kVA)	Full Load Line Current	Fuse Size
15	45	10.83	15
25	75	18.04	20
37.5	112.5	27.06	30
50	150	36.08	40
75	225	54.13	60
100	300	72.17	75
167	500	120.28	125
250	750	180.42	200

Table C-2 Type K or T Fuse Link Sizing for Individual Transformers – 4.16 kV

Transformer Single-Phase (kVA)	Transformer 3-Phase Rating (kVA)	Full Load Line Current	Fuse Size
15	45	6.25	8
25	75	10.41	12
37.5	112.5	15.61	20
50	150	20.82	25
75	225	31.23	40
100	300	41.64	50
167	500	69.39	80
250	750	104.09	140
—	1000	138.79	200

Table C-3 Type K or T Fuse Link Sizing for Individual Transformers – 11 kV

Transformer Single-Phase (kVA)	Transformer 3-Phase Rating (kVA)	Full Load Line Current	Fuse Size
15	45	2.36	3
25	75	3.94	6
37.5	112.5	5.90	8
50	150	7.87	10
75	225	11.81	15
100	300	15.75	18
167	500	26.24	30
250	750	39.36	50
—	1000	52.49	65
—	1500	78.73	100
—	2000	104.97	125

Table C-4 Type K or T Fuse Link Sizing for Individual Transformers – 11.5 kV

Transformer Single-Phase (kVA)	Transformer 3-Phase Rating (kVA)	Full Load Line Current	Fuse Size
15	45	2.26	3
25	75	3.77	6
37.5	112.5	5.65	8
50	150	7.53	10
75	225	11.30	15
100	300	15.06	18
167	500	25.10	30
250	750	37.65	50
—	1000	50.20	65
—	1500	75.31	100
—	2000	100.41	125

Table C-5 Type K or T Fuse Link Sizing for Individual Transformers – 12.47 kV

Transformer Single-Phase (kVA)	Transformer 3-Phase Rating (kVA)	Full Load Line Current	Fuse Size
15	45	2.08	3
25	75	3.47	6
37.5	112.5	5.21	6
50	150	6.94	8
75	225	10.42	12
100	300	13.89	15
167	500	23.15	30
250	750	34.72	40
—	1000	46.30	50
—	1500	69.45	80
—	2000	92.60	100

Table C-6 Type K or T Fuse Link Sizing for Individual Transformers – 13.2 kV

Transformer Single-Phase (kVA)	Transformer 3-Phase Rating (kVA)	Full Load Line Current	Fuse Size
15	45	1.97	3
25	75	3.28	6
37.5	112.5	4.92	6
50	150	6.56	8
75	225	9.84	12
100	300	13.12	15
167	500	21.87	30
250	750	32.80	40
—	1000	43.74	50
—	1500	65.61	80
—	2000	87.48	100

Table C-7 Type K or T Fuse Link Sizing for Individual Transformers – 13.8 kV

Transformer Single-Phase (kVA)	Transformer 3-Phase Rating (kVA)	Full Load Line Current	Fuse Size
15	45	1.88	3
25	75	3.14	6
37.5	112.5	4.71	6
50	150	6.28	8
75	225	9.41	12
100	300	12.55	15
167	500	20.92	25
250	750	31.38	40
—	1000	41.84	50
—	1500	62.76	80
—	2000	83.67	100

Table C-8 Type K or T Fuse Link Sizing for Individual Transformers – 22 kV

Transformer Single-Phase (kVA)	Transformer 3-Phase Rating (kVA)	Full Load Line Current	Fuse Size
15	45	1.18	3
25	75	1.97	3
37.5	112.5	2.95	6
50	150	3.94	6
75	225	5.90	8
100	300	7.87	12
167	500	13.12	20
250	750	19.68	30
—	1000	26.24	40
—	1500	39.36	65
—	2000	52.49	80

Table C-9 Fuse Link Sizing for Individual Transformers – 34.5 kV

Transformer Single-Phase (kVA)	Transformer 3-Phase Rating (kVA)	Full Load Line Current	Fuse Size
15	45	0.75	3
25	75	1.26	3
37.5	112.5	1.88	3
50	150	2.51	6
75	225	3.77	8
100	300	5.02	8
167	500	8.37	12
250	750	12.55	20
—	1000	16.73	25
—	1500	25.10	40
—	2000	33.47	50

Note: Ensure selected fuse is rated for the applied voltage. Some fuse types can only be used on solidly grounded 34.5 kV distribution systems. Fuse sizes vary among manufacturers; select the closest available larger fuse size if the specified fuse size is not available. Refer to UFC 3-550-01 for additional requirements for fusing.

Table C-10 Type H or QA Fuse Link Sizing for Individual Transformers – 12.47 kV

Transformer Single-Phase (kVA)	Transformer 3-Phase Rating (kVA)	Full Load Line Current	Fuse Size
15	45	2.08	5
25	75	3.47	10
37.5	112.5	5.21	15
50	150	6.94	20
75	225	10.42	25
100	300	13.89	30
167	500	23.15	50
250	750	34.72	75
—	1000	46.30	100
—	1500	69.45	150
—	2000	92.60	200

Figure C-1 Various Fuse Link Type Time-Current Response

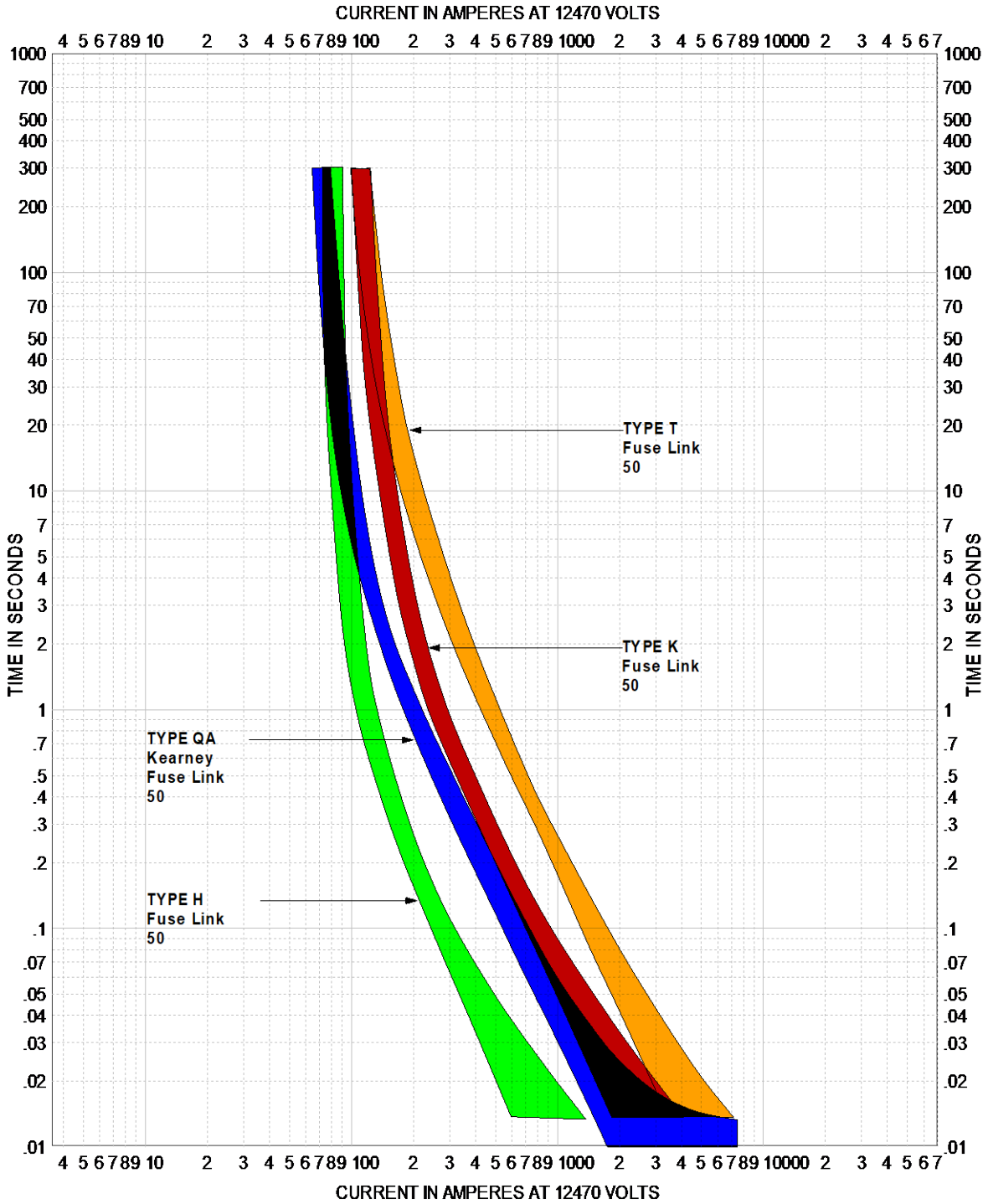

C-2 PAD-MOUNTED SWITCHGEAR FUSING.

Apply the following general criteria for fuse sizing for air-insulated pad-mounted switchgear:

- Provide adequate protection throughout the system, taking into account the unique system design features downstream of each switchgear compartment; and
- Select fuses that are as small as possible, while considering the constraints of downstream circuit full-load and inrush capability. The goal is to encourage the fuses to clear for a downstream fault, if possible, rather than just have the main feeder relaying respond to the fault.

Based on the above, apply the following specific criteria to fusing evaluations:

- If only one transformer is supplied and it does not have internal fuses:
  - Select a fuse size that provides primary transformer protection. The following tables provide examples of fuse sizing for this application and scale as needed for different system voltages. These tables are based on S&C Type SMU-20 or Type SM standard “E” speed fusing, which is the most common fusing used in pad-mounted switchgear. The Eaton Type DBU or Cooper CMU fusing is equivalent to the SMU-20 in terms of time-current response.
- If only one transformer is supplied and it does have internal fuses:
  - Select a fuse size that is at least one size larger than the internal fuses that provide transformer protection.
- If multiple transformers are supplied from a single fused compartment:
  - Ensure selected fuse size can carry the full-load current of downstream transformers;
  - Ensure selected fuse size can withstand the inrush current of simultaneously energizing the downstream transformers;
  - Provide conductor protection; and
  - Coordinate as well as possible with upstream phase and neutral relay settings.

Note: All fusing for single-phase transformers is based on a phase-to-neutral connection.

Table C-11 Fuse Sizing for Individual Transformer Primary Protection – 2.4 kV

Transformer Single-Phase (kVA)	Transformer 3-Phase Rating (kVA)	Full Load Line Current	Fuse Size
15	45	10.83	15E
25	75	18.04	20E
37.5	112.5	27.06	30E
50	150	36.08	40E
75	225	54.13	60E
100	300	72.17	75E
167	500	120.28	125E
250	750	180.42	200E
—	1000	240.56	250E
—	1500	360.84	400E
—	2000	481.13	---

Table C-12 Fuse Sizing for Individual Transformer Primary Protection – 4.16 kV

Transformer Single-Phase (kVA)	Transformer 3-Phase Rating (kVA)	Full Load Line Current	Fuse Size
15	45	6.25	10E
25	75	10.41	15E
37.5	112.5	15.61	20E
50	150	20.82	25E
75	225	31.23	40E
100	300	41.64	50E
167	500	69.39	80E
250	750	104.09	125E
—	1000	138.79	200E
—	1500	208.18	250E
—	2000	277.57	---

Table C-13 Fuse Sizing for Individual Transformer Primary Protection – 11 kV

Transformer Single-Phase (kVA)	Transformer 3-Phase Rating (kVA)	Full Load Line Current	Fuse Size
15	45	2.36	3E
25	75	3.94	7E
37.5	112.5	5.90	10E
50	150	7.87	10E
75	225	11.81	15E
100	300	15.75	20E
167	500	26.24	30E
250	750	39.36	50E
—	1000	52.49	65E
—	1500	78.73	100E
—	2000	104.97	125E

Table C-14 Fuse Sizing for Individual Transformer Primary Protection – 11.5 kV

Transformer Single-Phase (kVA)	Transformer 3-Phase Rating (kVA)	Full Load Line Current	Fuse Size
15	45	2.26	3E
25	75	3.77	5E
37.5	112.5	5.65	7E
50	150	7.53	10E
75	225	11.30	15E
100	300	15.06	20E
167	500	25.10	30E
250	750	37.65	50E
—	1000	50.20	65E
—	1500	75.31	100E
—	2000	100.41	125E

Table C-15 Fuse Sizing for Individual Transformer Primary Protection – 12.47 kV

Transformer Single-Phase (kVA)	Transformer 3-Phase Rating (kVA)	Full Load Line Current	Fuse Size
15	45	2.08	3E
25	75	3.47	5E
37.5	112.5	5.21	7E
50	150	6.94	10E
75	225	10.42	15E
100	300	13.89	20E
167	500	23.15	30E
250	750	34.72	50E
—	1000	46.30	65E
—	1500	69.45	100E
—	2000	92.60	125E

Table C-16 Fuse Sizing for Individual Transformer Primary Protection – 13.2 kV

Transformer Single-Phase (kVA)	Transformer 3-Phase Rating (kVA)	Full Load Line Current	Fuse Size
15	45	1.97	3E
25	75	3.28	5E
37.5	112.5	4.92	7E
50	150	6.56	10E
75	225	9.84	13E
100	300	13.12	15E
167	500	21.87	25E
250	750	32.80	40E
—	1000	43.74	50E
—	1500	65.61	80E
—	2000	87.48	100E

Table C-17 Fuse Sizing for Individual Transformer Primary Protection – 13.8 kV

Transformer Single-Phase (kVA)	Transformer 3-Phase Rating (kVA)	Full Load Line Current	Fuse Size
15	45	1.88	3E
25	75	3.14	5E
37.5	112.5	4.71	7E
50	150	6.28	10E
75	225	9.41	15E
100	300	12.55	20E
167	500	20.92	25E
250	750	31.38	40E
—	1000	41.84	50E
—	1500	62.76	80E
—	2000	83.67	100E

Table C-18 Fuse Sizing for Individual Transformer Primary Protection – 22 kV

Transformer Single-Phase (kVA)	Transformer 3-Phase Rating (kVA)	Full Load Line Current	Fuse Size
15	45	1.18	3E
25	75	1.97	3E
37.5	112.5	2.95	7E
50	150	3.94	7E
75	225	5.90	10E
100	300	7.87	12E
167	500	13.12	20E
250	750	19.68	30E
—	1000	26.24	40E
—	1500	39.36	65E
—	2000	52.49	80E

Table C-19 Fuse Sizing for Individual Transformer Primary Protection – 34.5 kV

Transformer Single-Phase (kVA)	Transformer 3-Phase Rating (kVA)	Full Load Line Current	Fuse Size
15	45	0.75	3E
25	75	1.26	3E
37.5	112.5	1.88	3E
50	150	2.51	7E
75	225	3.77	7E
100	300	5.02	10E
167	500	8.37	12E
250	750	12.55	20E
—	1000	16.73	25E
—	1500	25.10	40E
—	2000	33.47	50E

APPENDIX D VACUUM FAULT INTERRUPTER (VFI) TRIP SETTINGS

D-1 GENERAL CRITERIA.

Apply the following general criteria for VFI trip settings in pad-mounted switchgear:

- Provide adequate protection throughout the system, taking into account the unique system design features downstream of each switchgear compartment.
- Do not leave VFI settings at the factory default values. Select VFI settings that are as small as possible, while considering the constraints of downstream circuit full-load and inrush capability. The goal is to encourage the VFIs to clear for a downstream fault, if possible, rather than have the main feeder relaying respond to the fault.

Based on the above, apply the following specific criteria for determining VFI settings:

- If only one transformer is supplied and it does not have internal fuses:
  - Select a trip setting that provides transformer protection. Refer to tables in the following sections for VFI settings and scale as needed for different system voltages. Note that each manufacturer's overcurrent trip unit is equipped with minimum settings that have to be considered. For higher operating voltages, smaller rated transformers cannot be properly protected by the minimum available VFI trip settings.
  - Note that very few transformers fall into this category. Most distribution transformers will have internal fusing.
- If only one transformer is supplied and it does have internal fuses:
  - Select a trip setting that is approximately one size larger than the internal fuses that typically provide transformer protection.
  - The purpose of this selection is to possibly allow the transformer fusing to respond to an internal fault. But, more importantly, this lateral will be removed from service as soon as possible to minimize any effect on the main feeder.
- If multiple transformers are supplied from a single compartment:
  - Ensure selected trip settings can carry the full-load current of the downstream transformers.

- Ensure selected trip settings can withstand the inrush current of simultaneously energizing the downstream transformers.
- Provide conductor protection.
- Coordinate as well as possible with upstream phase and neutral relaying.
- Allow for cross-ties if the downstream loads allow cross-connect to another feeder.
- A table is not provided for this case. Each configuration requires a specific review. For relatively small laterals with limited load, the settings will tend to be set low so that the lateral will be removed from service as soon as possible to minimize any effect on the main feeder.

- If the VFI serves as a higher ampacity cross-tie point between feeders:
  - Do not use the tables in the following sections. Perform a specific evaluation.
  - If the manufacturer's overcurrent trip unit has the capability, select a 51 relay curve, including ground trip, and coordinate the cross-tie location with the upstream feeder.

D-2 S&C VISTA PAD-MOUNTED SWITCHGEAR.

The following tables provide recommended settings for S&C Vista switchgear based on providing primary protection to an individual transformer. Refer to Section D-1 for guidance when a VFI supplies more than one downstream transformer.

Figure D-1 S&C Vista Switchgear

Notes for S&C Vista Tables:

1. *The S&C Vista switchgear typically have CT ratios of 660:1, which should be confirmed. Minimum trip setting is 25 amperes.*

2. *Available E-speed settings are 25E, 30E, 40E, 50E, 65E, 80E, 100E, 125E, 150E, 175E, 200E, 250E, 300E, and 400E.*

3. *The factory-shipped default settings are 200E.*

Table D-1 S&C VFI Settings to Provide Primary Protection for Individual Transformers – 2.4 kV

Transformer 1-Phase Rating (kVA)	Transformer 3-Phase Rating (kVA)	3-Phase Full Load Line Current	E-Speed Setting (amperes)
15	45	10.83	25
25	75	18.04	25
37.5	112.5	27.06	30
50	150	36.08	40
75	225	54.13	65
100	300	72.17	80
167	500	120.28	125
---	750	180.42	200
---	1000	240.56	250
---	1500	360.84	400
---	2000	481.13	400

Table D-2 S&C VFI Settings to Provide Primary Protection for Individual Transformers – 4.16 kV

Transformer 1-Phase Rating (kVA)	Transformer 3-Phase Rating (kVA)	3-Phase Full Load Line Current	E-Speed Setting (amperes)
15	45	6.25	25
25	75	10.41	25
37.5	112.5	15.61	25
50	150	20.82	25
75	225	31.23	40
100	300	41.64	50
167	500	69.39	80
---	750	104.09	125
---	1000	138.79	175
---	1500	208.18	250
---	2000	277.57	300

Table D-3 S&C VFI Settings to Provide Primary Protection for Individual Transformers – 11 kV

Transformer 1-Phase Rating (kVA)	Transformer 3-Phase Rating (kVA)	3-Phase Full Load Line Current	E-Speed Setting (amperes)
15	45	2.36	25
25	75	3.94	25
37.5	112.5	5.90	25
50	150	7.87	25
75	225	11.81	25
100	300	15.75	25
167	500	26.24	40
---	750	39.36	50
---	1000	52.49	65
---	1500	78.73	100
---	2000	104.97	125

Table D-4 S&C VFI Settings to Provide Primary Protection for Individual Transformers – 11.5 kV

Transformer 1-Phase Rating (kVA)	Transformer 3-Phase Rating (kVA)	3-Phase Full Load Line Current	E-Speed Setting (amperes)
15	45	2.26	25
25	75	3.77	25
37.5	112.5	5.65	25
50	150	7.53	25
75	225	11.30	25
100	300	15.06	25
167	500	25.10	40
---	750	37.65	50
---	1000	50.20	65
---	1500	75.31	100
---	2000	100.41	125

Table D-5 S&C VFI Settings to Provide Primary Protection for Individual Transformers – 12.47 kV

Transformer 1-Phase Rating (kVA)	Transformer 3-Phase Rating (kVA)	3-Phase Full Load Line Current	E-Speed Setting (amperes)
15	45	2.08	25
25	75	3.47	25
37.5	112.5	5.21	25
50	150	6.94	25
75	225	10.42	25
100	300	13.89	25
167	500	23.15	30
---	750	34.72	50
---	1000	46.30	65
---	1500	69.45	100
---	2000	92.60	125

Table D-6 S&C VFI Settings to Provide Primary Protection for Individual Transformers – 13.2 kV

Transformer 1-Phase Rating (kVA)	Transformer 3-Phase Rating (kVA)	3-Phase Full Load Line Current	E-Speed Setting (amperes)
15	45	1.97	25
25	75	3.28	25
37.5	112.5	4.92	25
50	150	6.56	25
75	225	9.84	25
100	300	13.12	25
167	500	21.87	30
---	750	32.80	50
---	1000	43.74	65
---	1500	65.61	100
---	2000	87.48	125

Table D-7 S&C VFI Settings to Provide Primary Protection for Individual Transformers – 13.8 kV

Transformer 1-Phase Rating (kVA)	Transformer 3-Phase Rating (kVA)	3-Phase Full Load Line Current	E-Speed Setting (amperes)
15	45	1.88	25
25	75	3.14	25
37.5	112.5	4.71	25
50	150	6.28	25
75	225	9.41	25
100	300	12.55	25
167	500	20.92	30
---	750	31.38	50
---	1000	41.84	65
---	1500	62.76	100
---	2000	83.67	125

Table D-8 S&C VFI Settings to Provide Primary Protection for Individual Transformers – 22 kV

Transformer 1-Phase Rating (kVA)	Transformer 3-Phase Rating (kVA)	3-Phase Full Load Line Current	E-Speed Setting (amperes)
15	45	1.18	25
25	75	1.97	25
37.5	112.5	2.95	25
50	150	3.94	25
75	225	5.90	25
100	300	7.87	25
167	500	13.12	25
---	750	19.68	30
---	1000	26.24	40
---	1500	39.36	65
---	2000	52.49	80

Table D-9 S&C VFI Settings to Provide Primary Protection for Individual Transformers – 34.5 kV

Transformer 1-Phase Rating (kVA)	Transformer 3-Phase Rating (kVA)	3-Phase Full Load Line Current	E-Speed Setting (amperes)
15	45	0.75	25
25	75	1.26	25
37.5	112.5	1.88	25
50	150	2.51	25
75	225	3.77	25
100	300	5.02	25
167	500	8.37	25
---	750	12.55	25
---	1000	16.73	25
---	1500	25.10	30
---	2000	33.47	40

Note: All settings for single-phase transformers are based on a phase-to-neutral connection.

D-3 G&W VFI PAD-MOUNTED SWITCHGEAR.

The following tables provide recommended settings for G&W switchgear based on providing primary protection to an individual transformer. Refer to Section D-1 for guidance when a VFI supplies more than one downstream transformer.

Figure D-2 G&W VFI Switchgear

The available settings vary with the trip unit and typically have the following available settings:

- Pickup Range 15-300E: 15, 20, 25, 35, 45, 60, 75, 100, 125, 175, 225, and 300.
- Pickup Range 30-600E: 30, 40, 50, 70, 90, 120, 150, 200, 250, 350, 450, and 600.

Note: Minimum setting is either 15 or 30 amperes, and varies with the style. Select nearest available setting is trip unit configuration does not include the above settings.

Newer G&W switchgear might be equipped with electronic trip units with a variety of setting options.

Table D-10 G&W VFI Settings to Provide Primary Protection for Individual Transformers – 2.4 kV

Transformer 1-Phase Rating (kVA)	Transformer 3-Phase Rating (kVA)	3-Phase Full Load Line Current	E-Speed Setting (amperes)
15	45	10.83	20
25	75	18.04	35
37.5	112.5	27.06	45
50	150	36.08	60
75	225	54.13	100
100	300	72.17	125
167	500	120.28	225
---	750	180.42	300
---	1000	240.56	450
---	1500	360.84	450
---	2000	481.13	600

Table D-11 G&W VFI Settings to Provide Primary Protection for Individual Transformers – 4.16 kV

Transformer 1-Phase Rating (kVA)	Transformer 3-Phase Rating (kVA)	3-Phase Full Load Line Current	E-Speed Setting (amperes)
15	45	6.25	15
25	75	10.41	20
37.5	112.5	15.61	25
50	150	20.82	35
75	225	31.23	60
100	300	41.64	75
167	500	69.39	125
---	750	104.09	175
---	1000	138.79	225
---	1500	208.18	350
---	2000	277.57	450

Table D-12 G&W VFI Settings to Provide Primary Protection for Individual Transformers – 11 kV

Transformer 1-Phase Rating (kVA)	Transformer 3-Phase Rating (kVA)	3-Phase Full Load Line Current	E-Speed Setting (amperes)
15	45	2.36	15
25	75	3.94	15
37.5	112.5	5.90	15
50	150	7.87	20
75	225	11.81	25
100	300	15.75	35
167	500	26.24	60
---	750	39.36	75
---	1000	52.49	100
---	1500	78.73	175
---	2000	104.97	225

Table D-13 G&W VFI Settings to Provide Primary Protection for Individual Transformers – 11.5 kV

Transformer 1-Phase Rating (kVA)	Transformer 3-Phase Rating (kVA)	3-Phase Full Load Line Current	E-Speed Setting (amperes)
15	45	2.26	15
25	75	3.77	15
37.5	112.5	5.65	15
50	150	7.53	20
75	225	11.30	25
100	300	15.06	35
167	500	25.10	60
---	750	37.65	75
---	1000	50.20	100
---	1500	75.31	175
---	2000	100.41	225

Table D-14 G&W VFI Settings to Provide Primary Protection for Individual Transformers – 12.47 kV

Transformer 1-Phase Rating (kVA)	Transformer 3-Phase Rating (kVA)	3-Phase Full Load Line Current	E-Speed Setting (amperes)
15	45	2.08	15
25	75	3.47	15
37.5	112.5	5.21	15
50	150	6.94	20
75	225	10.42	25
100	300	13.89	35
167	500	23.15	60
---	750	34.72	100
---	1000	46.30	125
---	1500	69.45	175
---	2000	92.60	225

Table D-15 G&W VFI Settings to Provide Primary Protection for Individual Transformers – 13.2 kV

Transformer 1-Phase Rating (kVA)	Transformer 3-Phase Rating (kVA)	3-Phase Full Load Line Current	E-Speed Setting (amperes)
15	45	1.97	15
25	75	3.28	15
37.5	112.5	4.92	15
50	150	6.56	20
75	225	9.84	25
100	300	13.12	35
167	500	21.87	60
---	750	32.80	100
---	1000	43.74	125
---	1500	65.61	175
---	2000	87.48	225

Table D-16 G&W VFI Settings to Provide Primary Protection for Individual Transformers – 13.8 kV

Transformer 1-Phase Rating (kVA)	Transformer 3-Phase Rating (kVA)	3-Phase Full Load Line Current	E-Speed Setting (amperes)
15	45	1.88	15
25	75	3.14	15
37.5	112.5	4.71	15
50	150	6.28	20
75	225	9.41	25
100	300	12.55	35
167	500	20.92	60
---	750	31.38	100
---	1000	41.84	125
---	1500	62.76	175
---	2000	83.67	225

Table D-17 G&W VFI Settings to Provide Primary Protection for Individual Transformers – 22 kV

Transformer 1-Phase Rating (kVA)	Transformer 3-Phase Rating (kVA)	3-Phase Full Load Line Current	E-Speed Setting (amperes)
15	45	1.18	15
25	75	1.97	15
37.5	112.5	2.95	15
50	150	3.94	15
75	225	5.90	15
100	300	7.87	15
167	500	13.12	25
---	750	19.68	45
---	1000	26.24	60
---	1500	39.36	75
---	2000	52.49	100

Table D-18 G&W VFI Settings to Provide Primary Protection for Individual Transformers – 34.5 kV

Transformer 1-Phase Rating (kVA)	Transformer 3-Phase Rating (kVA)	3-Phase Full Load Line Current	E-Speed Setting (amperes)
15	45	0.75	15
25	75	1.26	15
37.5	112.5	1.88	15
50	150	2.51	15
75	225	3.77	15
100	300	5.02	15
167	500	8.37	15
---	750	12.55	20
---	1000	16.73	35
---	1500	25.10	45
---	2000	33.47	60

Note: All settings for single-phase transformers are based on a phase-to-neutral connection.

D-4 COOPER VFI PAD-MOUNTED SWITCHGEAR.

D-4.1 Overview.

Figure D-3 shows a typical Cooper VFI switchgear.

Figure D-3 Cooper VFI Switchgear

The VFI trip units are referred to as Tri-Phase trip units. Different types of Tri-Phase trip units can be used, including:

- Tri-Phase – provides time overcurrent and instantaneous trip capability. Tripping can be selected for either a three-phase trip or a single-phase trip.

- Tri-Phase with Ground Trip (TPG) – provides Tri-Phase capability as well as ground fault tripping. This includes ground fault time overcurrent and instantaneous trip capability.

- Tri-Phase with minimum response accessory – improves coordination capability by allowing a minimum time delay before a time overcurrent response is activated. An instantaneous trip, if specified, can still occur without any deliberate time delay.

- SCADA Accessory Board for Tri-Phase Units – allows for inrush restraint and emergency overcurrent trip settings.

D-4.2 Trip Unit Characteristics.

The following provides additional information regarding the overcurrent trip response of these trip units:

- The EF time-current curve is an extremely inverse response curve. From the time of initial overcurrent detection (response), the total clearing time

is typically less than 3 cycles. Both the initial response and the final clearing time is important.

- The minimum trip (pickup) settings are set by a series of dip switches. The default minimum phase trip is 20 amperes and the default minimum ground trip is 10 amperes. The actual pickup point will be the sum of the dip switches set to ON plus this default minimum value. The settings recommended in this document often use the minimum available values of 20 amperes for phase trips and 10 amperes for the ground trip. These minimum values are achieved by setting all phase or ground dip switches to the OFF direction. Refer to the Cooper instruction manual for additional information.

- The instantaneous trip settings are adjustable from 1X to 15X, where 'X' refers to the specified pickup point described above. Setting the OFF-ON switch to ON accomplishes an instantaneous trip setting of 1X and additional dip switches are set to achieve the desired setting. The instantaneous trip includes a fixed time delay of 25 milliseconds. For high fault current levels, this 25 millisecond time delay will be ignored because the EF time-current curve response shown on Figure 8 will still process an instantaneous trip.

- The EFR style of trip unit includes a minimum response time, which effectively forces a pre-set time delay beyond which time the VFI can trip. This minimum response time is adjustable from 0.050 to 0.580 seconds. If the minimum response time dip switch is set to STD, there is no minimum response time and the time-current response will follow the EF curve. This style of trip unit was installed on the first five switches of the Suwannee Feeder.

- If the ground trip block switch is turned to ON, ground tripping will be disabled if it has been provided. The phase trip settings will still be active.

- A selector switch enables either single-phase or three-phase tripping. If set on single-phase tripping, only the affected phase will trip. This selection might be used in areas using predominantly single-phase loads, such as housing areas.

- The factory-shipped default settings are:

  - Phase pickup – 80 amperes.

  - Ground pickup – 40 amperes.

  - Ground trip block – off.

  - Trip type – 3-phase.

- Emergency minimum trip multiplier – off.
- Inrush restraint minimum trip multiples – off.
- Minimum trip multiplier switch – off.

D-4.3 Example Trip Settings.

Notes:

1. *Minimum phase trip setting is 20 amperes. Minimum neutral trip setting is 10 amperes. These minimum settings provide minimal protection for the smallest distribution transformers.*

2. *Pickup settings can only be increased in increments of 10.*

3. *Instantaneous trip settings are only available in odd numbers, ranging from 1X to 15X, where X is the specified pickup setting. For example, if the pickup is specified at 20 amperes, an instantaneous trip value of 5X is 100 amperes (5 x 20 = 100).*

4. *For solely single phase installations, increase ground trip pickup as needed to ensure adequate margin for normal neutral current flow.*

Figure D-4 shows the factory default phase and ground trips:

- The phase trips have dip switches on for 20A and 40A. The phase trip factory default setting is 20 (min) + 20 + 40 = 80 amperes.
- The ground trip has its dip switches on for 10A and 20A. The ground trip factory default setting is 10 (min) + 10 + 20 = 40 amperes.
- All dip switches are off for the instantaneous trips. The instantaneous trips are OFF.

Figure D-4 Factory Default Settings

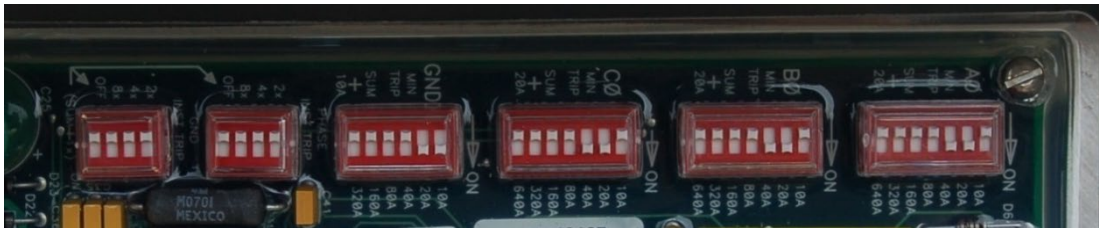

Figure D-5 shows another example trip unit:

- The phase trips have dip switches on for 320A, 80A, 40A, and 10A. The phase trip setting is 20 (min) + 320 + 80 +40 + 10 = 470 amperes.
- The ground trip has its dip switches on for 160A and 10A. The ground trip setting is 10 (min) + 10 + 160 = 180 amperes.
- All dip switches are off for the instantaneous trips. The instantaneous trips are OFF.

Figure D-5 Example Tri-Phase Trip Settings – Higher Trip Values

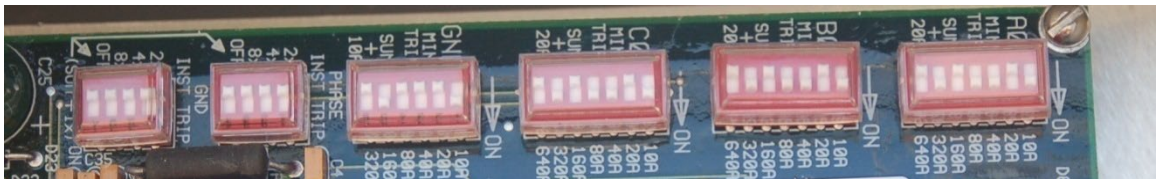

D-4.4 Recommended Settings.

The following tables provide recommended settings for Cooper VFI switchgear based on providing primary protection to an individual transformer. Refer to Section D-1 for guidance when a VFI supplies more than one downstream transformer.

Table D-19 Cooper VFI Settings to Provide Primary Protection for Individual Transformers – 2.4 kV

Transformer 1-Phase Rating (kVA)	Transformer 3-Phase Rating (kVA)	3-Phase Full Load Line Current	Phase Pickup Setting (amperes)	Ground Pickup Setting (amperes)	Phase Inst Trip Setting (value)	Ground Inst Trip Setting (value)
15	45	10.83	20	10	3X	3X
25	75	18.04	30	10	5X	5X
37.5	112.5	27.06	50	20	5X	5X
50	150	36.08	60	30	7X	7X
75	225	54.13	100	40	9X	7X
100	300	72.17	130	50	9X	11X
167	500	120.28	220	60	9X	11X
---	750	180.42	300	80	9X	11X
---	1000	240.56	440	100	9X	11X
---	1500	360.84	600	120	9X	9X
---	2000	481.13	600	150	9X	9X

Table D-20 Cooper VFI Settings to Provide Primary Protection for Individual Transformers – 4.16 kV

Transformer 1-Phase Rating (kVA)	Transformer 3-Phase Rating (kVA)	3-Phase Full Load Line Current	Phase Pickup Setting (amperes)	Ground Pickup Setting (amperes)	Phase Inst Trip Setting (value)	Ground Inst Trip Setting (value)
15	45	6.25	20	10	3X	3X
25	75	10.41	20	10	5X	5X
37.5	112.5	15.61	30	20	5X	5X
50	150	20.82	40	20	7X	7X
75	225	31.23	60	30	9X	7X
100	300	41.64	80	40	9X	11X
167	500	69.39	130	60	9X	11X
---	750	104.09	180	80	9X	11X
---	1000	138.79	230	100	9X	11X
---	1500	208.18	350	100	9X	9X
---	2000	277.57	450	100	9X	9X

Table D-21 Cooper VFI Settings to Provide Primary Protection for Individual Transformers – 11 kV

Transformer 1-Phase Rating (kVA)	Transformer 3-Phase Rating (kVA)	3-Phase Full Load Line Current	Phase Pickup Setting (amperes)	Ground Pickup Setting (amperes)	Phase Inst Trip Setting (value)	Ground Inst Trip Setting (value)
15	45	2.36	20	10	3X	3X
25	75	3.94	20	10	5X	5X
37.5	112.5	5.90	20	10	5X	5X
50	150	7.87	20	10	7X	7X
75	225	11.81	30	20	9X	7X
100	300	15.75	30	20	9X	11X
167	500	26.24	50	30	9X	11X
---	750	39.36	80	40	9X	11X
---	1000	52.49	100	60	9X	11X
---	1500	78.73	150	80	9X	9X
---	2000	104.97	200	100	9X	9X

Table D-22 Cooper VFI Settings to Provide Primary Protection for Individual Transformers – 11.5 kV

Transformer 1-Phase Rating (kVA)	Transformer 3-Phase Rating (kVA)	3-Phase Full Load Line Current	Phase Pickup Setting (amperes)	Ground Pickup Setting (amperes)	Phase Inst Trip Setting (value)	Ground Inst Trip Setting (value)
15	45	2.26	20	10	3X	3X
25	75	3.77	20	10	5X	5X
37.5	112.5	5.65	20	10	5X	5X
50	150	7.53	20	10	7X	7X
75	225	11.30	30	20	9X	7X
100	300	15.06	30	20	9X	11X
167	500	25.10	50	30	9X	11X
---	750	37.65	80	40	9X	11X
---	1000	50.20	100	60	9X	11X
---	1500	75.31	150	80	9X	9X
---	2000	100.41	200	100	9X	9X

Table D-23 Cooper VFI Settings to Provide Primary Protection for Individual Transformers – 12.47 kV

Transformer 1-Phase Rating (kVA)	Transformer 3-Phase Rating (kVA)	3-Phase Full Load Line Current	Phase Pickup Setting (amperes)	Ground Pickup Setting (amperes)	Phase Inst Trip Setting (value)	Ground Inst Trip Setting (value)
15	45	2.08	20	10	3X	3X
25	75	3.47	20	10	5X	5X
37.5	112.5	5.21	20	10	5X	5X
50	150	6.94	20	10	7X	7X
75	225	10.42	20	20	9X	7X
100	300	13.89	30	20	9X	11X
167	500	23.15	50	30	9X	11X
---	750	34.72	80	40	9X	11X
---	1000	46.30	100	60	9X	11X
---	1500	69.45	150	80	9X	9X
---	2000	92.60	200	100	9X	9X

Table D-24 Cooper VFI Settings to Provide Primary Protection for Individual Transformers – 13.2 kV

Transformer 1-Phase Rating (kVA)	Transformer 3-Phase Rating (kVA)	3-Phase Full Load Line Current	Phase Pickup Setting (amperes)	Ground Pickup Setting (amperes)	Phase Inst Trip Setting (value)	Ground Inst Trip Setting (value)
15	45	1.97	20	10	3X	3X
25	75	3.28	20	10	5X	5X
37.5	112.5	4.92	20	10	5X	5X
50	150	6.56	20	10	7X	7X
75	225	9.84	20	20	9X	7X
100	300	13.12	30	20	9X	11X
167	500	21.87	50	30	9X	11X
---	750	32.80	80	40	9X	11X
---	1000	43.74	100	60	9X	11X
---	1500	65.61	150	80	9X	9X
---	2000	87.48	200	100	9X	9X

Table D-25 Cooper VFI Settings to Provide Primary Protection for Individual Transformers – 13.8 kV

Transformer 1-Phase Rating (kVA)	Transformer 3-Phase Rating (kVA)	3-Phase Full Load Line Current	Phase Pickup Setting (amperes)	Ground Pickup Setting (amperes)	Phase Inst Trip Setting (value)	Ground Inst Trip Setting (value)
15	45	1.88	20	10	3X	3X
25	75	3.14	20	10	5X	5X
37.5	112.5	4.71	20	10	5X	5X
50	150	6.28	20	10	7X	7X
75	225	9.41	20	20	9X	7X
100	300	12.55	30	20	9X	11X
167	500	20.92	50	30	9X	11X
---	750	31.38	80	40	9X	11X
---	1000	41.84	100	60	9X	11X
---	1500	62.76	150	80	9X	9X
---	2000	83.67	200	100	9X	9X

Table D-26 Cooper VFI Settings to Provide Primary Protection for Individual Transformers – 22 kV

Transformer 1-Phase Rating (kVA)	Transformer 3-Phase Rating (kVA)	3-Phase Full Load Line Current	Phase Pickup Setting (amperes)	Ground Pickup Setting (amperes)	Phase Inst Trip Setting (value)	Ground Inst Trip Setting (value)
15	45	1.18	20	10	3X	3X
25	75	1.97	20	10	3X	3X
37.5	112.5	2.95	20	10	5X	5X
50	150	3.94	20	10	5X	5X
75	225	5.90	20	20	9X	7X
100	300	7.87	20	20	9X	7X
167	500	13.12	30	20	9X	7X
---	750	19.68	40	20	9X	9X
---	1000	26.24	50	30	9X	9X
---	1500	39.36	80	40	9X	9X
---	2000	52.49	110	50	9X	9X

Table D-27 Cooper VFI Settings to Provide Primary Protection for Individual Transformers – 34.5 kV

Transformer 1-Phase Rating (kVA)	Transformer 3-Phase Rating (kVA)	3-Phase Full Load Line Current	Phase Pickup Setting (amperes)	Ground Pickup Setting (amperes)	Phase Inst Trip Setting (value)	Ground Inst Trip Setting (value)
15	45	0.75	20	10	3X	3X
25	75	1.26	20	10	5X	5X
37.5	112.5	1.88	20	10	5X	5X
50	150	2.51	20	10	7X	7X
75	225	3.77	20	10	9X	7X
100	300	5.02	20	10	9X	11X
167	500	8.37	20	10	9X	11X
---	750	12.55	30	20	9X	11X
---	1000	16.73	40	20	9X	11X
---	1500	25.10	50	30	9X	9X
---	2000	33.47	70	40	9X	9X

Note: All settings for single-phase transformers are based on a phase-to-neutral connection.

D-5 COMPARISON OF S&C, COOPER, AND G&W TRIP SETTINGS.

The VFI trip settings for S&C, Cooper, and G&W switchgear are not equivalent. Although all types of VFIs can follow an E-speed curve, the S&C settings emulate S&C fuses, whereas the Cooper and G&W settings do not. Figure D-6 provides an example for a trip setting of 100 amperes. Notice that the G&W VFI will trip at 100 amperes, but the S&C Vista VFI will not trip until about 200 amperes. This difference in trip characteristic should be considered when establishing trip settings.

Figure D-6 Comparison of S&C Vista and G&W Switchgear VFI Settings

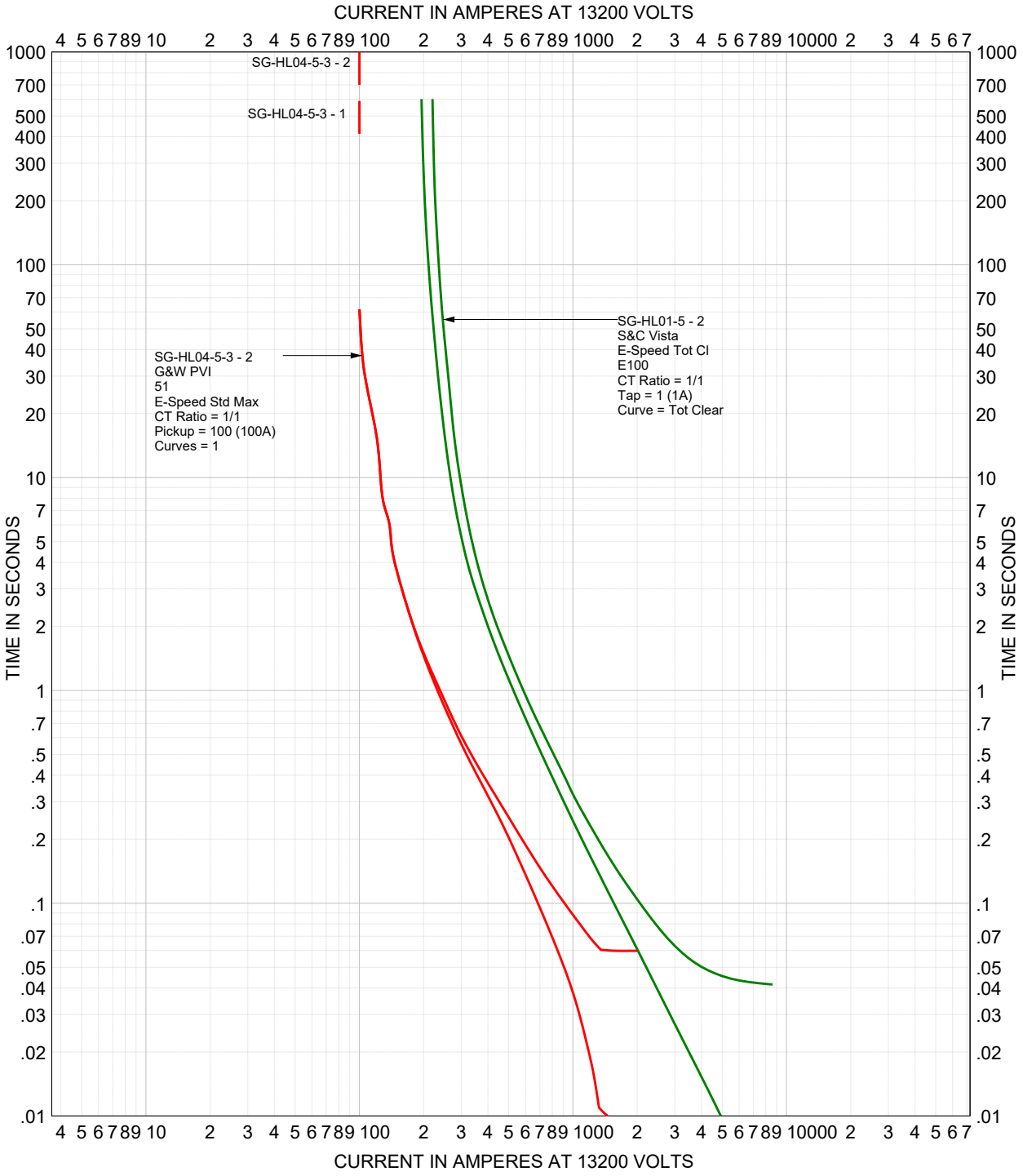

APPENDIX E STANDARD OPERATING PROCEDURES FOR ENERGIZED WORK PERMITS

E-1 OVERVIEW.

This appendix addresses the use of Standard Operating Procedures (SOPs) as a means of satisfying the energized work permit requirements of UFM 3-560-01. The preferred work approach is to establish an electrically safe work condition by deenergizing the equipment before allowing work. However, there are routine activities on the primary distribution system that involve energized work.

Done properly, an energized work permit is a time-consuming, detailed evaluation of the planned work and the safety precautions required to ensure the work is performed safely. For specified tasks, an SOP is a pre-approved energized work permit that can simplify the preparation for an energized work activity while still complying with mandated regulations and industry standards.

E-1.1 OSHA Criteria.

OSHA 29 CFR 1910.333 limits work on live energized electrical equipment as follows: "*Live parts to which an employee may be exposed shall be deenergized before the employee works on or near them, unless the employer can demonstrate that deenergizing introduces additional or increased hazards or is not feasible due to equipment design or operational limitations*."

E-1.2 SOP Limitations.

SOPs are recommended for electrical-related work activities that might be performed routinely. Unusual or non-routine work activities that involve working on or near energized electrical equipment require an energized work permit in accordance with UFM 3-560-01.

An SOP is a pre-approved energized work permit rather than a detailed technical procedure. The SOP assumes that the qualified electrical worker is proficient in the technical aspects of the designated work activity and the SOP focuses on the safety aspects that would be typically included in an energized work permit.

E-1.3 Items to Address in an SOP.

Develop SOPs by a risk assessment based upon job hazard analyses (JHA) using Operational Risk Management (ORM) principles. Include the following in an SOP:

- The purpose of the SOP;
- References and definitions appropriate for the work activity;
- The hazards that will be avoided by using the SOP;

- Specific procedures that will be used to reduce/minimize/eliminate the hazards;
- Potential energy sources, including limits of approach;
- Specific required training/certifications;
- Number of required employees;
- Rescue procedures and equipment;
- Potential incident energy level exposure;
- Appropriate personal protective equipment (PPE) such as arc rated clothing, face shields, and electrical gloves for exposure level; and
- Management approvals.

The following sections provide examples of SOPs that might be appropriate for working on the primary distribution system:

- Appendix E-2 provides a sample SOP for operating fused cutouts from a bucket truck; and
- Appendix E-3 provides a sample SOP for operating loadbreak elbows from grade.

E-2 SAMPLE SOP – FUSED CUTOUTS: OPENING, CLOSING, OR REPLACING FUSES.

The following is a sample SOP for operating overhead distribution fused cutouts or replacing fuse links inside cutouts.

1.0 Purpose.

This procedure defines the requirements for opening fused cutouts, closing fused cutouts, or replacing fuse links in fused cutouts on the overhead distribution system.

2.0 Applicability.

This procedure applies to exterior electrical shop personnel that are designated as a qualified person with respect to working on or near primary overhead distribution systems.

3.0 References.

- 29 CFR 1910
- UFM 3-560-01
- NFPA 70E

4.0 Definitions.

Arc Flash Hazard. A dangerous condition associated with the possible release of energy caused by an electric arc.

Arc Rating. The value attributed to materials that describes their performance to exposure to an electrical arc discharge. The arc rating is expressed in cal/cm2 and is derived from the determined value of the arc thermal performance value (ATPV) or energy of breakopen threshold (EBT) (should a material system exhibit a breakopen response below the ATPV value). Arc rating is reported as either ATPV or EBT, whichever is the lower value.

Balaclava (Sock Hood). An arc-rated hood that protects the neck and head except for the facial area of the eyes and nose.

Boundary, Arc Flash. When an arc flash hazard exists, an approach limit at a distance from a prospective arc source within which a person could receive a second degree burn if an electrical arc flash were to occur.

Boundary, Limited Approach. An approach limit at a distance from an exposed energized electrical conductor or circuit part within which a shock hazard exists.

Boundary, Restricted Approach. An approach limit at a distance from an exposed energized electrical conductor or circuit part within which there is an increased likelihood of electric shock, due to electrical arc-over combined with inadvertent movement, for personnel working in close proximity to the energized electrical conductor or circuit part.

De-energized. Free from any electrical connection to a source of potential difference and from electrical charge; not having a potential different from that of the earth.

Electrical Hazard. A dangerous condition such that contact or equipment failure can result in electric shock, arc flash burn, thermal burn, or blast.

Electrical Safety. Recognizing hazards associated with the use of electrical energy and taking precautions so that hazards do not cause injury or death.

Electrically Safe Work Condition. A state in which an electrical conductor or circuit part has been disconnected from energized parts, locked/tagged in accordance with established standards, tested to ensure the absence of voltage, and grounded if determined necessary.

Exposed (as applied to energized electrical conductors or circuit parts). Capable of being inadvertently touched or approached nearer than a safe distance by a person. It is applied to electrical conductors or circuit parts that are not suitably guarded, isolated, or insulated.

Fused Cutout. A pole mounted interrupting device, equipped with fuses, that provides a method for de-energizing and protecting downstream electrical equipment.

Incident Energy. The amount of thermal energy impressed on a surface, a certain distance from the source, generated during an electrical arc event. Incident energy is typically expressed in calories per square centimeter (cal/cm^2).

Live Line Tool. An insulated tool that electrically insulates the worker from the energized conductor and provides physical separation from the device being operated.

Low-Voltage. Any voltage below 600 V.

Medium Voltage. Voltages above 600 and ranging to 34,500 V.

Qualified Person. One who has demonstrated skills and knowledge related to the construction and operation of electrical equipment and installations and has received safety training to identify and avoid the hazards involved.

Shock Hazard. A dangerous condition associated with the possible release of energy caused by contact or approach to energized electrical conductors or circuit parts.

Unqualified Person. A person who is not a qualified person.

Working On (energized electrical conductors or circuit parts). Intentionally coming in contact with energized electrical conductors or circuit parts with the hands, feet, or other body parts, with tools, probes, or with test equipment, regardless of the personal protective equipment (PPE) a person is wearing. There are two categories of "working on": 1) diagnostic (testing) is taking readings or measurements of electrical equipment with approved test equipment that does not require making any physical change to the equipment; and, 2) repair is any physical alteration of electrical equipment (such as making or tightening connections, removing or replacing components, etc.).

5.0 Training and Qualification Requirements.

Personnel using this procedure must be trained and qualified in the following:

Emergency response training. Contact release. First aid, emergency response, and resuscitation.

Qualified Person Employee training. A qualified person must be trained and knowledgeable in the construction and operation of equipment or a specific work method and be trained to identify and avoid the electrical hazards that might be present with respect to that equipment or work method. For this SOP, this includes working inside an elevated bucket, handling of live-line tools, and pole-top rescue.

Document all training.

6.0 Required Approach Distances.

Table E-2-1 lists the minimum approach distances from exposed alternating current energized parts within which a qualified worker may not approach without the use of PPE appropriate for the potential electrical hazards, or place any conductive object without an approved insulating handle, unless certain other work techniques are used (such as isolation, insulation, shielding, or guarding).

Table E-2-1 Qualified Worker Minimum Approach Distances – AC Systems

Nominal System Voltage Range Phase to Phase (1)	Arc Flash Boundary	Limited Approach Boundary		Restricted Approach Boundary (3) (4)
	From Phase to Phase Voltage (5), (6)	Exposed Movable Conductor	Exposed Fixed Circuit Part	Includes Standard Inadvertent Movement Adder
50 V to 150 V	(2)	10 ft 0 in (3.0 m)	3 ft 6 in (1.0 m)	Avoid contact
>151 V to 750 V	(2)	10 ft 0 in (3.0 m)	3 ft 6 in (1.0 m)	1 ft 0 in (0.3 m)
>750 V to 15 kV	(2)	10 ft 0 in (3.0 m)	5 ft 0 in (1.5 m)	2 ft 2 in (0.7 m)
>15 kV to 36 kV	(2)	10 ft 0 in (3.0 m)	6 ft 0 in (1.8 m)	2 ft 7 in (0.8 m)
>36 kV to 46 kV	(2	10 ft 0 in (3.0 m)	8 ft 0 in (2.5 m)	2 ft 9 in (0.8 m)
>46 kV to 72.5 kV	(2)	10 ft 0 in (3.0 m)	8 ft 0 in (2.5 m)	3 ft 3 in (1.0 m)
>72.5 kV to 121 kV	(2)	10 ft 8 in (3.3 m)	8 ft 0 in (2.5 m)	3 ft 4 in (1.0 m)
>121 kV to 145 kV	(2)	11 ft 0 in (3.4 m)	10 ft 0 in (3.0 m)	3 ft 10 in (1.2 m)

Notes for Table E-2-1:

1. *For single phase systems select the range that is equal to the system's maximum phase to ground voltage times 1.732.*
2. *The arc flash boundary is determined by an arc flash analysis.*
3. *The restricted approach boundary is defined as the distance between energized parts and grounded objects without insulation, isolation, or guards.*
4. *The restricted approach distance applied to hot sticks is the distance between a worker's hand and the working end of the stick.*
5. *Only qualified workers wearing appropriate PPE are permitted within the arc flash boundary.*

7.0 Personal Protective Equipment.

Comply with NFPA 70E.

De-energizing equipment before opening equipment is the preferred work procedure. If mission prohibits de-energizing equipment:

1. Review arc flash label or arc flash calculation for potential incident energy level;

2. If no label or current arc flash calculation, perform arc flash calculation to determine potential incident energy level;

3. Select PPE equipment to exceed calculated potential incident energy level; and,

4. If calculated incident energy level exceeds available PPE rating (in-house or contracted workforce), equipment de-energizing is mandatory.

8.0 Opening a Fused Cutout.

Perform the following steps:

Note: If the overhead distribution circuit overcurrent protection includes reclosing ability, disable upstream reclosing before starting work. Enable reclosing when work is complete.

1. Conduct pre-job brief. Ensure all personnel are wearing required PPE. Confirm communication is established with all crew members.

2. If possible, remove load from the fused cutouts by opening the secondary main breakers in all facilities supplied through the fused cutouts.

3. Select voltage-rated gloves with leather protectors. Inspect voltage-rated gloves and leather protectors before use. Wear voltage-rated gloves with leather protectors while performing all work inside the bucket.

4. Select and inspect the live-line insulated tool (hot stick) being used for the work. Confirm that hot sticks have been dry tested within the last 6 months and wet tested with the last 2 years. Ensure that all tools are rated for the voltage being worked on.

5. Position the insulated bucket truck in a position as far as possible from active traffic lanes. Place cones, barricades, and traffic markers as appropriate. Turn on all warning flashers and yellow beacons (day and night).

6. Enter and maneuver the bucket close enough to reach the fused cutouts with the insulated tool without having to reach or lean outside of the bucket.

7. Grasp the hot stick with both hands and insert the working end into the pull handle on the individual fused cutout. Pull it open in one smooth motion.

8. Open the remaining fused cutouts by the same process described above.

9. If changing the fuse(s), use the hot stick to lift and remove the fuse cartridge from the fused cutouts. To install the replacement fuse cartridge, pick up the fuse

cartridge with the working end of the hot stick, position the fuse, and drop into place in the fused cutout.

10. When work is complete, return all equipment (PPE, live-line tools, and voltage-rated gloves) to their protective containers. Confirm that all tools that were used are accounted for.

9.0 Closing a Fused Cutout.

Perform the following steps:

Note: If the overhead distribution circuit overcurrent protection includes reclosing ability, disable upstream reclosing before starting work. Enable reclosing when work is complete.

1. Conduct pre-job brief. Ensure all personnel are wearing required PPE. Confirm communication is established with all crew members.

2. If possible, remove load from the fused cutouts by opening the secondary main breakers in all facilities supplied through the fused cutouts.

3. Select voltage-rated gloves with leather protectors. Inspect voltage-rated gloves and leather protectors before use. Wear voltage-rated gloves with leather protectors while performing all work inside the bucket.

4. Select and inspect the live-line insulated tool (hot stick) being used for the work. Confirm that hot sticks have been dry tested within the last 6 months and wet tested with the last 2 years. Ensure that all tools are rated for the voltage being worked on.

5. Position the insulated bucket truck in a position as far as possible from active traffic lanes. Place cones, barricades, and traffic markers as appropriate. Turn on all warning flashers and yellow beacons (day and night).

6. Enter and maneuver the bucket close enough to reach the fused cutouts with the insulated tool without having to reach or lean outside of the bucket.

7. Grasp the hot stick with both hands and insert the working end into the pull handle on the individual fused cutout. Lift and push closed in one smooth motion.

8. Close the remaining fused cutouts by the same process described above.

9. If changing the fuse(s), use the hot stick to lift and remove the fuse cartridge from the fused cutouts. To install the replacement fuse cartridge, pick up the fuse cartridge with the working end of the hot stick, position the fuse, and drop into place in the fused cutout.

10. When work is complete, return all equipment (PPE, live-line tools, and voltage-rated gloves) to their protective containers. Confirm that all tools that were used are accounted for.

11. If load was removed from the fused cutouts by opening the secondary main breakers in facilities supplied through the fused cutouts, restore power to the facilities by closing the secondary main breakers.

E-3 SAMPLE SOP – CONNECTING/DISCONNECTING LOADBREAK ELBOWS.

The following is a sample SOP for connecting or disconnecting load break elbows.

1.0 Purpose.

This procedure defines the requirements for or connecting or disconnecting load break elbows on an energized circuit.

2.0 Applicability.

This procedure applies to exterior electrical shop personnel that are designated as a qualified person with respect to working on or near primary underground distribution systems.

3.0 References.

- 29 CFR 1910, *Occupational Safety and Health, General Industry Standards*
- Unified Facilities Criteria (UFC) 3-560-01, *Electrical Safety, O&M*
- NFPA 70E, *Electrical Safety in the Workplace*

4.0 Definitions.

Arc Flash Hazard. A dangerous condition associated with the possible release of energy caused by an electric arc.

Arc Rating. The value attributed to materials that describes their performance to exposure to an electrical arc discharge. The arc rating is expressed in cal/cm2 and is derived from the determined value of the arc thermal performance value (ATPV) or energy of breakopen threshold (EBT) (should a material system exhibit a breakopen response below the ATPV value). Arc rating is reported as either ATPV or EBT, whichever is the lower value.

Balaclava (Sock Hood). An arc-rated hood that protects the neck and head except for the facial area of the eyes and nose.

Boundary, Arc Flash. When an arc flash hazard exists, an approach limit at a distance from a prospective arc source within which a person could receive a second degree burn if an electrical arc flash were to occur.

Boundary, Limited Approach. An approach limit at a distance from an exposed energized electrical conductor or circuit part within which a shock hazard exists.

Boundary, Restricted Approach. An approach limit at a distance from an exposed energized electrical conductor or circuit part within which there is an increased likelihood of electric shock, due to electrical arc-over combined with inadvertent movement, for personnel working in close proximity to the energized electrical conductor or circuit part.

De-energized. Free from any electrical connection to a source of potential difference and from electrical charge; not having a potential different from that of the earth.

Elbow. A connector component for connecting a power conductor to a bushing, designed so that when assembled with the bushing, the axes of the conductor and bushing are perpendicular.

Electrical Hazard. A dangerous condition such that contact or equipment failure can result in electric shock, arc flash burn, thermal burn, or blast.

Electrical Safety. Recognizing hazards associated with the use of electrical energy and taking precautions so that hazards do not cause injury or death.

Electrically Safe Work Condition. A state in which an electrical conductor or circuit part has been disconnected from energized parts, locked/tagged in accordance with established standards, tested to ensure the absence of voltage, and grounded if determined necessary.

Exposed (as applied to energized electrical conductors or circuit parts). Capable of being inadvertently touched or approached nearer than a safe distance by a person. It is applied to electrical conductors or circuit parts that are not suitably guarded, isolated, or insulated.

Incident Energy. The amount of thermal energy impressed on a surface, a certain distance from the source, generated during an electrical arc event. Incident energy is typically expressed in calories per square centimeter (cal/cm^2).

Insulated Cap. An accessory device designed to electrically insulate, electrically shield, and mechanically seal a bushing insert or integral bushing.

Insulated Parking Bushing. An accessory device designed to electrically insulate, electrically shield, and mechanically seal a power cable terminated with an elbow and installed into a parking stand.

Live Line Tool. An insulated tool that electrically insulates the worker from the energized conductor and provides physical separation from the device being operated.

Loadbreak Connector. A connector designed to close and interrupt rated load current or less on energized circuits under rated conditions.

Low-Voltage. Any voltage below 600 V.

Medium Voltage. Voltages above 600 and ranging to 34,500 V.

Qualified Person. One who has demonstrated skills and knowledge related to the construction and operation of electrical equipment and installations and has received safety training to identify and avoid the hazards involved.

Separable Insulated Connector. A fully insulated and shielded system for terminating an insulated power conductor to electrical apparatus, other power conductors, or both, and designed such that the electrical connection can be readily made or broken by engaging the connector at the operating interface.

Shock Hazard. A dangerous condition associated with the possible release of energy caused by contact or approach to energized electrical conductors or circuit parts.

Unqualified Person. A person who is not a qualified person.

Working On (energized electrical conductors or circuit parts). Intentionally coming in contact with energized electrical conductors or circuit parts with the hands, feet, or other body parts, with tools, probes, or with test equipment, regardless of the personal protective equipment (PPE) a person is wearing. There are two categories of "working on": 1) diagnostic (testing) is taking readings or measurements of electrical equipment with approved test equipment that does not require making any physical change to the equipment; and, 2) repair is any physical alteration of electrical equipment (such as making or tightening connections, removing or replacing components, etc.).

5.0 Training and Qualification Requirements.

Personnel using this procedure must be trained and qualified in the following:

Emergency response training. Contact release. First aid, emergency response, and resuscitation.

Qualified Person Employee training. A qualified person must be trained and knowledgeable in the construction and operation of equipment or a specific work method and be trained to identify and avoid the electrical hazards that might be present with respect to that equipment or work method.

Document all training.

6.0 Required Approach Distances.

Table E-3-1 lists the minimum approach distances from exposed alternating current energized parts within which a qualified worker may not approach without the use of PPE appropriate for the potential electrical hazards, or place any conductive object without an approved insulating handle, unless certain other work techniques are used (such as isolation, insulation, shielding, or guarding).

Table E-3-1 Qualified Worker Minimum Approach Distances – AC Systems

Nominal System Voltage Range Phase to Phase (1)	Arc Flash Boundary	Limited Approach Boundary		Restricted Approach Boundary (3) (4)
	From Phase to Phase Voltage (5), (6)	Exposed Movable Conductor	Exposed Fixed Circuit Part	Includes Standard Inadvertent Movement Adder
50 V to 150 V	(2)	10 ft 0 in (3.0 m)	3 ft 6 in (1.0 m)	Avoid contact
>151 V to 750 V	(2)	10 ft 0 in (3.0 m)	3 ft 6 in (1.0 m)	1 ft 0 in (0.3 m)
>750 V to 15 kV	(2)	10 ft 0 in (3.0 m)	5 ft 0 in (1.5 m)	2 ft 2 in (0.7 m)
>15 kV to 36 kV	(2)	10 ft 0 in (3.0 m)	6 ft 0 in (1.8 m)	2 ft 7 in (0.8 m)
>36 kV to 46 kV	(2	10 ft 0 in (3.0 m)	8 ft 0 in (2.5 m)	2 ft 9 in (0.8 m)
>46 kV to 72.5 kV	(2)	10 ft 0 in (3.0 m)	8 ft 0 in (2.5 m)	3 ft 3 in (1.0 m)
>72.5 kV to 121 kV	(2)	10 ft 8 in (3.3 m)	8 ft 0 in (2.5 m)	3 ft 4 in (1.0 m)
>121 kV to 145 kV	(2)	11 ft 0 in (3.4 m)	10 ft 0 in (3.0 m)	3 ft 10 in (1.2 m)

Notes for Table E-3-1:

1. *For single phase systems select the range that is equal to the system's maximum phase to ground voltage times 1.732.*
2. *The arc flash boundary is determined by an arc flash analysis.*
3. *The restricted approach boundary is defined as the distance between energized parts and grounded objects without insulation, isolation, or guards.*
4. *The restricted approach distance applied to hot sticks is the distance between a worker's hand and the working end of the stick.*
5. *Only qualified workers wearing appropriate PPE are permitted within the arc flash boundary.*

7.0 Personal Protective Equipment.

Confirm equipment is de-energized/locked out/tagged out. If equipment is to remain energized,

1. View arc flash label for incident energy level.
2. If label not present, calculate equipment incident energy level.
3. Select the minimum PPE level as required by NFPA 70E for the calculated incident energy level.

Voltage-rated gloves with leather protectors (Table E-3-2) for work inside the restricted approach boundary. Select as follows:

Table E-3-2 Rubber Insulating Equipment Voltage Requirements

Class of Equipment	Color Label	Maximum Use (AC Volts)	Minimum Distance[1] in Inches (Millimeters)
00	Beige	500	1 (25)
0	Red	1,000	1 (25)
1	White	7,500	1 (25)
2	Yellow	17,000	2 (50)
3	Green	26,500	3 (75)
4	Orange	36,000	4 (100)

Notes for Table: Wear leather protectors over rubber gloves. Minimum distance is the minimum length that the exposed rubber glove must extend beyond the leather protector.

8.0 Precautions.

Maneuver loadbreak connectors with an eight foot fully insulated “shot gun” line-line type tool. Ensure the working area is clear of obstructions or contaminants that might interfere with the operation of the connector or cause it to fall into the exposed bushing well. The operating position should allow establishing a firm footing and enable grasping the live-line tool securely, while maintaining positive control over the movement of the loadbreak connector before, during, and directly after the operating sequence. Because of the control, speed, and force required to engage or disengage an elbow, certain operating positions are more advantageous than others. If there are any concerns regarding an adequate position for handling a loadbreak connector, the operation must be performed on a de-energized circuit.

The following lists additional precautions and limitations for handling loadbreak connectors on an energized circuit:

- Limit work to dry weather conditions. Do not operate loadbreak connectors during wet conditions;

- Loadbreak connectors can be operated inside manholes only if the work can be accomplished with the qualified electrical worker standing outside the manhole at grade;
- Operation (connecting or disconnecting) loadbreak connectors inside a manhole with the qualified electrical worker standing inside the manhole is prohibited;
- Making a connection into a suspected fault is prohibited. De-energize the circuit prior to connection;
- If a fault occurs during connection or disconnection, replace the elbow connector and the bushing;
- Never connect an energized load break elbow into a transformer that has not been tested for proper operation;
- Never connect loadbreak elbow type surge arresters into an energized transformer or circuit;
- Never use a loadbreak connector to switch energized capacitors; and
- Check the appropriate manufacturer's operating instructions to confirm the device(s) is rated for energized operation, either connecting or disconnecting.

9.0 Loadbreak Operation (Connecting) at Grade.

Perform the following steps:

Note: This operation might be performed as part of a switching order. If so, then coordinate the Activity with the rest of the switching order.

1. Conduct pre-job brief. Ensure all personnel are wearing required PPE. Confirm communication is established with all crew members.
2. Select voltage-rated gloves with leather protectors using Table E-3-2. Inspect voltage-rated gloves and leather protectors before use. Wear voltage-rated gloves with leather protectors while performing all work.
3. Select and inspect the live-line insulated tool (hot stick) being used for the work. Confirm that hot sticks have been dry tested within the last 6 months and wet tested with the last 2 years. Ensure that all tools are rated for the voltage being worked on.
4. Ensure the area is clear of obstructions or contaminants that might interfere with the operation of the connector.

5. Open the equipment where the loadbreak connector operation will be performed.

6. Prepare the bushing for the elbow connector by removing the insulated cap. Attach the live-line tool to the insulated cap pulling eye and remove from the bushing.

7. Securely fasten a shot gun live-line tool to the load break connector pulling eye.

Note: This procedure assumes that the loadbreak connector is on an insulated parking bushing on the apparatus parking stand before work starts.

8. Without exerting any pulling force, slightly rotate the connector to break any surface friction prior to disconnection from the insulated parking bushing on the apparatus parking stand.

9. After establishing a firm footing and positive control of the elbow connector, withdraw the elbow from the insulated parking bushing on the apparatus parking stand with a fast, firm, and straight motion, while being careful to avoid the ground plane.

10. Place the elbow connector receptacle area over the bushing plug and insert the elbow male contact (arc flower portion) into the bushing until a slight resistance is felt. Immediately push the elbow into the locked position with a fast, firm, and straight motion. Apply sufficient force to engage the internal lock on the elbow connector and bushing interface.

11. When work is complete, return all equipment (PPE, live-line tools, and voltage-rated gloves) to their protective containers. Confirm that all tools that were used are accounted for.

10.0 **Loadbreak Operation (Disconnecting) at Grade.**

Perform the following steps:

Note: This operation might be performed as part of a switching order. If so, then coordinate the Activity with the rest of the switching order.

1. Conduct pre-job brief. Ensure all personnel are wearing required PPE. Confirm communication is established with all crewmembers.

2. Select voltage-rated gloves with leather protectors using Table E-3-2. Inspect voltage-rated gloves and leather protectors before use. Wear voltage-rated gloves with leather protectors while performing all work.

3. Select and inspect the live-line insulated tool (hot stick) being used for the work. Confirm that hot sticks have been dry tested within the last 6 months and wet

tested with the last 2 years. Ensure that all tools are rated for the voltage being worked on.

4. Ensure the area is clear of obstructions or contaminants that might interfere with the operation of the connector.

5. Open the equipment where the loadbreak connector operation will be performed.

6. Place the insulated parking bushing on the apparatus parking stand.

7. Firmly tighten a shot gun live-line tool to the loadbreak connector pulling eye.

8. Without exerting any pulling force, slightly rotate the connector to break any surface friction prior to disconnection.

9. After establishing a firm footing and positive control of the elbow connector, withdraw the elbow from the bushing with a fast, firm, and straight motion, while being careful to avoid the ground plane.

10. Place the connector on the insulated parking bushing and secure.

11. When work is complete, return all equipment (PPE, live-line tools, and voltage-rated gloves) to their protective containers. Confirm that all tools that were used are accounted for.

APPENDIX F SAMPLE MAINTENANCE PROGRAM CHECKLISTS

Front Page

SHOP RWP BOOK REVIEW					
INSPECTOR:		DATE:			
SECTION A	RWP LISTING FOR ALL FREQUENCIES	YES	NO	N/A	FINDINGS/REMARKS
	1. Are all the craft codes correct?				
	2. Are all the maintenance frequencies correct?				
	3. Have estimated hours been cross checked with actual hours?				
	4. Is each MAS number correct for the task listed?				
SECTION B	MAINTENANCE ACTION SHEETS				
	1. Is the cost center correct for all MAS sheets?				
	2. Is each MAS description accurate?				
	3. Are all task frequencies correct?				
SECTION C	DETAILED EQUIPMENT LIST				
	1. Are the items in priority order?				
	2. Are Bldg numbers correct?				
	3. Are all equipment install dates listed?				
	4. Are recommended replacement dates listed for each item/system?				
	5. Have replacement costs been identified?				
	6. Are there open jobs for old items?				
	7. Has the condition code been indicated for each item?				
	8. Has the Equipment List been cross checked with the RWP Facility List?				
	9. Has the Equipment List -Recommended Replacement Dates- been cross checked with the 5 yr Projects List?				
SECTION D	FIVE YEAR PROJECTS				
	1. Have 5 yr projects been identified and submitted to ME?				
SECTION E	BOOK REVIEW CHECKLISTS and COST ANALYSIS REPORTS				
	1. Has a Shop RWP Book Review Checklist been completed?				
SECTION F	BASE MAP				
	1. Does the shop have all current applicable base maps?				
SECTION G	HISTORY				
	1. Is there a Prior Year Shop RWP Book Review?				

Back Page

REMARKS 1
FOLLOW UP

APPENDIX G SAMPLE LIFE CYCLE COST MAINTENANCE WORKSHEET

RECURRING WORK PROGRAM WORKSHEET

RWP Item:

Review Date	Initials	Comments	Review Date	Initials	Comments

Review Method: ☐ Requirement Elimination ☐ MAPCO ☐ Life-Cycle Cost

Approximate Cost of Item Being Maintained:

Requirement Elimination:

Can the RWP item be removed due to the very low replacement cost of the item and non-mission criticality? YES NO
Can the item be replaced with any zero-maintenance components? YES NO
Can the RWP item be contracted out to a service contractor? YES NO

Comments:

Man-Hour Ceiling/Priority Analysis (MAPCO)

Note: The MAPCO method is designed to help show whether a shop has enough manning to accomplish particular RWP items and help determine alternate ways of accomplishing required RWP tasks.

Is this a mandatory RWP item? YES NO

Note: If this is not a mandatory RWP item even though it is costs effective, this particular item should be prioritized for accomplishment after all other mandatory items are completed and additional manhours are available.

Is shop manning sufficient to accomplish this RWP item as required? YES NO
Can this item be included in the 1219 program? YES NO
Can this item be done through a service contract? YES NO

Comments:

Life-Cycle Cost Analysis

Note: The Life-Cycle Cost Analysis method is used to determine the economic value of doing a particular RWP item as compared to the cost of doing no maintenance and simply replacing the piece of equipment when it breaks. This method is typically used for large items of critical value to a facility.

1. Item replacement price (installed): $ 25,000.00
2. Item re-build cost: $8,000.00
3. Cost of RWP item per Month: $50 (Material) + $50 (Labor) = $ 100.00
   Cost of RWP item per Quarter: $100 (Material) + $100 (Labor) = $ 200.00
   Cost of RWP item per Year: $150 (Material) + $150 (Labor) = $ 300.00

(A) Freq of Mx	(B) Freq of Failure	(C) Annual RWP Cost	(D) PC of Repair/Replace	(E) PC of RWP	(F) Total PC of Option
Monthly	15	$2,300.00	$8,000.00	$34,500.00	$42,500.00
Quarterly	10	$1,500.00	$12,000.00	$22,500.00	$34,500.00
Annually	5	$600.00	$24,000.00	$9,000.00	$33,000.00
Never	2	$0.00	$60,000.00	$0.00	$60,000.00

(B): Determine Frequency of Failure from manufacturer data (years until failure)
(C): Number of RWP occurences within the year x cost per occurrence from 3 above
(D): Replacement cost (item 1 above) x # of replacements needed to reach highest number in (B)
(E): Column (C) x highest number of years from Column (B)
(F): Column (D) + Column (E)

APPENDIX H SAMPLE MAPCO MAINTENANCE DOCUMENT

RWP: Recurring Work Program

Method 3: Man-hour Ceiling/Priority Analysis Method (MAPCO)

It can be very difficult for many work centers to provide the manpower needed to properly implement the recurring work program. Every center has a limited number of man-hours that can be committed to a project. The Operations Flight understands this, and realizes that an alternative to the life-cycle cost analysis method and RWP requirement elimination method is sometimes needed. The third and final RWP method is called, "man-hour ceiling/priority analysis method," or MAPCO. MAPCO enlists the help of program engineers, innovative problem solving in a team setting, and effective scheduling by the work center manager. There are many benefits that can be realized by this method of RWP.

To use MAPCO, the following conditions should be present:

- limitations on manpower in the work center
- the scope of RWP is known
- the locations of RWP is known
- the materials for RWP are known

There are several options for making RWP successful under the above conditions. A manager should consider using a combination of options in order to have an effective program in the work center.

The following are options for successfully implementing RWP in a work-center with limited manpower available:

- Manager can budget man-hours to RWP on a prioritized schedule so that most important issues are budgeted first. The inspection schedule should be completed every year.
- Execute RWP in conjunction with a facility visit (such as 1219-type work). When the work is scheduled, WIMS can generate a listing of RWP for that facility throughout the period between the visit and the next programmed visit. This listing will include the mandatory requirements followed by the nonmandatory requirements. As the crafts pursue the 1219 Direct Scheduled Work and Maintenance Action Sheet requirements, they complete all mandatory RWP items. At the end of the visit, if additional man-hours are available in the schedule, they can begin to complete the nonmandatory items in priority order.
- Contract redundant, manpower intensive, or critical RWP requirements. This decision is typically a team decision, made by the program engineers, work center chiefs, and senior craftsmen.
- MAPCO benefits RWP because it optimizes the program in a thorough stepped process. It also improves engineer and work center coordination, and increases engineer exposure to the infrastructure environment.

APPENDIX I RECOMMENDED TESTING INTERVALS

	Frequency						
Device	As needed	Weekly	Monthly	Semi-annually	Annually	Every 2 years	Every 5 years
Aerial lift devices	x						
Anchor assemblies	x						
Anchors, submarine cable	x						
Arresters, surge, visual inspection	x				x		
Arresters, surge, electrical tests	x					x	
Batteries, booster charge	x		x				
Batteries, check	x		x		x		
Batteries, equalizing charge	x		x				
Batteries in storage	x			x			
Battery maintenance test equipment	x		x				
Battery chargers	x		x				
Buses, substation	x		x				
Bushings, inspection	x				x		
Bushings, power factor tests	x						
Bushings, insulation resistance test	x						
Cable maintenance tests					x		
Cable, overhead	x						
Cable, paper-insulated	x				x		
Cable, pressure	x				x		
Cable records	x						
Cable, submarine					x		
Cable, underground, routine inspection						x	
Cable, underground, insulation resistance					x		
Cable, varnished-cambric	x						
Capacitors	x			x			
Capacitor bushings	x						
Capacitor busbar supports	x						
Circuit breaker maintenance						x	
Circuit breaker, high-voltage					x		
Circuit breaker, medium-voltage	x					x	
	Frequency						

Device	As needed	Weekly	Monthly	Semi-annually	Annually	Every 2 years	Every 5 years
Circuit breaker, low-voltage	x					x	
Circuit switchers						x	
Conductor re-sagging						x	
Connections					x		
Connectors, tap	x						
Contacts			x				
Control magnet-operated devices			x		x		
Control thermally-operated devices			x				
Control motor-operated devices			x				
Control mechanically-operated devices				x			
Control static accessories				x			
Control, non-electromagnetic				x			
Crossarms							x
Cutouts							x
Disconnecting switches						x	
Fuse	x						
Grounds	x					x	
Guys and anchors	x						
Hardware							x
Instruments and meters-inspection	x			x			
Instruments and meters-tests							
Insulating liquids	x						
Insulators, distribution	x						x
Insulators, substation	x					x	
Interference	x						
Interference, harmonic	x						
Lamps		x					
Leathergoods				x			
Lightning protection shielding devices	x			x			
Luminaires					x		
Manholes					x		
Meters and instruments-inspection	x						
Meters and instruments-tests					x		
Poles, metal	x						
Poles, concrete	x						
	Frequency						

Device	As needed	Weekly	Monthly	Semi-annually	Annually	Every 2 years	Every 5 years
Portable or mobile substations	x						
Potheads	x				x		
Reclosers, automatic circuit	x				x		
Regulator, voltage					x		
Relays	x						
Relay settings					x		
Resistors, bypass	x						
Rubber goods				x			
Service drop						x	
Street lighting fixtures					x		
Street lighting lamps	x						
Street lighting photocells					x		
Street lighting protective relays						x	
Street lighting primary oil switch						x	
Substation fence and gate			x				
Substation signs			x				
Substation yard	x						
Substation overall, infrared					x		
Substation overall, visual			x				
Switch, load interrupter	x					x	
Switch, photoelectric				x			
Switch, time (accuracy)			x				
Switch, time (contacts)					x		
Tap changer, load					x		
Telephone interference	x						
Terminations	x				x		
Test instrument calibrations, analog				x			
Test instrument calibrations, other					x		
Tools, live-line inspection	x						
Tools, live-line test records	x				x		
Transformer, constant current					x		
Transformer, distribution					x		
Transformer, instrument	x						
Transformer, power	x						x
Tree trimming	x					x	

Note: If system(s) have reliability requirement established by other requirements, no not exceed presented recommended frequencies.

APPENDIX J GLOSSARY

J-1 ACRONYMS

A	Ampere
AC	Alternating Current
AFI	Air Force Instruction
AMR	Anisotropic Magnetic Resistance
ATPV	Arc Thermal Performance Value
BIA	Bilateral Infrastructure Agreement
CAD	Computer-Aided Drafting
CAIDI	Customer Average Interruption Duration Index
CFR	Code of Federal Regulations
cm	Centimeters
CN	Concentric Neutrals
CT	Current Transformer
DC	Direct Current
DG	Distributed Generation
DGA	Dissolved Gas Analysis
DGS	Distributed Generation System
DSM	Demand Side Management
EBT	Energy of Breakopen Threshold
EPM	Electrical Preventative Maintenance
ETL	Engineering Technical Letter
FPOC	Facility Point Of Connection
GIS	Geographical Information Systems
HVAC	Heating, Ventilation, and Air Conditioning
ICS	Industrial Control System
IP	Internet Protocol
ft	Feet (or Foot)
Hp	Horsepower
Hz	Hertz
I^2t	Current Squared Time
in	Inch
JHA	Job Hazard Analysis
kA	Kiloampere
kV	Kilovolt
kVA	Kilo-Volt-Ampere
kVAR	Kilo-Volt-Ampere-Reactive
kW	Kilowatt
kWh	Kilowatt-hour
LCCA	Life Cycle Cost Analysis
m	Meter
MAPCO	Man-hour Ceiling/Priority Analysis Method
MCCB	Molded Case Circuit Breaker

MDL	Minimum Daytime Load
MG	Motor-Generator
MOSA	Metal-Oxide Surge Arresters
mm	Millimeter
MTS	Maintenance Test Specifications
MV	Medium Voltage
NEC	National Electric Code
NESC	National Electrical Safety Code (IEEE C2)
NICET	National Institute for Certification in Engineering Technologies
NTS	National Testing Standards
O&M	Operation and Maintenance
ORM	Operational Risk Management
PCB	Polychlorinated Biphenyls
PI	Polarization Index
PLC	Programmable Logic Controller
PPE	Personal Protective Equipment
PPM	Parts Per Million
PQM	Power Quality Monitoring
PT	Potential Transformer
rms	Root-Mean-Square
RUS	Rural Utility Service
RWP	Recurring Work Program
SAIDI	System Average Interruption Duration Index
SAIFI	System Average Interruption Frequency Index
SCADA	Supervisory Control And Data Acquisition
SDS	Safety Data Sheet
SF6	Sulfur Hexafluoride
SOP	Standard Operating Procedure
TC	Time-Current
TDR	Test Domain Reflectometer
TOV	Transient Overvoltage
TSEWG	Tri-Service Electrical Working Group
UFC	Unified Facilities Criteria
UFM	Unified Facilities Manual
UFGS	Unified Facilities Guide Specifications
V	Volts
VAR	Volt Amperes Reactance
VFI	Vacuum Fault Interrupter
VLF	Very Low Frequency
VRLA	Valve-Regulated Lead Acid
X/R	Ratio of Reactance to Resistance

J-2 DEFINITION OF TERMS

Arc Flash Hazard. A dangerous condition associated with the possible release of energy caused by an electric arc.

Arc Rating. The value attributed to materials that describes their performance to exposure to an electrical arc discharge. The arc rating is expressed in cal/cm2 and is derived from the determined value of the arc thermal performance value (ATPV) or energy of breakopen threshold (EBT) (should a material system exhibit a breakopen response below the ATPV value). Arc rating is reported as either ATPV or EBT, whichever is the lower value.

Balaclava (Sock Hood). An arc-rated hood that protects the neck and head except for the facial area of the eyes and nose.

Boundary, Arc Flash. When an arc flash hazard exists, an approach limit at a distance from a prospective arc source within which a person could receive a second degree burn if an electrical arc flash were to occur.

Boundary, Limited Approach. An approach limit at a distance from an exposed energized electrical conductor or circuit part within which a shock hazard exists.

Boundary, Restricted Approach. An approach limit at a distance from an exposed energized electrical conductor or circuit part within which there is an increased likelihood of electric shock, due to electrical arc-over combined with inadvertent movement, for personnel working in close proximity to the energized electrical conductor or circuit part.

Chicken Switch: Remote actuating device to operate an interrupting device from a safe distance. Typically electrically operated, magnetic device that can remotely activate a switch.

De-energized. Free from any electrical connection to a source of potential difference and from electrical charge; not having a potential different from that of the earth.

Elbow. A connector component for connecting a power conductor to a bushing, designed so that when assembled with the bushing, the axes of the conductor and bushing are perpendicular.

Electrical Hazard. A dangerous condition such that contact or equipment failure can result in electric shock, arc flash burn, thermal burn, or blast.

Electrical Safety. Recognizing hazards associated with the use of electrical energy and taking precautions so that hazards do not cause injury or death.

Electrically Safe Work Condition. A state in which an electrical conductor or circuit part has been disconnected from energized parts, locked/tagged in accordance with

established standards, tested to ensure the absence of voltage, and grounded if determined necessary.

Exposed (as applied to energized electrical conductors or circuit parts). Capable of being inadvertently touched or approached nearer than a safe distance by a person. It is applied to electrical conductors or circuit parts that are not suitably guarded, isolated, or insulated.

Fused Cutout. A pole mounted interrupting device, equipped with fuses, that provides a method for de-energizing and protecting downstream electrical equipment.

Incident Energy. The amount of thermal energy impressed on a surface, a certain distance from the source, generated during an electrical arc event. Incident energy is typically expressed in calories per square centimeter (cal/cm^2).

Insulated Cap. An accessory device designed to electrically insulate, electrically shield, and mechanically seal a bushing insert or integral bushing.

Insulated Parking Bushing. An accessory device designed to electrically insulate, electrically shield, and mechanically seal a power cable terminated with an elbow and to be installed into a parking stand.

Live Line Tool. An insulated tool that electrically insulates the worker from the energized conductor and provides physical separation from the device being operated.

Loadbreak Connector. A connector designed to close and interrupt rated load current or less on energized circuits under rated conditions.

Low-Voltage. Any voltage below 600 V.

Low Voltage System: An electrical system having a maximum root-mean-square (rms) voltage of less than 1,000 volts.

Medium Voltage. Voltages above 600 and ranging to 34,500 V.

Medium Voltage System: An electrical system having a maximum RMS AC voltage of 1,000 volts to 34.5 kV. Some documents such as ANSI C84.1 define the medium voltage upper limit as 100 kV, but this definition is inappropriate for facility applications.

Qualified Person. One who has demonstrated skills and knowledge related to the construction and operation of electrical equipment and installations and has received safety training to identify and avoid the hazards involved.

Separable Insulated Connector. A fully insulated and shielded system for terminating an insulated power conductor to electrical apparatus, other power conductors, or both, and designed such that the electrical connection can be readily made or broken by engaging the connector at the operating interface.

Shock Hazard. A dangerous condition associated with the possible release of energy caused by contact or approach to energized electrical conductors or circuit parts.

Unqualified Person. A person who is not a qualified person.

Working On (energized electrical conductors or circuit parts). Intentionally coming in contact with energized electrical conductors or circuit parts with the hands, feet, or other body parts, with tools, probes, or with test equipment, regardless of the personal protective equipment (PPE) a person is wearing. There are two categories of “working on”: Diagnostic (testing) is taking readings or measurements of electrical equipment with approved test equipment that does not require making any physical change to the equipment; repair is any physical alteration of electrical equipment (such as making or tightening connections, removing or replacing components, etc.).