CHAPTER 6: SPECIAL CONSIDERATIONS IN EXPLOSIVE FACILITY DESIGN

CHAPTER 6 SPECIAL CONSIDERATIONS IN EXPLOSIVE FACILITY DESIGN:

INTRODUCTION 6-1
6-1 PURPOSE. 6-1
6-2 OBJECTIVE. 6-1
6-3 BACKGROUND. 6-1
6-4 SCOPE. 6-2
6-5 FORMAT. 6-4
6-6 CHAPTER CONTENTS. 6-4
MASONRY 6-4
6-7 GENERAL INFORMATION. 6-4
6-7.1 Limits on the Use of Masonry Construction. 6-5
6-7.2 Materials. 6-5
6-7.3 Material Strengths. 6-8
6-7.4 Masonry Wall Construction. 6-15
6-7.5 Compression and Tension Membrane Capacity. 6-17
6-7.6 Dynamic Analysis. 6-18
6-7.7 Response Criteria. 6-19
6-7.8 Rebound. 6-19
6-8 REINFORCED MASONRY WALLS. 6-19
6-8.1 General Requirements and Construction Procedures. 6-19
6-8.2 Ultimate Flexural Moment Capacity. 6-20
6-8.3 Reinforcing Steel Limitations. 6-21
6-8.4 Splices and Development of Reinforcement. 6-22
6-8.5 Moment of Inertia. 6-23
6-9 UNREINFORCED MASONRY WALLS. 6-23
6-9.1 Brittle Flexural Response. 6-24
6-9.2 Axial Load Arching. 6-25
6-9.3 Unreinforced Multi-Wythe Walls. 6-26
PRECAST CONCRETE 6-41

6-10 APPLICATIONS. 6-41
6-11 STATIC STRENGTH OF MATERIALS. 6-41
6-11.1 Concrete. 6-41
6-11.2 Reinforcing Bars. 6-41
6-11.3 Welded Wire Reinforcement 6-42
6-11.4 Prestressing Tendons. 6-42
6-12 DYNAMIC STRENGTH OF MATERIALS. 6-42
6-13 ULTIMATE STRENGTH OF PRECAST ELEMENTS. 6-43
6-13.1 Ultimate Dynamic Moment Capacity of Prestressed Beams. 6-43
6-13.2 Diagonal Tension and Direct Shear of Prestressed Elements. 6-46
6-14 DYNAMIC ANALYSIS. 6-46
6-15 REBOUND. 6-48
6-15.1 Non-prestressed elements. 6-48
6-15.2 Prestressed elements. 6-48
6-16 CONNECTIONS. 6-49
6-16.1 General. 6-49
6-16.2 Column-to-Foundation Connection. 6-50
6-16.3 Roof Slab-to-Girder Connection. 6-50
6-16.4 Wall Panel-to-Roof Slab Connection. 6-50
6-16.5 Wall Panel-to-Foundation Connection. 6-50
6-16.6 Panel Splice. 6-50
6-16.7 Reinforcement Around Door Openings. 6-50
SPECIAL PROVISIONS FOR PRE-ENGINEERED BUILDING 6-56
6-17 GENERAL. 6-56
6-18 GENERAL LAYOUT. 6-57
6-18.1 Structural Steel. 6-57
6-18.2 Foundations. 6-58
6-18.3 Roof and Walls. 6-58
6-18.4 Connections for Roof and Wall Coverings. 6-58
6-19 PREPARATION OF PARTIAL BLAST ANALYSIS. 6-59
6-20 PRE-ENGINEERED BUILDING DESIGN. 6-59

6-21 BLAST EVALUATION OF THE STRUCTURE. 6-60
6-22 RECOMMENDED SPECIFICATION FOR PRE-ENGINEERED BUILDINGS. 6-60
SUPPRESSIVE SHIELDING 6-71
6-23 GENERAL. 6-71
6-24 APPLICATION. 6-71
6-24.1 Safety Approved Suppressive Shields. 6-72
6-24.2 New Shield Design. 6-72
6-25 DESIGN CRITERIA. 6-74
6-26 DESIGN PROCEDURES. 6-74
6-26.1 Space Requirements. 6-74
6-26.2 Charge Parameters. 6-74
6-26.3 Fragment Parameters. 6-75
6-26.4 Structural Details. 6-75
6-26.5 Access Penetrations. 6-76
BLAST RESISTANT WINDOWS 6-89
6-27 INTRODUCTION. 6-89
6-28 BACKGROUND. 6-90
6-29 DESIGN CRITERIA FOR GLAZING. 6-91
6-29.1 Specified Glazing. 6-91
6-29.2 Design Stresses. 6-91
6-29.3 Dynamic Response to Blast Load. 6-91
6-29.4 Design Charts. 6-92
6-29.5 Alternate Design Procedure. 6-93
6-30 DESIGN CRITERIA FOR FRAMES. 6-96
6-30.1 Sealants, Gaskets, and Beads. 6-96
6-30.2 Glazing Setting. 6-96
6-30.3 Frame Loads. 6-96
6-30.4 Rebound. 6-97
6-31 ACCEPTANCE TEST SPECIFICATION. 6-98
6-31.1 Test Procedure - Window Assembly Test. 6-98
6-31.2 Acceptance Criteria. 6-99

6-31.3 Certification for Rebound. 6-100
6-32 INSTALLATION INSPECTION. 6-100
UNDERGROUND STRUCTURES 6-150
6-33 INTRODUCTION. 6-150
6-34 DESIGN LOADS FOR UNDERGROUND STRUCTURES. 6-150
6-34.1 General. 6-150
6-34.2 Roof Loads. 6-151
6-34.3 Wall Loads. 6-151
6-35 STRUCTURAL DESIGN. 6-152
6-35.1 Wall and Roof Slabs. 6-152
6-35.2 Burster Slab. 6-153
6-36 STRUCTURE MOTIONS. 6-153
6-36.1 Shock Spectra. 6-153
6-36.2 Shock Isolation Systems. 6-153
EARTH-COVERED ARCH-TYPE MAGAZINES 6-156
6-37 GENERAL 6-156
6-38 DESCRIPTION OF EARTH-COVERED ARCH-TYPE MAGAZINES. 6-157
6-39 SEPARATION DISTANCES OF STANDARD MAGAZINES. 6-158
6-40 DESIGN. 6-158
6-41 CONSTRUCTION. 6-158
6-42 NON-STANDARD MAGAZINES. 6-159
BLAST VALVES 6-162
6-43 GENERAL. 6-162
6-43.1 Applications. 6-162
6-43.2 Remote-Actuated Valves. 6-162
6-43.3 Blast-Actuated Valves. 6-163
6-43.4 Plenums. 6-163
6-43.5 Fragment Protection. 6-164
6-44 TYPES OF BLAST VALVES. 6-164
6-44.1 General. 6-164
6-44.2 Blast Shield. 6-165

6-44.3 Sand Filter. 6-165
6-44.4 Blast Resistant Louvers. 6-165
6-44.5 Poppet Valves. 6-165
SHOCK ISOLATION SYSTEMS 6-179
6-45 INTRODUCTION. 6-179
6-46 OBJECTIVES. 6-179
6-47 STRUCTURE MOTIONS. 6-180
6-48 SHOCK TOLERANCE OF PERSONNEL AND EQUIPMENT. 6-180
6-48.1 Personnel. 6-180
6-48.2 Equipment. 6-180
6-49 SHOCK ISOLATION PRINCIPLES. 6-181
6-49.1 General Concepts. 6-181
6-49.2 Single-Mass Dynamic Systems. 6-183
6-49.3 Shock Isolation Arrangements. 6-184
6-50 SHOCK ISOLATION DEVICES. 6-188
6-50.1 Introduction. 6-188
6-50.2 Helical Coil Springs. 6-190
6-50.3 Torsion Springs. 6-191
6-50.4 Pneumatic Springs. 6-191
6-50.5 Liquid Springs. 6-192
6-50.6 Other Devices. 6-192
6-51 HARDMOUNTED SYSTEMS. 6-194
6-52 ATTACHMENTS. 6-194
6-52.1 Introduction. 6-194
6-52.2 Design Loads. 6-195

CHAPTER 6 SPECIAL CONSIDERATIONS IN EXPLOSIVE FACILITY DESIGN: FIGURES

Figure 6-1 Typical Masonry Unit Shapes 6-27
Figure 6-2 Typical Reinforced Masonry Construction 6-28
Figure 6-3 Double Wythe Cavity Wall with Brick and CMU 6-29
Figure 6-4a Conventional Masonry Wall Connections to Flexible Supports 6-30
Figure 6-5 Examples of Blast-Resistant Connections 6-32
Figure 6-6 Typical Reinforced Masonry Wall Detail at Foundation 6-33
Figure 6-7 Resisting Moment Provided to Foundation in Cohesive Soil 6-34
Figure 6-8 Resisting Moment Provided to Foundation in Granular Soil 6-35
Figure 6-9 Frame Supports for Masonry Walls 6-36
Figure 6-10 Typical Reinforced Masonry Wall with Splices and Low Lift Grouting 6-37
Figure 6-11 Resistance-Deflection Curve for Unreinforced Masonry Wall with Axial Load Arching 6-38
Figure 6-12 Axial Load Arching in Unreinforced Masonry Walls 6-39
Figure 6-13 Detailed Resistance-Deflection Curves for Unreinforced Masonry Wall with Axial Load Arching 6-40
Figure 6-14 Common Precast Elements 6-51
Figure 6-15 Typical Stress-Strain Curve for High Strength Wire 6-52
Figure 6-16 Roof Slab-to-Girder Connection 6-53
Figure 6-17 Typical Wall Panel-to-Roof Slab Connection 6-54
Figure 6-18 Wall Panel-to-Foundation Connection 6-55
Figure 6-19 Typical Panel Splice 6-56
Figure 6-20 General Layout of Pre-Engineered Building 69
Figure 6-21 Recommended Pre-Engineered Building Design Loads 6-70
Figure 6-22a General Configuration of Suppressive Shield Groups 6-79
Figure 6-23 Typical Utility Penetration 6-81
Figure 6-24 Typical Location of Utility Penetration in Shield Groups 4, 5 and 81mm 6-82
Figure 6-25 Typical Location of Utility Penetration in Shield Group 3 6-83
Figure 6-26 Typical Vacuum Line Penetration 6-84

Figure 6-27 Sliding Personnel Door 6-85
Figure 6-28 Door – Group 3 Shield 6-86
Figure 6-29 Rotating Product Door 6-87
Figure 6-30 Characteristic Parameters for Glass Pane, Blast Loading, Resistance Function and Response Model 6-101
Figure 6-31 Peak Blast Pressure Capacity for Tempered Glass Panes (*a*/*b* = 1.00, *t* = 1/4 and 5/16 in) 6-102
Figure 6-32 Peak Blast Pressure Capacity for Tempered Glass Panes (*a*/*b* = 1.00, *t* = 3/8 and 1/2 in) 6-103
Figure 6-33 Peak Blast Pressure Capacity for Tempered Glass Panes (*a*/*b* = 1.00, *t* = 5/8 and 3/4 in) 6-104
Figure 6-34 Peak Blast Pressure Capacity for Tempered Glass Panes (*a*/*b* = 1.25, *t* = 1/4 and 5/16 in) 6-105
Figure 6-35 Peak Blast Pressure Capacity for Tempered Glass Panes (*a*/*b* = 1.25, *t* = 3/8 and 1/2 in) 6-106
Figure 6-36 Peak Blast Pressure Capacity for Tempered Glass Panes (*a*/*b* = 1.25, *t* = 5/8 and 3/4 in) 6-107
Figure 6-37 Peak Blast Pressure Capacity for Tempered Glass Panes (*a*/*b* = 1.50, *t* = 1/4 and 5/16 in) 6-108
Figure 6-38 Peak Blast Pressure Capacity for Tempered Glass Panes (*a*/*b* = 1.50, *t* = 3/8 and 1/2 in) 6-109
Figure 6-39 Peak Blast Pressure Capacity for Tempered Glass Panes (*a*/*b* = 1.50, *t* = 5/8 and 3/4 in) 6-110
Figure 6-40 Peak Blast Pressure Capacity for Tempered Glass Panes (*a*/*b* = 1.75, *t* = 1/4 and 5/16 in) 6-111
Figure 6-41 Peak Blast Pressure Capacity for Tempered Glass Panes (*a*/*b* = 1.75, *t* = 3/8 and 1/2 in) 6-112
Figure 6-42 Peak Blast Pressure Capacity for Tempered Glass Panes (*a*/*b* = 1.75, *t* = 5/8 and 3/4 in) 6-113
Figure 6-43 Peak Blast Pressure Capacity for Tempered Glass Panes (*a*/*b* = 2.00, *t* = 1/4 and 5/16 in) 6-114
Figure 6-44 Peak Blast Pressure Capacity for Tempered Glass Panes (*a*/*b* = 2.00, *t* = 3/8 and 1/2 in) 6-115
Figure 6-45 Peak Blast Pressure Capacity for Tempered Glass Panes (*a*/*b* = 2.00, *t* = 5/8 and 3/4 in) 6-116

Figure 6-46 Peak Blast Pressure Capacity for Tempered Glass Panes (*a*/*b* = 3.00, *t* = 1/4 and 5/16 in) 6-117
Figure 6-47 Peak Blast Pressure Capacity for Tempered Glass Panes (*a*/*b* = 3.00, *t* = 3/8 and 1/2 in) 6-118
Figure 6-48 Peak Blast Pressure Capacity for Tempered Glass Panes (*a*/*b* = 3.00, *t* = 5/8 and 3/4 in) 6-119
Figure 6-49 Peak Blast Pressure Capacity for Tempered Glass Panes (*a*/*b* = 4.00, *t* = 1/4 and 5/16 in) 6-120
Figure 6-50 Peak Blast Pressure Capacity for Tempered Glass Panes (*a*/*b* = 4.00, *t* = 3/8 and 1/2 in) 6-121
Figure 6-51 Peak Blast Pressure Capacity for Tempered Glass Panes (*a*/*b* = 4.00, *t* = 5/8 and 3/4 in) 6-122
Figure 6-52 Nondimensional Static Load-Stress Relationships for Simply Supported Tempered Glass (after Moore) 6-123
Figure 6-53 Nondimensional Static Load-Crater Deflection Relationships for Simply Supported Tempered Glass (after Moore) 6-124
Figure 6-54 Edge, Face and Bite Requirements 6-125
Figure 6-55 Distribution of Lateral Load Transmitted by Glass Pane to the Window Frame 6-125
Figure 6-56 Geometry of a Buried Structure 6-154
Figure 6-57 Typical Roof Panel Load 6-154
Figure 6-58 Contribution of Three Pressure Waves on a Wall 6-155
Figure 6-59 Spall Plate 6-156
Figure 6-60 Typical Earth-Covered Steel-Arch Magazine 6-160
Figure 6-61 Minimum Separation Distances of Standard Magazine 6-161
Figure 6-62 Sketch of 300 cfm Sand Filter 6-174
Figure 6-63 Blast-Actuated Louver 6-175
Figure 6-64 Arrangement of Multiple Louvers for a Large Volume of Air 6-175
Figure 6-65 Typical Blast-Actuated Poppet Value 6-176
Figure 6-66 Time Delay Path 6-176
Figure 6-67 Idealized Model of Shock Isolated Mass 6-177
Figure 6-68 Shock Isolation System 6-196
Figure 6-69 Base Mounted Isolation Systems Configuration 6-197
Figure 6-70 Overhead Pendulum Shock Isolation Systems Using Platforms 6-198

Figure 6-71 Helical Compression Spring Mounts 6-199
Figure 6-72 Typical Torsion Spring Shock Isolation System 6-200
Figure 6-73 Schematic of Single and Double Action Pneumatic Cylinders 6-201
Figure 6-74 Schematic of Liquid Springs 6-201
Figure 6-75 Belleville Springs 6-202

CHAPTER 6 SPECIAL CONSIDERATIONS IN EXPLOSIVE FACILITY DESIGN: TABLES

Table 6-1 Minimum Properties for Ungrouted CMU Block 6-7
Table 6-2 Dynamic Strengths for Reinforced Masonry 6-15
Table 6-3 Response Criteria for Masonry Components 6-19
Table 6-4 Minimum and Maximum Steel Ratios for Reinforced Masonry Components 6-22
Table 6-5 Summary of Suppressive Shield Groups 6-88
Table 6-6 Charge Parameters for Safety Approved Shields 6-89
Table 6-7 Static Design Strength r_u (psi), for Tempered Glass* [*a* = long dimension of glass pane (in); *b* = short dimension of glass pane (in)]..... 6-126
Table 6-8 Minimum Design Thickness, Clearances, and Bite Requirements..... 6-133
Table 6-9 Maximum (*b*/*t*) Ratio for Linear Plate Behavior under Blast Load and Coefficients for Resistance and Deflection and Fundamental Period of Simply Supported Glass Plates Based on Small Deflection Theory (No Tensile Membrane Behavior) 6-133
Table 6-10 Coefficients for Frame Loading..... 6-134
Table 6-11 Statistical Acceptance and Rejection Coefficients 6-135
Table 6-12 Fundamental Period of Vibration, T_n, for Monolithic Tempered Glass..... 6-136
Table 6-13 Effective Elastic Static Resistance, r_{eff} 6-143
Table 6-14 Blast Valves 6-178

CHAPTER 6 SPECIAL CONSIDERATIONS IN EXPLOSIVE FACILITY DESIGN

INTRODUCTION

6-1 PURPOSE.

The purpose of this manual is to present methods of design for protective construction used in facilities for development, testing, production, storage, maintenance, modification, inspection, demilitarization, and disposal of explosive materials.

6-2 OBJECTIVE.

The primary objectives are to establish design procedures and construction techniques whereby propagation of explosion (from one structure or part of a structure to another) or mass detonation can be prevented and to provide protection for personnel and valuable equipment.

The secondary objectives are to:

(1) Establish the blast load parameters required for design of protective structures.

(2) Provide methods for calculating the dynamic response of structural elements including reinforced concrete, and structural steel.

(3) Establish construction details and procedures necessary to afford the required strength to resist the applied blast loads.

(4) Establish guidelines for siting explosive facilities to obtain maximum cost effectiveness in both the planning and structural arrangements, providing closures, and preventing damage to interior portions of structures because of structural motion, shock, and fragment perforation.

6-3 BACKGROUND.

For the first 60 years of the 20th century, criteria and methods based upon results of catastrophic events were used for the design of explosive facilities. The criteria and methods did not include a detailed or reliable quantitative basis for assessing the degree of protection afforded by the protective facility. In the late 1960's quantitative procedures were set forth in the first edition of the present manual, “Structures to Resist the Effects of Accidental Explosions.” This manual was based on extensive research and development programs which permitted a more reliable approach to current and future design requirements. Since the original publication of this manual, more extensive testing and development programs have taken place. This additional research included work with materials other than reinforced concrete which was the principal construction material referenced in the initial version of the manual.

Modern methods for the manufacture and storage of explosive materials, which include many exotic chemicals, fuels, and propellants, require less space for a given quantity of explosive material than was previously needed. Such concentration of explosives increases the possibility of the propagation of accidental explosions (one accidental explosion causing the detonation of other explosive materials). It is evident that a requirement for more accurate design techniques is essential. This manual describes rational design methods to provide the required structural protection.

These design methods account for the close-in effects of a detonation including the high pressures and the nonuniformity of blast loading on protective structures or barriers. These methods also account for intermediate and far-range effects for the design of structures located away from the explosion. The dynamic response of structures, constructed of various materials, or combination of materials, can be calculated, and details are given to provide the strength and ductility required by the design. The design approach is directed primarily toward protective structures subjected to the effects of a high explosive detonation. However, this approach is general, and it is applicable to the design of other explosive environments as well as other explosive materials as mentioned above.

The design techniques set forth in this manual are based upon the results of numerous full- and small-scale structural response and explosive effects tests of various materials conducted in conjunction with the development of this manual and/or related projects.

6-4 SCOPE.

It is not the intent of this manual to establish safety criteria. Applicable documents should be consulted for this purpose. Response predictions for personnel and equipment are included for information.

In this manual an effort is made to cover the more probable design situations. However, sufficient general information on protective design techniques has been included in order that application of the basic theory can be made to situations other than those which were fully considered.

This manual is applicable to the design of protective structures subjected to the effects associated with high explosive detonations. For these design situations, the manual will apply for explosive quantities less than 25,000 pounds for close-in effects. However, this manual is also applicable to other situations such as far- or intermediate-range effects. For these latter cases the design procedures were originally developed for explosive quantities in the order of 500,000 pounds which is the maximum quantity of high explosive approved for aboveground storage facilities in the Department of Defense manual, “DoD Ammunition and Explosives Safety Standards,” DOD 6055.09-M. **1**\ However, DOD 6055.09-M currently addresses explosive quantities of up to 5,000,000 lbs, and the design procedures in this document have been extrapolated for designs to resist accidental explosions on ships of 5,000,000 lbs or more. Although some disasters have involved very high explosive quantities (such as Port Chicago in 1944 which involved around 10,000,000 pounds of explosives), limited testing has been

completed at such high quantities (e.g. the Middle North Series used 1,000,000 lbs TNT, and the Minor Scale and Misty Picture used the equivalent of 8,000,000 lbs TNT). /**1**/ Since tests were primarily directed toward the response of structural steel and reinforced concrete elements to blast overpressures, this manual concentrates on design procedures and techniques for these materials. However, this does not imply that concrete and steel are the only useful materials for protective construction. Tests to establish the response of wood, brick blocks, and plastics, as well as the blast attenuating and mass effects of soil are contemplated. The results of these tests may require, at a later date, the supplementation of these design methods for these and other materials.

Other manuals are available to design protective structures against the effects of high explosive or nuclear detonations. The procedures in these manuals will quite often complement this manual and should be consulted for specific applications.

Computer programs, which are consistent with procedures and techniques contained in the manual, have been approved by the appropriate representative of the US Army, the US Navy, the US Air Force and the Department of Defense Explosives Safety Board (DDESB). These programs are available through the following repositories:

(1) Department of the Army
Commander and Director
U.S. Army Engineer Research and Development Center
Post Office Box 631
Vicksburg, Mississippi 39180-0631
Attn: WESKA

(2) Department of the Navy
Commanding Officer
Naval Facilities Engineering and Expeditionary Warfare Center
1000 23rd Avenue
Port Hueneme, California 93043
Attn: Code CI7

(3) Department of the Air Force
Aerospace Structures
Information and Analysis Center
Wright Patterson Air Force Base
Ohio 45433
Attn: AFFDL/FBR

If any modifications to these programs are required, they will be submitted for review by DDESB and the above services. Upon concurrence of the revisions, the necessary changes will be made and notification of the changes will be made by the individual repositories.

6-5 FORMAT.

This manual is subdivided into six specific chapters dealing with various aspects of design. The titles of these chapters are as follows:

Chapter 1 Introduction

Chapter 2 Blast, Fragment, and Shock Loads

Chapter 3 Principles of Dynamic Analysis

Chapter 4 Reinforced Concrete Design

Chapter 5 Structural Steel Design

Chapter 6 Special Considerations in Explosive Facility Design

When applicable, illustrative examples are included in the Appendices.

Commonly accepted symbols are used as much as possible. However, protective design involves many different scientific and engineering fields, and, therefore, no attempt is made to standardize completely all the symbols used. Each symbol is defined where it is first used, and in the list of symbols at the end of each chapter.

6-6 CHAPTER CONTENTS.

This chapter contains procedures for the design of blast resistant structures other than above ground, cast-in-place concrete or structural steel structures, as well as the design of other miscellaneous blast resistant components. Included herein is the design of reinforced and non-reinforced masonry walls, precast elements with both prestressed and conventional reinforcement, pre-engineered buildings, suppressive shielding, blast resistant windows, underground structures, earth-covered arch-type magazines, blast valves and shock isolation systems.
1\

MASONRY

6-7 GENERAL INFORMATION.

Masonry walls can provide economical resistance to relatively low external blast overpressures when properly designed and detailed, along with other advantageous characteristics such as limited fragment protection (solid masonry), fire protection, acoustical and thermal insulation, and modular construction. General requirements and limitations on the use of masonry for blast resistant design are discussed in this section. Sections 6-8 and 6-9 discuss specific requirements related to blast design with reinforced masonry and unreinforced masonry, respectively.

The primary application of masonry units in blast resistant design is wall construction. Basic variations in wall configurations include the type of masonry unit, such as brick,

clay tile or CMU (concrete masonry unit); the manner in which these units are laid (running bond, stack bond, etc.); the amount of void space in the masonry; the number of wythes of masonry units through the wall thickness (i.e. single or double); and, the amount of steel reinforcement (reinforced or unreinforced masonry). In all cases masonry is similar to concrete in that it is relatively strong in compression and much weaker in tension. Therefore, structural masonry walls are commonly reinforced with vertical reinforcing steel bars that are the same as those used in concrete and with secondary steel wire reinforcement (i.e. joint reinforcement) that is placed horizontally in the bed joints between masonry units.

6-7.1 Limits on the Use of Masonry Construction.

New masonry construction in this UFC is limited to one-story, reinforced CMU walls placed in a running bond with single or multiple wythes. CMU walls may be designed to satisfy Protection Category 1 and Protection Category 2 requirements. All new CMU walls shall be reinforced with vertical steel reinforcing bars that are designed in accordance with Section 6.8. The information in Section 6.9 can be used to determine if existing unreinforced masonry walls provide a sufficient level of protection.

Non-solid masonry walls with any ungrouted voids, including reinforced masonry walls that are not fully grouted, may only be used to provide protection against far-range, external blast loading (i.e. only at charge scaled standoffs greater than 3 ft/lb$^{1/3}$) where there is no direct primary or secondary fragmentation threat. This requirement effectively limits use of these walls to building sides that do not face towards the potential explosion site. Solid, or fully grouted reinforced masonry walls can be designed to provide required fragment protection as described in Section 6-7.3.7. They may also be used at close-in scaled standoffs (i.e. at charge scaled standoff distances of 3 ft/lb$^{1/3}$ and less) if they can be designed to satisfy the required Protection Category requirements and spall protection as described in Section 6-7.3.6.

The design of new masonry walls to resist internal blast loads is not recommended as there are very limited data for this application. For applications involving existing masonry, the wall may not be subjected to combined flexure and tension under internal or external blast loading. Masonry walls may not be used as substantial dividing walls.

Masonry walls are designed to resist blast loads in flexure. Per Section 6-7.4, tension membrane action and compression membrane action may not be considered. For existing unreinforced masonry walls, the additional resistance from axial load arching may be incorporated into the resistance-deflection curve in accordance with Section 6-9.2.

6-7.2 Materials.

Masonry materials consist of masonry units and mortar, which is used to connect the units into a structural component. They can also include reinforcing steel and grout, which causes the reinforcing steel to be composite with the masonry, as well as secondary wire reinforcement placed in the horizontal bed joints between courses of

masonry units. Only vertical steel reinforcement that is grouted into the masonry cells should be used as flexural reinforcement for blast resistant design. Wire reinforcement may be used in horizontal bed joints as required for temperature reinforcement, but should not be considered flexural reinforcement. Masonry walls can have multiple wythes of masonry that are connected with ties placed in the mortar beds of each wythe.

6-7.2.1 Masonry, Mortar, and Grout Materials.

Figure 6-1 (+) shows typical shapes for different types of masonry units. Brick and CMU are the most commonly used masonry units in the United States (U.S.) and Canada, with some use of clay tile. Generally, a masonry unit is described based on its type and its nominal thickness dimension. The actual dimensions of manufactured masonry units are 3/8 inch less than nominal dimensions to allow for the mortar thickness and the thickness of typical interior wall material (i.e. gypsum board). All masonry units must conform to applicable ASTM requirements in TMS 402/ACI 530/ASCE 5 (e.g. CMU must conform to the requirements of ASTM C90). As shown i**n** Figure 6-1, there are many variations of CMU block shapes, including the conventional “stretcher” block, bond beam units, and “A” and “H” shaped blocks that are placed around vertical reinforcement rather than lifted over the reinforcement. All commonly used CMU configurations that comply with ASTM C90 are acceptable for blast design.

Mortar should conform to the requirements of ASTM 270. There are several types of mortar (i.e. Type M, Type S, and Type N) that are commonly used to attach the masonry units together. There are no available data indicating that any of these mortar types are more effective against blast loads. Therefore, all mortar types are acceptable for blast resistant walls. Grout, which is very similar to concrete without large aggregate, is used in the cells of CMU and in the void space between brick and CMU wythes to bond reinforcing bars to the masonry. The grout should comply with the requirements of ASTM 476 and have sufficient plasticity and vibration during placement to avoid air voids or honeycombing unless self-consolidating grout is used. Construction of blast resistant masonry walls should comply with Level C Quality Assurance according to Chapter 1 of TMS 402/ACI 530/ASCE 5. Although only the reinforced cells in CMU are typically grouted in conventional design, all cells are commonly grouted for explosive safety design.

The manufacturing of CMU depends in part on locally available materials, but most modern CMU construction is with lightweight CMU. Heavier weight CMU has been used more in older construction and cold weather climates. It is usually conservative to assume lightweight CMU (i.e. a unit weight of approximately 95 lb/ft^3) for blast design or analysis because this will result in the least calculated mass and corresponding inertial resisting force.

Table 6-1 (+) shows cross sectional property information for typical CMU based on minimum cross section dimensions from the National Concrete Masonry Association (2007). The section modulus, which is not shown in the table, is equal to the moment of

inertia divided by one-half the masonry thickness. The properties of grouted CMU walls can be calculated as shown in Equation 6-1.

6-7.2.2 Steel Reinforcement.

Primary vertical reinforcing steel for masonry walls should be deformed steel bar conforming to ASTM A615 or A706, which is the same as concrete reinforcement. Typically, CMU walls also have joint reinforcement conforming to the requirements of ASTM A951 placed in the horizontal joints to control shrinkage. This wire is typically carbon steel wire that is hot dip galvanized after fabrication for use in exterior walls, and is available in two standard sizes, W1.7 (0.148 inch diameter) and W2.8 (0.188 inch diameter). For blast design, joint reinforcement functions as secondary steel reinforcement that helps to distribute blast loads into the vertical reinforcement.

Table 6-1 Minimum Properties for Ungrouted CMU Block

Nominal Block Thickness (in)	Actual Block Thickness (in)	Face Shell Thickness (in)	Web Thickness (in)	Solid Area Ratio [1,2] (%)	Moment of Inertia (in^4/in)	ψ_m [Note 3]
4	3.625	0.75	0.75	0.5	3.3	0.86
6	5.625	1.0	1.0	0.48	12	0.81
8	7.625	1.25	1.0	0.47	28	0.81
10	9.625	1.25	1.125	0.42	51	0.79
12	11.625	1.25	1.125	0.38	81	0.79

Note 1: Properties shown in table are based on minimum face and web shell dimensions. Actual net cross section of block is generally at least 5% to 10% higher than values that are shown.

Note 2: Ungrouted weight can be based on solid area and unit weight of 95 lb/ft^3 for lightweight CMU. Weights for medium and heavy weight CMU can be obtained assuming same solid area and densities of approximately 115 lb/ft^3 and 130 lb/ft^3, respectively.

Note 3: Ratio of width of voids in block to overall block width (equal to overall block width minus three times web width for CMU block).

$$w = \left(A_{fs}\rho_m + (1 - A_{fs})\frac{V}{100}\rho_g \right) T$$

$$I_n = I_m + \frac{(T - 2t_s)^3}{12}\frac{V}{100}\psi_m \qquad \text{6-1}$$

where:

w = unit weight of grouted cross section

I_n = *net moment of inertia of grouted cross section per unit width (in^4/in)*
A_{fs} = *solid area ratio of cross sectional area (see Table 6-1 (+))*
ρ_m = *density of CMU material (see Note 2 in Table 6-1)*
ρ_g = *density of grout (equal to 120 pcf)*
t_s = *CMU face shell thickness (in) (see Table 6-1)*
T = *masonry thickness (in)*
V = *percent of voids that are grouted*
I_m = *moment of inertia of CMU block per unit width (in^4/in) (see Table 6-1)*
Ψ_m = *ratio of width of voids in CMU block to overall block width (see Table 6-1)*

Figure 6-2 (+) shows masonry walls with vertical reinforcing steel (primary reinforcement) and horizontal reinforcing steel and wire reinforcement placed in the joints (secondary reinforcement). Horizontal ladder joint reinforcement, as shown Figure 6-2, is recommended for reinforced masonry CMU walls rather than truss type joint reinforcement because it interferes much less with grout placement in cells. Horizontal reinforcing steel can also be placed in bond beams that are constructed with special masonry blocks with notched webs, as shown in Figure 6-2. The reinforcement in bond beams may not be used as primary flexural reinforcing steel to resist out-of-plane blast loads in masonry construction.

Openings in masonry walls should be limited as much as possible, both in size and in number. Supplementary vertical reinforcing should be provided on each side of an opening to transfer the blast load over the tributary supported area of the blast resistant door, window, or plate over the opening to the wall's supports. If possible, the windows, plates, or doors covering openings should be designed to span horizontally to the vertical supports along each side of the opening. However, bond beams and lintels above and below an opening may be designed to resist blast load from the tributary supported area of the door or panel over a span length between the vertical reinforcement on each side of the opening.

6-7.3 Material Strengths.

Material strengths, including strengths for masonry response in shear, spall, and fragment penetration, are discussed in this section. Dynamic increase factors can be applied to the material strengths of masonry and reinforcing steel in accordance with Section 6-7.3.8. Other than this, dynamic increase factors should not be used for blast design for masonry.

6-7.3.1 Reinforcing Steel Strength.

Steel reinforcing bars in new reinforced masonry walls should conform to Grades 60 or 75 of ASTM A615 or A706 steel. Existing steel reinforcement may have a lower yield strength of 40 ksi. The modulus of elasticity of the reinforcement is equal to 29,000,000 psi.

6-7.3.2 Masonry Compression Strength.

The compression strength of the masonry units, grout, and mortar acting as a unit are measured together in a masonry prism, which consists of two masonry units with a mortared joint that is tested in compression. The cells of the prism are grouted if the wall is grouted. If the wall construction is partially grouted (contains both ungrouted and grouted cells), then grouted and ungrouted prisms are tested and the compression strength is averaged. The prism is constructed in the field using the materials and workmanship at the jobsite and then tested in the laboratory in a manner similar to concrete cylinders. The resulting compression strength (f'_m) is used in design similarly to the concrete cylinder strength (f'_c). For new blast resistant design, a minimum strength of 2000 psi is required for f'_m. Additionally, a minimum grout strength of 3000 psi is required to enhance composite action between the reinforcing steel and masonry. The modulus of elasticity of a masonry component can be calculated as shown in Equation 6-2. Equation 6-2 is taken from TMS 402/ACI 530/ASCE 5.

$$E_m = K_m f'_m \qquad 6\text{-}2$$

where:

E_m = *modulus of elasticity*
f'_m = *masonry prism strength*
K_m = *900 for CMU*
= *700 for clay tile*

6-7.3.3 Masonry Flexural Design.

The flexural strength of masonry for blast design is based on a dynamic flexural tensile strength (i.e. modulus of rupture), f_{dt}, of 200 psi. If f'_m exceeds 2000 psi, f_{dt} can be taken as 10% of f'_m provided that it does not exceed 250 psi. These values represent the dynamic adhesion strength between the mortar and masonry along a bed joint at strain-rates representative of masonry response to far-range blast loading. Masonry flexural strength is only used in the analysis of unreinforced masonry walls since the flexural strength of reinforced masonry walls is based on the tensile strength of the reinforcing steel, as discussed in Section 6-8.

The values for f_{dt} were developed by a trial and error procedure where they caused single-degree-of-freedom (SDOF) analyses to match the measured response of unreinforced masonry walls well, on the average, from a large number of high explosive tests (i.e. over 50 tests), where wall response was observed primarily in terms of damage levels and a limited number of measured deflections (Oswald, 2005). These values for f_{dt} are applicable for modern masonry construction (i.e. since 1960) that is in good condition, laid in running-bond pattern, and without substantial infilling of former

openings. Masonry walls in poor condition (e.g. deteriorating mortar) should not be assumed to have any significant blast resistance.

6-7.3.4 Shear (Diagonal Tension) Strength.

Masonry walls develop maximum out-of-plane shear stress near their supports due to flexural response to blast load. Also, the support shear or reaction load applied to the roof diaphragm by the response of walls to blast load on the perpendicular side of the building causes in-plane shear stress on masonry walls that are shear walls in the lateral load resisting system for the building. Both types of shear stress are related to the ultimate support shear, V_u, as described in Section 3-15. The in-plane and out-of-plane shear strengths are calculated as shown in Equation 6-3. The masonry cross sectional areas resisting out-of-plane and in-plane shear (i.e. net areas) are calculated with Equation 6-4a and Equation 6-4b, respectively. The net shear area of fully grouted CMU or solid masonry walls for both in-plane and out-of-plane shear is equal to the full cross sectional area. Only in-plane shear caused by the reaction loads from blast-loaded walls must be considered. The masonry shear strength of walls with net tension load over the cross section is zero.

The net shear area for out-of-plane shear loading of partially grouted CMU or other non-solid masonry is the solid area of the masonry plus the area of any grouted voids. The critical section for the maximum out-of-plane shear force near the support is determined in the same manner as for concrete (see Figure 4-14 (+) and Section 4-27). The net area for in-plane shear loading of load bearing CMU or other non-solid masonry is the face shell area plus the area of any grouted cores. The net shear areas are defined in Equation 6-4a and Equation 6-4b. Equation 6-3 is generally based on TMS 402/ACI 530/ASCE 5, conservatively without consideration of compressive axial load, and blast test data where heavily reinforced CMU walls failed in shear.

$$V_m = 2\sqrt{f'_m}A_n \qquad \text{6-3}$$

where:

V_m = *dynamic shear strength of masonry (lb/in)*
f'_m = *masonry prism compressive strength (psi)*
A_n = *net cross section for shear (in^2/in)*
= A_{no} *from Equation 6-4a for out-of-plane shear loading*
= A_{ni} *from Equation 6-4b for in-plane shear loading*

$$A_{no} = \left(A_{fs} + (1 - A_{fs})\frac{V}{100}\right)d \qquad \text{6-4a}$$

where:

A_{no} = *net cross section for out-of-plane shear (in^2/in)*
d = *effective depth (distance from the extreme compression fiber to the centroid of the tension reinforcement). Note that d = wall thickness for unreinforced masonry.*
A_{fs} = *solid area ratio of masonry cross sectional area (see Table 6-1 (+))*
V = *percentage of void area that is grouted*

$$A_{ni} = \left(K_v T + \left(1 - K_v\right) 2t_s\right) \frac{L_v}{L} \qquad \text{6-4b}$$

where:

A_{ni} = *net cross section for in-plane shear (in^2/in)*
K_v = *1 for solid and fully grouted cross sections*
= *0 for partially grouted or ungrouted cross sections*
T = *wall thickness (in)*
t_s = *thickness of face shell (See Table 6-1 (+)) (in)*
L_v = *shear wall length resisting in-plane shear (in) (typically 80% of total wall length)*
L = *total wall length for shear wall*

In cases where the ultimate support shear force at the critical shear section exceeds the masonry shear strength, V_m, in Equation 6-3, shear reinforcement with an area A_v should be designed to carry the excess shear force. The summed shear resistance from the masonry and shear reinforcement for in-plane and out-of-plane shear (considered separately) should not exceed Equation 6-6. Both Equation 6-5 and Equation 6-6 are based on TMS 402/ACI 530/ASCE 5. For out-of-plane shear, the shear reinforcement in Equation 6-5 should be spaced at a maximum distance of d/2, where d is defined in Equation 6-5, to ensure that the reinforcement will cross the shear failure plane. This is typically a spacing of one-half the wall thickness. Unfortunately, this requirement causes the use of stirrups (as used in concrete construction) to be impractical for single wythe clay tile and CMU walls because the stirrups can only be placed in the bed joints (i.e. at 8 inch spacing) and these types of masonry are usually only manufactured up to 12 inches thick, although 14 inch and 16 inch units are available in some areas. Therefore, masonry walls usually must be designed so that the out-of-plane masonry shear strength exceeds the design shear force.

$$A_v = \frac{V_s s_v}{0.5 f_{dy} d} \qquad \text{6-5}$$

where:

A_v = *area of shear reinforcement per unit width along support (in^2/in)*
V_s = *shear force resisted by shear reinforcement per unit width along support (lb/in)*
s_v = *spacing between stirrups along span (maximum spacing at one-half the wall thickness for out-of-plane shear loading)*
f_{dy} = *dynamic yield stress of the shear reinforcement*
d = *distance from extreme compression fiber to centroid of tension reinforcement. Note that d = wall thickness for unreinforced masonry.*

$$V_m + V_s \leq 4\sqrt{f'_m}A_n \qquad \text{6-6}$$

where:

V_m = *in-place or out-of-plane shear strength of masonry (lb/in)*
V_s = *in-place or out-of-plane shear force resisted by shear reinforcement (lb/in)*
A_n = *applicable net cross section for shear (See Equation 6-3) (in^2/in)*
f'_m = *masonry prism compressive strength (psi)*

Shear walls can be subject to combined out-of-plane and in-plane shear. In this case, the shear capacity of the wall against in-plane and out-of-plane shear loads should satisfy Equation 6-7.

$$\left(\frac{V_{uo}}{V_{mo} + V_{so}}\right)^2 + \left(\frac{V_{ui}}{V_{mi} + V_{si}}\right)^2 \leq 1.0 \qquad \text{6-7}$$

where:

V_{mo} = *out-of-plane shear force resisted by masonry (lb)*
V_{so} = *out-of-plane shear force resisted by shear reinforcement (lb)*
V_{mi} = *in-plane shear force resisted by masonry (lb)*
V_{si} = *in-plane shear force resisted by shear reinforcement (lb)*
V_{uo} = *peak applied out-of-plane shear force (lb)*
V_{ui} = *peak applied in-plane shear force (lb)*

6-7.3.5 Direct Shear Strength.

Direct shear stresses can develop in components due to early time response that is dominated by a shear response mode, rather than flexure. After this very early time response, flexural response dominates and causes diagonal shear stresses. The direct

shear strength of grout in the cells of reinforced masonry can be calculated in the same manner as concrete (see Section 4-19.2), using 16% of the grout compression strength. Calculations considering variables causing worse case direct shear stresses indicate that no direct shear failure is expected for reinforced masonry walls that satisfy all of the following requirements: 1) the wall may be exposed to external blast load only, 2) the charge scaled standoff distance is greater than 3 ft/lb$^{1/3}$, and 3) the wall height (i.e. span between supports) is 8 ft or greater. A large database of blast tests on unreinforced masonry walls with far-range blast loading also indicates that direct shear is not a failure mode of concern for these walls, which are very weak in flexure. Therefore, direct shear in the masonry wall itself is not typically a design concern for masonry walls subject to far-range loading.

Walls must always be designed to resist direct shear at the supports if the wall is subject to close-in blast loading or if there are any joints at the supports. This includes the typical case where the wall is placed on top of a concrete slab that provides lateral support. Shear friction may be used to resist direct shear forces across a joint in the wall if the reinforcing bars are developed across the joint. For example, dowel reinforcing bars may be considered as shear friction reinforcement if they are developed across the joint between the foundation and the wall. This is also true for flexural bars, since direct shear is assumed to occur before significant flexural response. The direct shear strength in shear friction, V_{dm}, can be calculated as shown in Equation 6-8. The development of reinforcing steel in masonry is addressed in Section 6-8.

$$V_{dm} = 0.6 A_{vd} f_{dy} \qquad \text{6-8}$$

where:

V_{dm} = *dynamic shear friction strength per unit width along wall (lb/in)*
A_{vd} = *area of reinforcing steel that is developed on both sides of direct shear plane between the masonry wall and foundation per unit width along wall (in^2/in)*
f_{dy} = *dynamic yield strength of reinforcing across direct shear plane (psi)*

6-7.3.6 Direct Spalling and Breach Resistance.

Spalling and breach of solid or fully grouted masonry walls can be predicted using the same approach shown for concrete in Section 4-55, with the exception that the masonry wall is required to have a thickness that is 1.5 times greater than that required for concrete in Equation 4-178. Also, the masonry prism compression strength, f'_m, should be used in place of the concrete compression strength, f'_c, in Equation 4-180a. The safety factor of 1.5, coupled with the overall requirement of the 1.2 safety factor on the charge weight in Chapter 1, is required until there is adequate test data for spalling and breach of solid masonry walls to determine a more accurate approach.

Additionally, CMU masonry with any ungrouted cells should not be used when the peak design blast pressure exceeds 40 psi. Tests have shown that the face shells of ungrouted masonry cells can fail as short beams spanning between webs during very early time response to these peak blast pressures, thus preventing ungrouted cells from spanning between reinforced cells in partially reinforced CMU walls.

6-7.3.7 Penetration Resistance.

Only solid masonry walls should be used for walls subject to fragment impact from an accidental explosion. Fragment penetration through solid masonry should be determined with the same approach as penetration through concrete in Section 4-60.4 using the masonry material compression strength, f'_{mc}, in place of the concrete compression strength, f'_c. The value of f'_{mc} should be the lesser of the masonry block or grout compression strength. Conservatively, f'_{mc} can be assumed equal to 1900 psi for masonry that is in good condition unless more accurate information is available. Calculations using the procedures outlined in this section (i.e. using concrete penetration equations in Section 4-60 and values for f'_{mc} in place of f'_c) overpredicted all measured penetration depths and matched all perforation cases for experiments where twenty-five small steel cubes (i.e. 0.5 inch and 0.63 inch) were shot into unreinforced CMU, grouted CMU, and brick walls at velocities between 3000 ft/sec and 5000 ft/sec (Bowles, et al 1998).

6-7.3.8 Dynamic Increase Factors.

There is very limited test data on the relationship between strain-rate and masonry properties. Dynamic increase factors (DIF) and static strength increase factors (SIF) similar to those for reinforced concrete with far-range loading (see Chapter 4) are considered applicable for reinforced masonry. The dynamic design strengths for reinforced masonry based on these DIF and SIF are shown in Table 6-2 (+). Conservatively, these SIF and DIF can also be used for close-in range loading. Otherwise, no DIF or SIF should be used for masonry design.

Table 6-2 Dynamic Strengths for Reinforced Masonry

Material	Response Mode	Dynamic Strength
Masonry	Compression due to Flexure	1.19 f'_m
	Shear	1.00 f'_m
	Axial Compression	1.12 f'_m
Steel Reinforcement	Tension due to Flexure	1.17 f_y(SIF)
	Shear	1.0 f_y(SIF)

$_m$ is masonry prism strength
f_y is minimum specified reinforcing steel yield strength
SIF is the static increase factor equal to 1.1

6-7.4 Masonry Wall Construction.

6-7.4.1 Multi-Wythe Walls.

A masonry wall can be constructed as a single, monolithic wythe with one or more units through the thickness acting compositely, or as a cavity wall consisting of multiple, closely spaced masonry wythes with an air gap or insulation between wythes. Many modern masonry walls in the northern part of the U.S. and Canada are cavity walls to provide required insulation and help prevent moisture migration into the building. Figure 6-3 (+) shows a cavity wall constructed with brick and CMU. Cavity walls can also be constructed with other types of masonry. These walls are connected together across the gap between wythes with ties or tabs, as illustrated in Figure 6-3, which cause both wythes to deflect together in a non-composite manner when conventional lateral loads are applied to the outer wythe. The outer wythe of multi-wythe walls may be referred to as a veneer wall, which is typically an unreinforced, non-structural wall that acts only as a facade and prevents moisture penetration.

New blast-resistant multi-wythe masonry walls should be designed assuming only the inner wythe acts as a structural wythe. Therefore, the inner wythe requires reinforcement, and the outer wythe may be unreinforced and acts only as additional mass. The ties connecting the wythes can be designed for conventional loads for this case, assuming the ties may fail during blast loading. However, failure of the outer wythe is a concern when the failed debris can fall onto an inhabited area or low roof area below. For cases where multi-wythe walls must stay attached, the ties should be designed in tension and compression for a pressure load equal to the smaller of; 1) the ultimate resistance of the outer wythe in flexure, 2) the ultimate resistance of the inner wythe in flexure, or 3) twice the peak blast pressure, acting over the tributary area supported by the tie with a safety factor of 1.3. The effects of any eccentricity in the

connection points of the ties into each wythe on the connector capacity should be considered.

In conventional construction, multi-wythe walls with the same material in each wythe can be designed to act compositely, where the inner wall is in tension and the outer wall is in compression. However, this approach is impractical and is not recommended for blast design of reinforced masonry walls because of the large number of steel stirrups required between the wythes to transfer the full dynamic yield strength of the reinforcing steel into the adjacent wythe. Composite and non-composite unreinforced multi-wythe masonry walls are discussed more in Section 6.9.3.

6-7.4.2 Connections.

Blast resistant masonry walls must have a connection at each support consisting of a connection plate bearing against the supporting component, embedded steel reinforcement (i.e. steel dowels into the foundation), or other form of positive connection that will resist the design reaction load from inbound and rebound response of the wall as determined by dynamic analyses (see Section 6-7.6). Usually a bearing connection is only effective for response in one direction (i.e. inbound wall response). Figure 6-4a (+) and Figure 6-4b (+) show typical connections between non-load bearing masonry walls and supporting frame members in conventional construction. These connections are not recommended. They have relatively low strengths and typically, will not be sufficient to resist the design reaction loads. Connections for blast-loaded walls are often steel angles or plates that are bolted into the wall and supporting frame or foundation or welded to embedded structural steel plates. Figure 6-5 (+) shows generic blast-resistant connections.

6-7.4.3 Foundation Considerations.

The foundation system, such as that shown in Figure 6-6 (+), provides support at the bottom of masonry walls. Typically, the bottom of a masonry wall is connected with reinforcing steel dowels to a foundation consisting of a continuous reinforced concrete or CMU stem wall and spread footing. Conservatively, this connection can be assumed as a pinned connection when analyzing the flexural response of the wall, which limits the wall resistance to blast load, the reaction force at the foundation, and the corresponding shear stress in the wall. To help ensure that the wall responds consistently with this assumption, the splice between the dowels and vertical reinforcing steel should be limited to the compression splice length as would be typical for conventional design. Alternatively, for CMU walls designed to withstand an external blast load only, a full tension splice length located out of the maximum moment region can be provided and the wall's support at the foundation may be analyzed as fixed if it can be shown that the ultimate soil pressures acting on the foundation can provide a resisting moment equal the ultimate dynamic moment capacity of the wall cross section at the base of the wall.

Figure 6-7 (+) and Figure 6-8 (+) illustrate the calculation of the resisting moment provided by the foundation at the bottom of a reinforced masonry wall using soil

parameters intended to represent a medium strength soil and a typical range of foundation dimensions. These calculated soil resisting moments can be compared for reference to the ultimate dynamic moment capacity of an 8 inch CMU wall reinforced at midthickness with a 5/8 inch reinforcing steel, which is 11,400 lb-in/in. This comparison indicates that cohesive soils are more likely to provide the necessary moment resistance to cause fixity at the bottom of a reinforced masonry wall than granular soil.

The resisting moment from cohesive soil in Figure 6-7 (+) is calculated using Brom's method to determine lateral soil pressure. The resisting moment from granular soil in Figure 6-8 (+) is calculated using Rankine's method to determine lateral soil pressures. Other design-based methodologies commonly used for lateral design of foundation systems or finite-element methods validated against data may also be used.

6-7.4.4 Framing and Shear Wall Considerations.

Masonry walls can function in the overall building system as load-bearing components or as non-load bearing components. In the latter case, the walls can be continuous in front of the supporting frame members or infill walls placed in the same plane as the frame between supporting frame members. The supporting frame can be a flexible type framing, such as structural steel framing, or more rigid framing, such as reinforced concrete frames. Figure 6-9 (+) illustrates these masonry support systems. Frame rigidity is important for infill masonry walls since it influences the amount of compression membrane response that can occur in masonry walls, as discussed in Section 6-7.5.

Masonry walls can also act within a building system as shear walls. If the shear wall is exterior, it will nearly simultaneously resist directly applied blast loads and shear loads from the roof and floor diaphragms. In this case, the wall should have sufficient shear capacity to resist the combined out-of-plane shear force and in-plane shear force from the floor and roof diaphragms caused by blast loading as discussed in Section 6-7.3.4.

6-7.5 Compression and Tension Membrane Capacity.

Compression membrane response can only develop if there is a tight fit or very small gap (i.e. less than approximately 0.25 inch) between an infill masonry wall and surrounding rigid frame (e.g. infill walls surrounded by a heavy reinforced concrete frame). The amount of gap for infill walls can vary considerably depending on the construction. The walls can be built "tight" within the surrounding frame or there can be an intentional gap allowing the beam overhead to deflect without bearing on the wall below and for thermal expansion of the wall. Shrinkage of the wall may also increase the gap between the infill wall and surrounding frame. The amount of compression membrane response is very sensitive to the gap dimension and to the quality of the mortar between the masonry units and framing component. The use of compression membrane is not recommended for design due to general uncertainties in the actual gap dimension between the wall and surrounding building framing, the rigidity of the frame, and in quality of the mortar adjacent to the framing.

Tension membrane response can develop in reinforced masonry walls at large deflections if there is: 1) fully developed reinforcing bars throughout the span and into the supports; and 2) supports with adequate in-plane rigidity for one-way responding walls. The bars will not remain fully developed throughout the span if composite action between the grout and reinforcing steel deteriorates at high steel strains. Sufficient testing has not been performed to develop specific design and detailing requirements for masonry walls to provide tension membrane resistance during response to blast loads. Also, boundary conditions that allow tension membrane response are not typical in reinforced masonry wall construction. Thus, membrane action may develop in reinforced masonry walls with adequate supports and reinforcing details, but design approaches verified with blast test data are not available.

In summary, tension and compression membrane action should not typically be considered in the design or analysis of masonry walls for explosives safety applications.

6-7.6 Dynamic Analysis.

The principles for dynamic analysis of structural components subject to blast loads presented in Chapter 3 of this document apply to blast analyses of masonry walls. Therefore, the dynamic response of masonry walls can be modeled using an equivalent SDOF system. The SDOF system consists of a mass-spring system with a mass that is defined by the wall mass and a load-mass factor, and a spring that is defined by a resistance-deflection relationship representing the response of the wall to the blast load (i.e. typically a uniform pressure loading). The wall mass is calculated based on the wall weight and the load-mass factor is determined based on the wall boundary conditions and associated deflected shape of the wall from blast load as discussed in Section 3-7.

The resistance-deflection relationship for flexural response is described in Chapter 3. This approach should be used to determine the resistance-deflection relationship for masonry walls. The ultimate dynamic moment capacity and moment of inertia for the wall should be determined as discussed in Sections 6.8 and 6.9 for reinforced and unreinforced masonry walls, respectively. At deflections greater than the yield deflection causing the ultimate flexural resistance, the response of reinforced masonry walls may be considered ductile (i.e. constant resistance equal to the ultimate flexural resistance with increasing deflection), while the response of unreinforced masonry walls is considered brittle and the flexural resistance goes to zero. Unreinforced masonry walls develop additional resistance at deflections greater than the yield deflection from the effects of in-plane axial force, including self-weight, which cause arching response described in Section 6-9. Given the one-story construction limitation in Section 6-7.1, the axial compression load on a masonry wall typically is low enough compared to the wall's axial load capacity that the wall's flexural design may ignore combined axial and flexure loads.

The ultimate support shear, V_u, should be calculated at each support for the wall as discussed in Section 3-15. The wall's connections to the supporting frame should be designed to resist the ultimate shear at the support and the wall's shear capacity should

be designed to resist the ultimate shear at the support or at a distance d from the support as discussed in Section 6-7.3.4.

6-7.7 Response Criteria.

The maximum deflection from the dynamic response is used to calculate a support rotation, as described in Chapter 3, which is compared to the maximum acceptable response criteria for reinforced and unreinforced masonry in Table 6-3 (+) for the required Protection Category, as defined in Chapter 1. The deflection to thickness ratio must also meet the requirements in Table 6-3 for unreinforced masonry. These response criteria are based on ductile flexural reinforced masonry response and brittle unreinforced masonry response with axial load arching, as described in Sections 6.8 and 6.9.

Table 6-3 Response Criteria for Masonry Components

Wall Type	Support Rotation (Degrees)		Deflection to Thickness Ratio	
	Protection Category 1	Protection Category 2	Protection Category 1	Protection Category 2
Steel Reinforced Masonry	2.0	6.0	N/A	N/A
Unreinforced Masonry*	1.5	4.0	0.5	0.8
*Only applicable for brittle flexural response followed by compression membrane or axial load arching.				

6-7.8 Rebound.

After reaching its initial maximum dynamic deflection, a masonry wall typically will deflect back in the opposite direction of the applied blast load (i.e. rebound). This causes a stress reversal in the wall and reaction forces that are in the opposite direction compared to the inbound response. Reinforcing steel located at the center of a masonry wall will resist both inbound and rebound stresses. Otherwise, new masonry walls should be symmetrically reinforced at each face. Unreinforced masonry walls should be analyzed assuming they have no flexural resistance and only axial load arching during rebound unless the inbound displacement was less than the flexural yield deflection, X_e (see Section 6-9.2 and Figure 6-13 (+)). The response limits in Section 6-7.7 also apply during rebound. Masonry wall connections to their supports should resist the ultimate support shear for rebound response.

6-8 REINFORCED MASONRY WALLS.

6-8.1 General Requirements and Construction Procedures.

Reinforced masonry walls are designed to resist blast load in a similar manner as reinforced concrete walls, except that the walls must comply with construction requirements and reinforcement steel detailing provisions of TMS 402/ACI 530/ASCE 5.

The amount of composite action between the reinforcing steel and masonry is very dependent on the workmanship during wall construction including the grout placement, since the grout transfers the tension strength of the reinforcing steel into the wall. This has been demonstrated in blast test programs on reinforced masonry walls, where walls with careful inspection during construction demonstrated significantly greater blast resistance than walls with no inspection (Oswald, et al 2006). Full composite action is necessary for reinforced masonry to develop a ductile resisting moment based on the dynamic tensile yield strength of reinforcement and the compression strength of the masonry, as assumed for blast design.

All blast resistant reinforced masonry walls should be subject to inspection and material testing during construction as required in Chapter 1 of TMS 402/ACI 530/ASCE 5 for essential facilities (i.e. Level C Quality Assurance). This requirement helps ensure that the reinforcing steel and surrounding grout will be constructed to act compositely with the surrounding masonry before and after yielding of the steel and that there are no voids in solid grouted walls that are intended to provide protection from fragments. Procedures that inhibit full composite action include insufficient vibrating during placement, improper reinforcing steel placement too near an edge of the grouted space, mortar protrusion and droppings into the grouted space, and grout with insufficient strength or plasticity. Additionally, both vertical and horizontal reinforcement should be accurately positioned during wall construction and rigidly secured at intervals by wire ties or spacing devices. The distance between reinforcement and the masonry unit must not be less than ¼-inch for fine grout or ½-inch for course grout.

6-8.2 Ultimate Flexural Moment Capacity.

The ultimate dynamic moment capacity used to calculate the resistance of reinforced masonry walls is shown in Equation 6-9. This equation assumes that reinforced masonry will respond in essentially the same manner to blast loading as reinforced concrete. The applicability of this assumption has been demonstrated in numerous static tests and blast tests on well constructed reinforced masonry walls.

$$M_u = \frac{A_s f_{dy}}{b}\left(d - \frac{a}{2}\right) \qquad \text{6-9}$$

$$\text{where} \quad a = \frac{A_s f_{dy}}{0.8 b f'_{dm}}$$

where:

M_u = *dynamic ultimate moment capacity per unit width*
A_s = *area of tension reinforcement in width, b*
f_{dy} = *dynamic design stress*
d = *effective depth (distance from the extreme compression fiber to the centroid of the tension reinforcement)*

b = *spacing between reinforcement*
f'_{dm} = *masonry prism dynamic compressive strength*

6-8.3 Reinforcing Steel Limitations.

The maximum bar size for primary vertical reinforcing steel in new construction is a No. 6 bar. There is also a limit of one bar per cell at each face of the masonry (i.e. no bundled bars). The purpose for these limitations is to encourage the use of more distributed reinforcement, rather than the use of a smaller number of larger bars. This requirement also helps to limit the demand on the grout to provide composite action between the reinforcement and masonry through large plastic deflections. Dynamic flexural response may be considered for existing walls with larger bar sizes if it can be shown that the masonry and grout can develop the full dynamic yield strength of the bars out to the maximum wall deflection calculated in the dynamic analysis of the wall response to the applied blast load.

Minimum and maximum values for the amount of steel reinforcement for blast design are shown in Table 6-4 (+). The minimum steel ratio for primary steel in the table is based on the requirement in TMS 402/ACI 530/ASCE 5 for beams that the minimum steel ratio should cause a moment capacity that exceeds 1.3 times the masonry cracking moment, assuming that the dynamic modulus of rupture for masonry equals 200 psi and the dynamic reinforcing steel yield strength is 77 ksi. The maximum steel ratio is based on a conservative, historical value from the Unified Building Code of one-half the balanced steel ratio, assuming a dynamic prism strength of 2380 psi and a dynamic yield strength of 77 ksi for the reinforcing steel. This is less than the maximum steel ratio in TMS 402/ACI 530/ASCE 5, but blast testing shows that more ductility is available in reinforced masonry walls with lower steel ratios (Oswald et al, 2006). The minimum horizontal joint reinforcement is required to provide confinement around splices and distribute loads into the vertical reinforcing steel. Horizontal reinforcement should also be used as required around openings to distribute blast loads into primary vertical flexural steel and to resist conventional loads (e.g. in lintel beams over openings).

The maximum spacing for primary vertical reinforcement is 3 times the nominal wall thickness for partially grouted walls and 6 times the nominal wall thickness for solid or fully grouted walls. The minimum spacing for primary vertical reinforcement in CMU walls is one bar per cell (or one bar at each face within a cell for nominal 12 inch thick CMU walls). Primary vertical reinforcement placed in voids between composite wythes of walls shall have a minimum spacing of 1.5 times the bar diameter, and not less than 1.5 inches. The maximum and minimum spacing for secondary horizontal joint reinforcement is 16 inches and 8 inches, respectively.

6-8.4 Splices and Development of Reinforcement.

Reinforcement should have a minimum splice length and development length, l_d, as required in TMS 402/ACI 530/ASCE 5, including the material reduction factor (i.e. φ factor). The reinforcing steel and masonry dynamic material strengths should be used to calculate the development length. All splices should be located in regions of low stress (i.e. no more than 75% of the maximum moment) and should be specified on the structural drawings to help ensure that splices are placed as intended. Additionally, splice lengths must be increased 30% if there are bars at each face of a cell (four per cell at splice locations) or if any of the bars are within 3 inches of each other. CMU walls with one layer of spliced reinforcement (i.e. at mid-thickness) should have at least a nominal thickness of 8 inches to help provide sufficient grout in the cells around spliced reinforcing steel. CMU walls with spliced reinforcement at each face should have at least a nominal thickness of 12 inches for the same reason. Non-contact splices are not allowed. Mechanical splices are allowed as permitted in Section 4-21.8.

Table 6-4 Minimum and Maximum Steel Ratios for Reinforced Masonry Components

Case	Reinforcement Area (A_s) Limitation[1]
Minimum steel ratio for primary steel (vertical steel)	$A_s \geq 0.0006bd$
Maximum steel ratio for primary steel (vertical steel)	$A_s \leq 0.005bd$
Minimum secondary steel (horizontal joint reinforcement)	Two longitudinal W1.7 wires in bed joints at every other course (16 inches)
Note 1: See Equation 6-9 for definition of terms	

Figure 6-10 (+) shows a reinforced CMU wall with spliced reinforcing bars. This figure shows two layers of reinforcement, but a single layer of reinforcement at midthickness is much more typical. Reinforced CMU walls are typically spliced at approximately 4 ft to 5 ft height intervals in traditional low-lift wall construction, where the grout is placed by hand in the reinforced cells with a maximum pour height of 5 ft. The need to keep splices out of maximum moment regions may prevent the use of splices at the top of each grout pour and cause larger reinforcing steel lengths and associated block lift heights unless “A” or “H” blocks are used (see **Figure** 6-1 (+)), which is permitted.

Alternatively, high lift grout placement may be used according to the requirements of TMS 402/ACI 530/ASCE 5, which allows much longer lengths of unspliced reinforcement. The wall is built up to 24 ft high, or higher in some cases, clean-out cells are provided at the bottom of the wall, and grout is placed with a pump from the top of each reinforced cell. In the cases of both low-lift and high-lift construction techniques, inspection and quality assurance are essential to obtain composite action between the steel reinforcement and masonry as assumed for blast design.

6-8.5 Moment of Inertia.

The flexural stiffness of a reinforced masonry component should be based on the average of the cracked moment of inertia and the net, uncracked moment of inertia using Equation 6-10. This is an approximate approach that is not based on measurements of the actual cracking that occurs during dynamic blast response, but is consistent with the approach recommended for reinforced concrete in Section 4-15. This approach has been assumed in previous comparisons where the dynamic deflections calculated in SDOF analyses using Equation 6-10 compared well, on the average, to measured values (Oswald et al, 2006). The importance of the moment of inertia is often reduced by the fact that most wall deflection typically occurs after yielding of the flexural reinforcing steel, when the wall stiffness is assumed equal to zero in the SDOF analysis methodology, so that most of the dynamic deflection is not affected by the moment of inertia. The cracked moment of inertia can be calculated using a simplified approach in Equation 6-11, or it can be calculated with the methodology for reinforced concrete in Section 4-15 using E_m from Equation 6-2 in place of the modulus of elasticity for concrete (E_c). For solid masonry units, the value of I_n is equal to the moment of inertia of the gross section. Values of I_n for ungrouted or partially grouted CMU can be determined using information in Section 6-7.2.1.

$$I_a = \frac{I_n + I_c}{2} \qquad \text{6-10}$$

where:

I_a = *the average moment of inertia for the net section and cracked section (in^4/in)*
I_n = *the moment of inertia of the net masonry section (in^4/in) (see Equation 6-1)*
I_c = *the moment of inertia of the cracked masonry section (in^4/in) (see Equation 6-11)*

$$I_c = 0.005\, d^3 \qquad \text{6-11}$$

where:

d = *effective depth (distance from the extreme compression fiber to the centroid of the tension reinforcement)*
b = *spacing between reinforcement*

6-9 UNREINFORCED MASONRY WALLS.

Unreinforced masonry walls may not be used for new construction. The adequacy of existing unreinforced masonry walls may be evaluated in accordance with Section 6-7. Accordingly, these walls may not be placed in tension and must satisfy the shear (diagonal tension) and direct shear requirements of Sections 6-7.3.4 and 6-7.3.5,

respectively. Similarly, the direct spalling, breach, and penetration resistance of fully grouted unreinforced masonry walls may be evaluated in accordance with Sections 6-7.3.6 and 6-7.3.7.

Per Section 6-7.3.3, existing unreinforced masonry walls may be used to resist far-range blast loading only. Procedures for analyzing the flexural response of these walls are provided in Sections 6-9.1 and 6-9.2. These walls have very limited ductility so the resistance-deflection relationship is based on brittle flexural response. However, these walls have some additional lateral load resistance and a significant amount of additional strain energy (i.e. area under the resistance-deflection curve) after brittle flexural failure from axial load arching caused by self weight and any supported axial load. Accordingly, the resistance-deflection curve for an existing unreinforced CMU wall may include axial load arching, determined in accordance with Section 6-9.2, if the wall is in good condition and laterally supported to resist the ultimate support shear as described in Section 6-7. Axial load arching is caused by applied axial load, and it is therefore different from compression membrane response where in-plane support rigidity causes much higher axial loads to develop in walls. The moment of inertia for unreinforced masonry is equal to the net moment of inertia for the masonry cross section, I_n, which can be determined using information in Section 6-7.2.1.

6-9.1 Brittle Flexural Response.

Equation 6-12 shows the ultimate dynamic moment capacity of unreinforced masonry walls based on the dynamic modulus of rupture strength of the wall. Values for the elastic section modulus can be determined for CMU as discussed in Section 6-7.2.1. The dynamic flexural tension strength of masonry should be calculated as discussed in Section 6-7.3.3. The dynamic moment capacity is used to determine the ultimate flexural resistance of the wall. The flexural stiffness is calculated using the gross, or net moment of inertia as discussed in Section 6-7.2.1.

$$M_{du} = S\left(f_{dt} + \frac{P}{A}\right) \qquad \text{6-12}$$

where:

M_{du} = *ultimate dynamic moment capacity*
f_{dt} = *dynamic modulus of rupture strength of masonry wall*
S = *elastic section modulus of masonry unit*
P = *compressive load per unit width along wall*
A = *cross sectional area per unit width along wall*

6-9.2 Axial Load Arching.

For the general case where there is no compression membrane response, the resistance of an unreinforced masonry wall will reduce suddenly immediately after the wall resistance reaches the ultimate flexural resistance due to the brittle nature of the tensile bond between the mortar and masonry in the maximum moment regions. The wall will then develop axial load arching, which is characterized by a much lower resistance than flexural response, and a much larger deflection to failure. This provides a significant increase in the strain energy and blast load capacity of unreinforced masonry walls, although the wall is still a weak component against blast load. An example of the resistance-deflection curve for an unreinforced masonry wall with brittle flexural response followed by axial load arching is shown in Figure 6-11 (+). Note that the axial load is an applied load, and is therefore different from compression membrane response that depends on the in-plane rigidity of the supports to develop axial load. The applied axial load should only include the supported dead load.

Figure 6-12 (+) illustrates the mechanics of axial load arching. As significant rotation occurs at midspan and at the supports after brittle flexural failure, the axial load is resisted at the unloaded face or the wall near the supports and at the loaded face near midspan. The resulting in–plane axial force couple (i.e. axial load arching) resists lateral load. The peak magnitude of the resisting couple, equal to R_a in Equation 6-13, is a function of the applied axial load, including component self-weight above midspan, and the component thickness. Note that the axial load from self weight in Equation 6-13 is assumed to act along the same line of action as the axial load, P, in Figure 6-12 when, in fact, it acts along a line of action through the center of gravity of the wall. This is a simplification that is supported by comparisons of SDOF analysis using Equation 6-13 to measured response of unreinforced masonry walls with axial load from self-weight (Oswald, 2005). The ultimate resistance and stiffness for flexural response used to calculate X_e in Equation 6-13 are calculated using methods in Chapter 3. Non-load bearing walls have axial load arching due only to axial load from their self-weight.

$$r_a = \frac{8}{L^2}\left(T - 2X_e\right)\left(P + \frac{wL}{2}\right) \quad \text{where} \quad X_e = \frac{r_u}{K_e} \qquad \text{6-13}$$

where:

r_a= *maximum resistance from axial load effects*
X_e = *deflection at ultimate flexural resistance*
T = *overall wall thickness*
P = *compressive axial load width along wall*
w = *areal self-weight and supported weight of wall*
L = *span length equal to wall height*
r_u = *ultimate flexural resistance of wall (see Section 6-9.1)*
K_e = *elastic unit stiffness of wall (or equivalent elastic stiffness for walls with*

indeterminate supports)

Figure 6-13 (+) shows the resistance-deflection relationship for unreinforced masonry with brittle flexural response and axial load arching. All resistance is due to flexural response until flexural yielding has occurred at all maximum moment regions and the component becomes a mechanism (i.e. at a deflection X_e in Figure 6-13). At deflections between $2X_e$ and the component thickness, h, in Figure 6-13 (+), all resistance is due to axial load arching. The resistance-deflection relationship transitions between these two responses modes in Figure 6-13 (i.e. between X_e and 2 X_e) at an assumed slope slightly less than the elastic stiffness. The load-mass factor is based on elastic flexural response, as discussed in Section 3-7, for the wall response up to the deflection at ultimate flexural resistance, X_e. The load-mass factor is based on plastic flexural response, as discussed in Section 3-7, for the response at all larger deflections, where the wall has cracked at the maximum moment region(s), and is assumed to have the same deflected shape it has after yielding at all maximum moment regions. For two-way spanning walls, axial load arching acts only in the vertical span direction.

6-9.3 Unreinforced Multi-Wythe Walls.

Multi-wythe walls are generally designed to deflect together in a non-composite manner for conventional loads using ties to transfer load from the outer wythe to the inner wythe, as discussed in Section 6-7.3. For existing unreinforced masonry multi-wythe walls where it can be shown that the tie anchors will allow the outer wall to transfer load to the inner wall without failing according to the requirements in Section 6-7.3, the wall system can be analyzed as multiple walls responding together in flexure in a non-composite manner analogous to a system of springs in parallel arrangement responding to a load. All the walls deflect equally, causing the system of walls to have a total flexural stiffness equal to the summed stiffnesses of all walls and to resist the applied blast load in proportion to their relative flexural stiffnesses. This is consistent with the approach recommended in TMS 402/ACI 530/ASCE 5.

The walls are assumed to resist lateral load in this manner until the wall with the highest stresses yields in tension at all maximum moment locations to become a mechanism. The combined flexural resistance of all the walls when this occurs is the ultimate brittle flexural resistance of the multi-wythe wall system. Each wall must resist its ultimate support shear based on its maximum resistance.

After peak flexural response, the multi-wythe wall system can have axial load arching. The peak resistance from axial load arching is calculated separately for each wall and summed to determine the total peak axial load arching resistance for the wall system (i.e. R_a in Figure 6-13 (+)). The axial load arching resistance is assumed to decrease linearly to zero resistance at a deflection equal to the average wythe thickness, or to the thickness of the wythe providing the largest axial load arching resistance, whichever is less.

The response of a multi-wythe wall system .3with adequate connectors between wythes analyzed in this manner will only increase significantly if the two wythe thicknesses are nearly equal. For example, if the ratio of wythe thicknesses in a two-wythe wall system is equal to 2.0, the value of ultimate flexural resistance of the two-wythe system will only be 1.125 times greater than that for thicker wythe. This contrasts sharply with the case of a system with two equal wythe thicknesses, where the ultimate flexural resistance of the wall system is 2.0 times greater than the resistance of either wythe./**1**/

Figure 6-1 Typical Masonry Unit Shapes

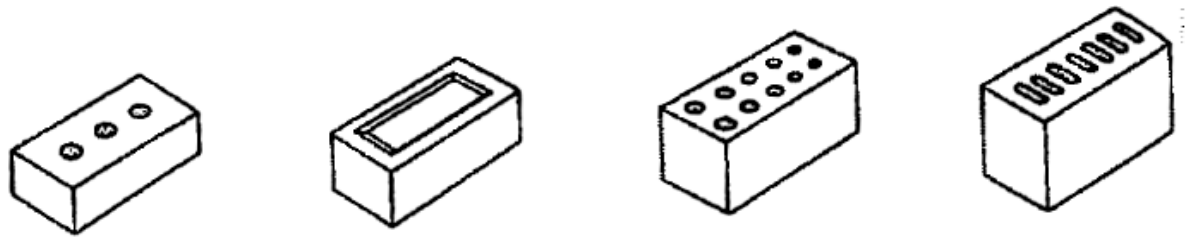

Various Brick Shapes

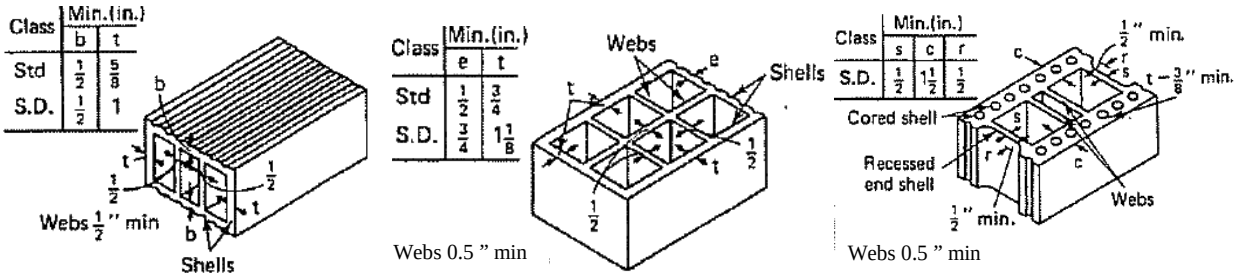

Various Clay Tile Shapes

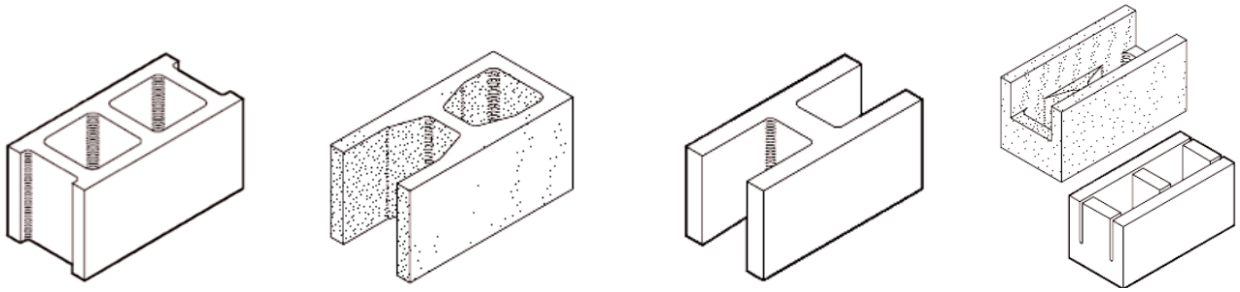

Stretcher Unit | Open End, or “A” Shaped Unit | Double Open End Unit, or “H” Shaped Unit | Bond Beam Units

CMU Block Shapes

Figure 6-2 Typical Reinforced Masonry Construction

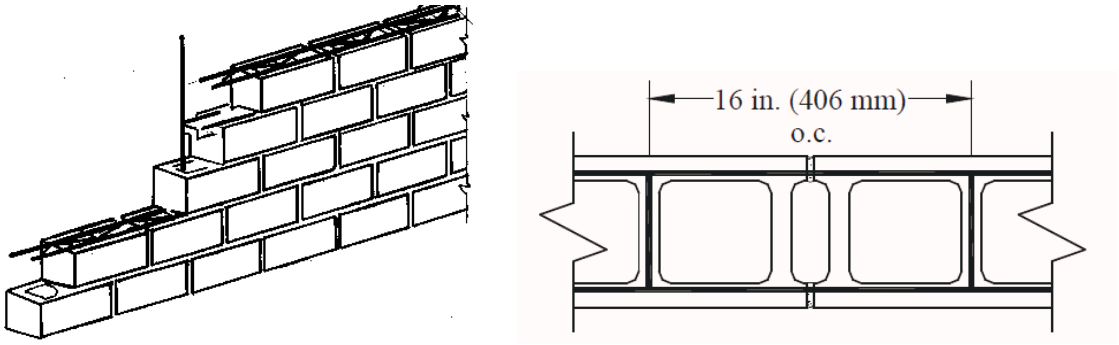

Reinforced CMU Construction with Primary Vertical Reinforcement and Seconday Horizontal Joint Reinforcement

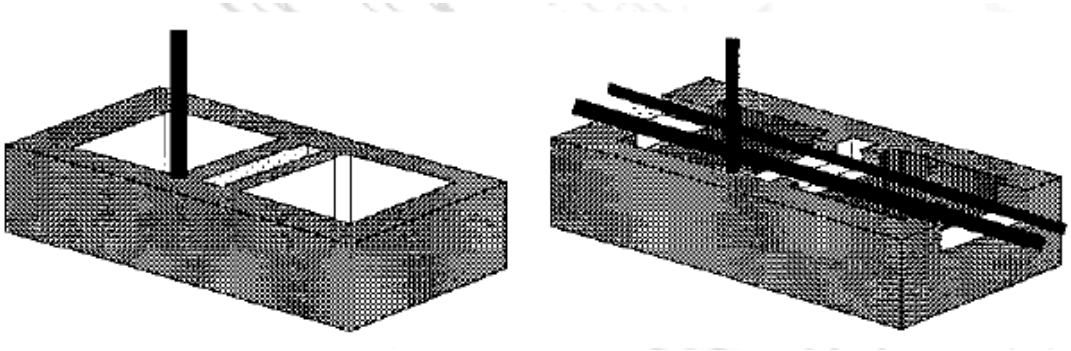

Typical Clay Tile with Vertical Reinforcing Steel and Bond Beam with Horizontal Reinforcing Steel (CMU Similar)

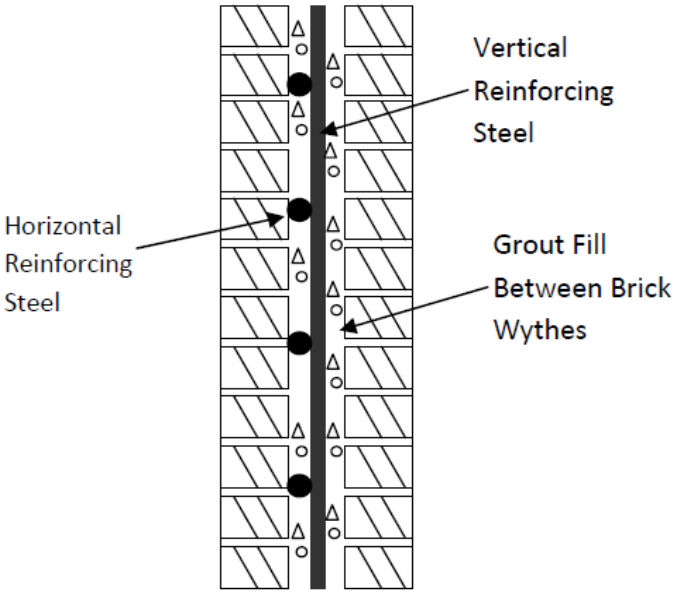

Reinforced Brick Construction

Figure 6-3 Double Wythe Cavity Wall with Brick and CMU

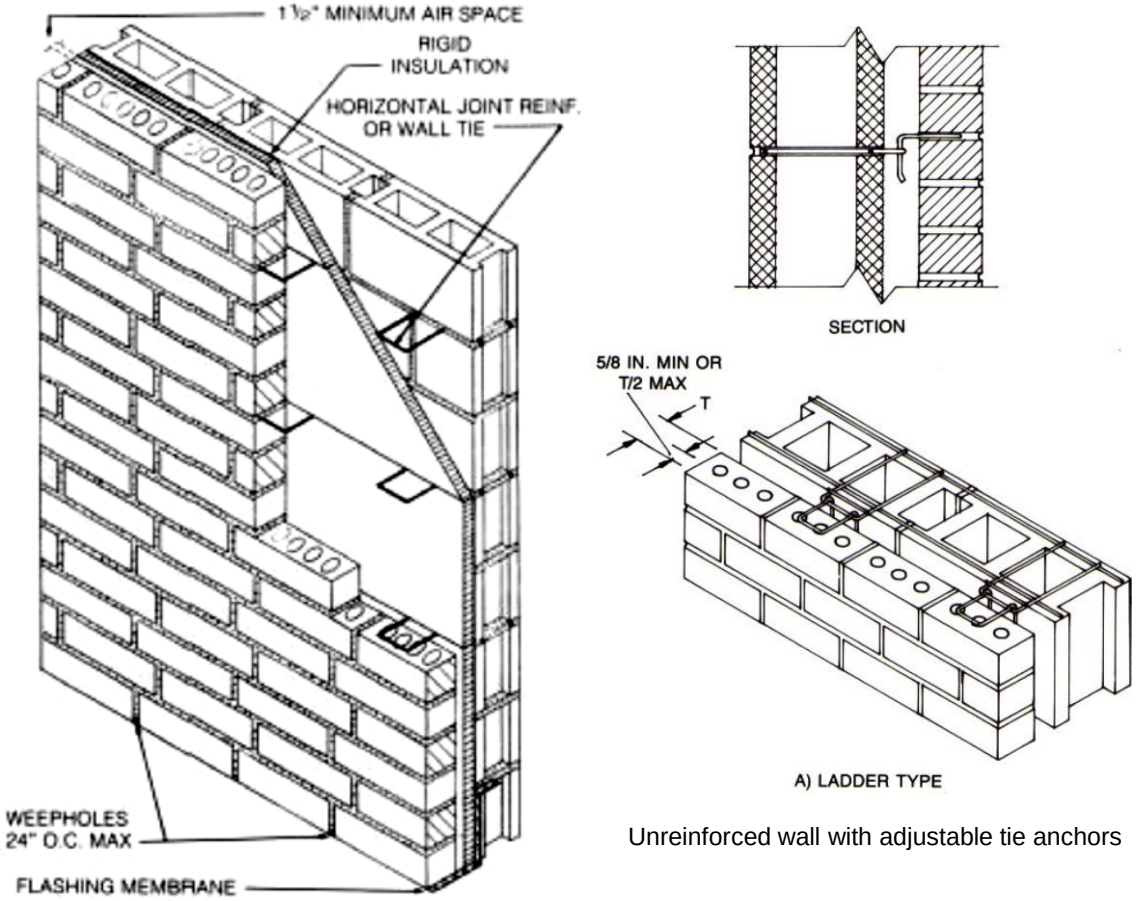

Unreinforced wall with adjustable tie anchors

Figure 6-4a Conventional Masonry Wall Connections to Flexible Supports

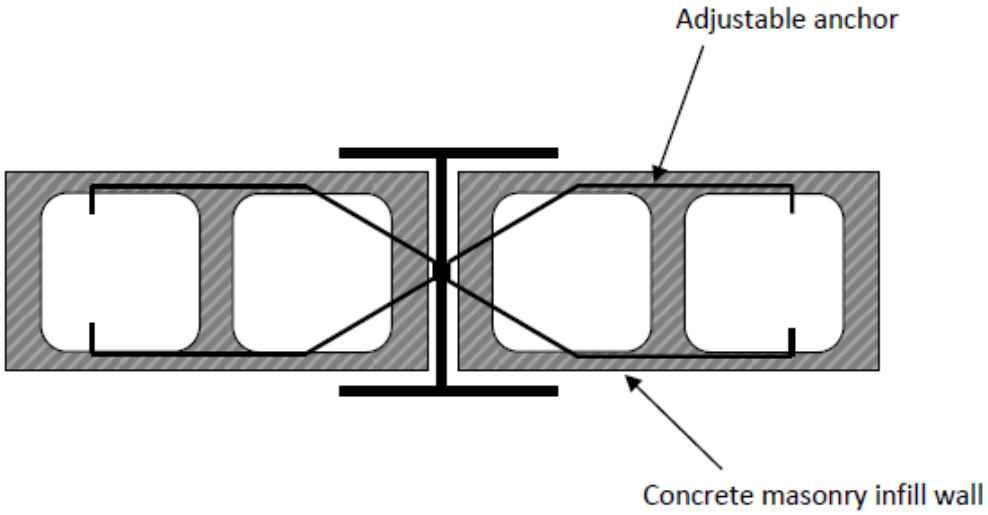

Anchor for In-fill Masonry Wall

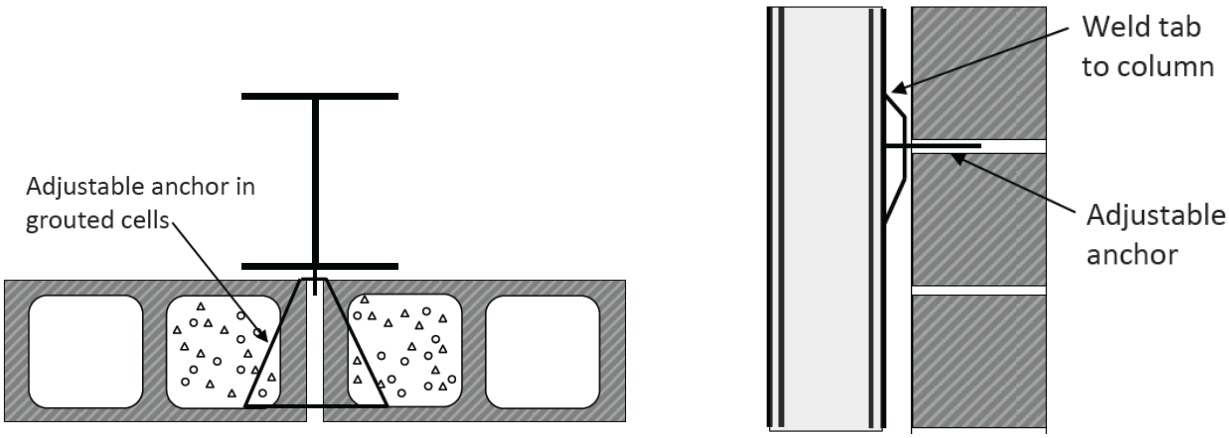

Horizontal Cross Section

Vertical Cross Section

Anchor for Masonry Wall in Outside Steel Frame

Figure 6-4b Conventional Infill Masonry Wall Connections to Rigid Supports

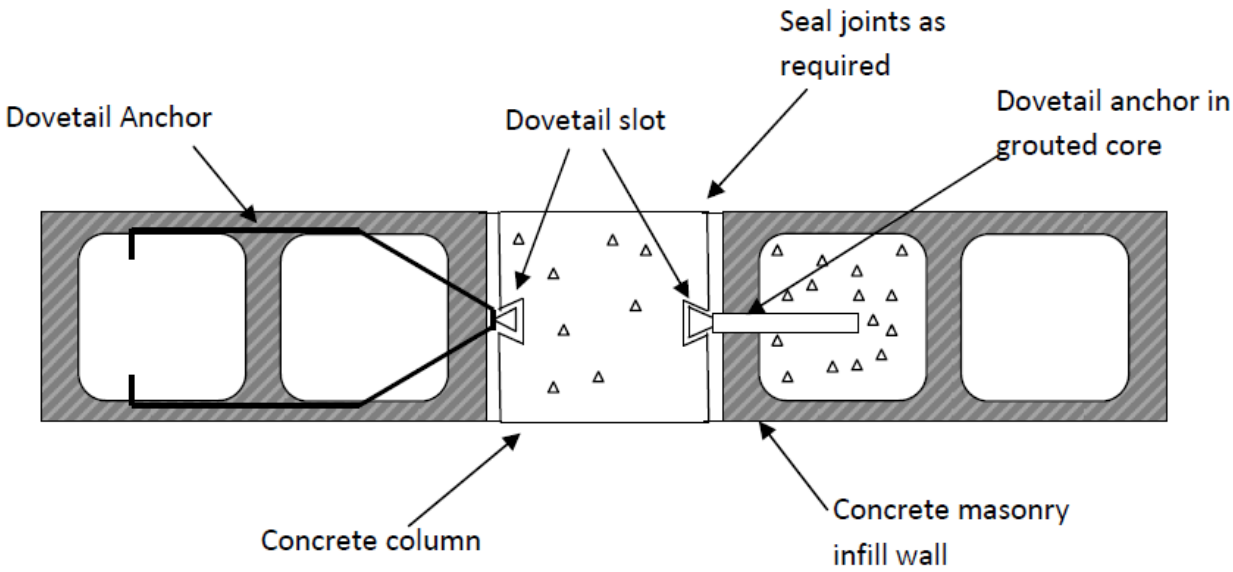

Infill Wall Connections to Columns

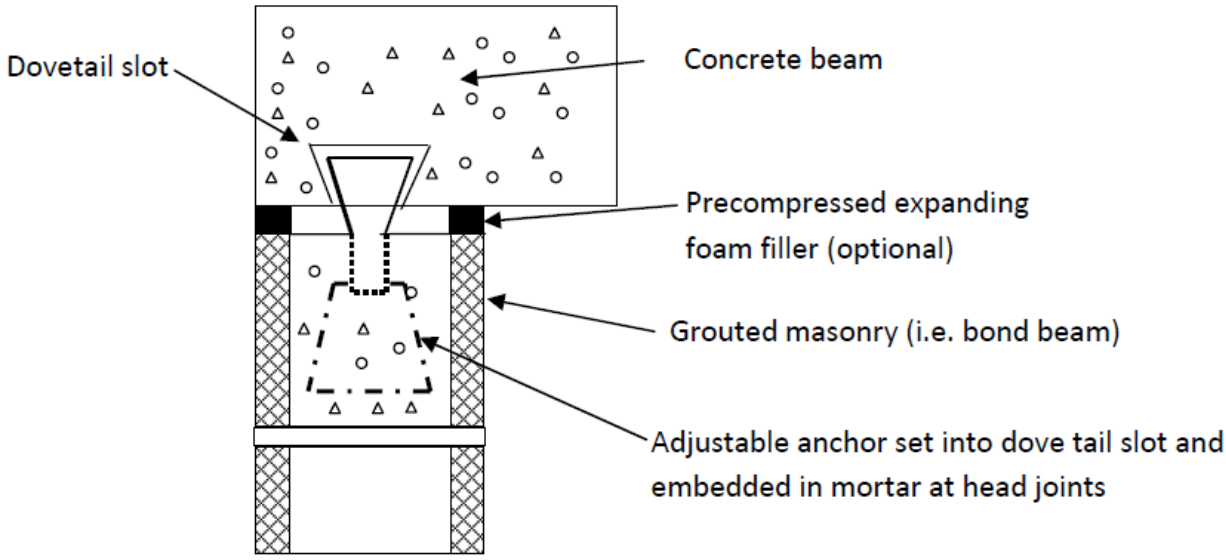

Infill Wall Connection to Overhead Beam

Figure 6-5 Examples of Blast-Resistant Connections

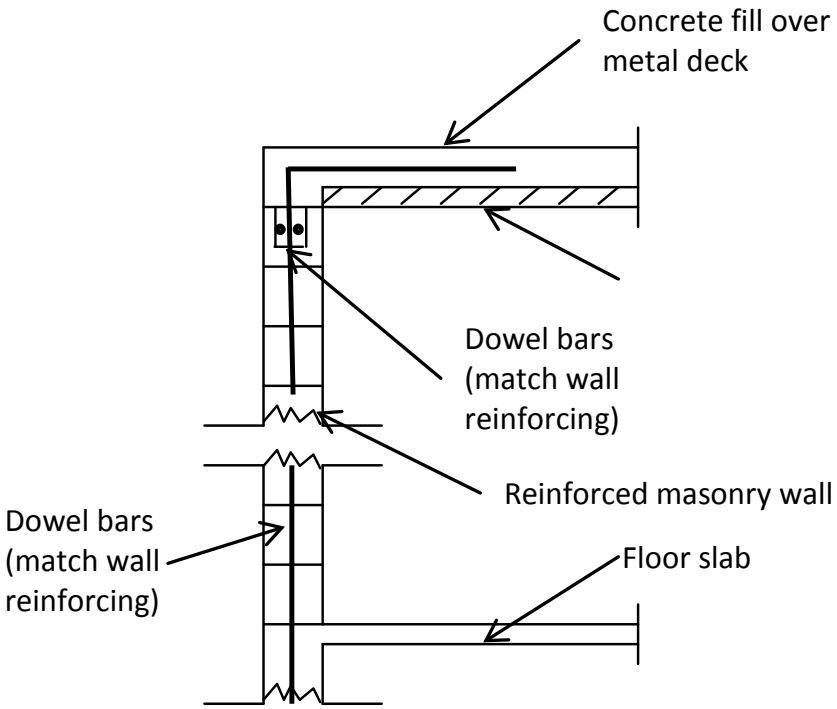

Dowel connections to foundation and concrete roof deck

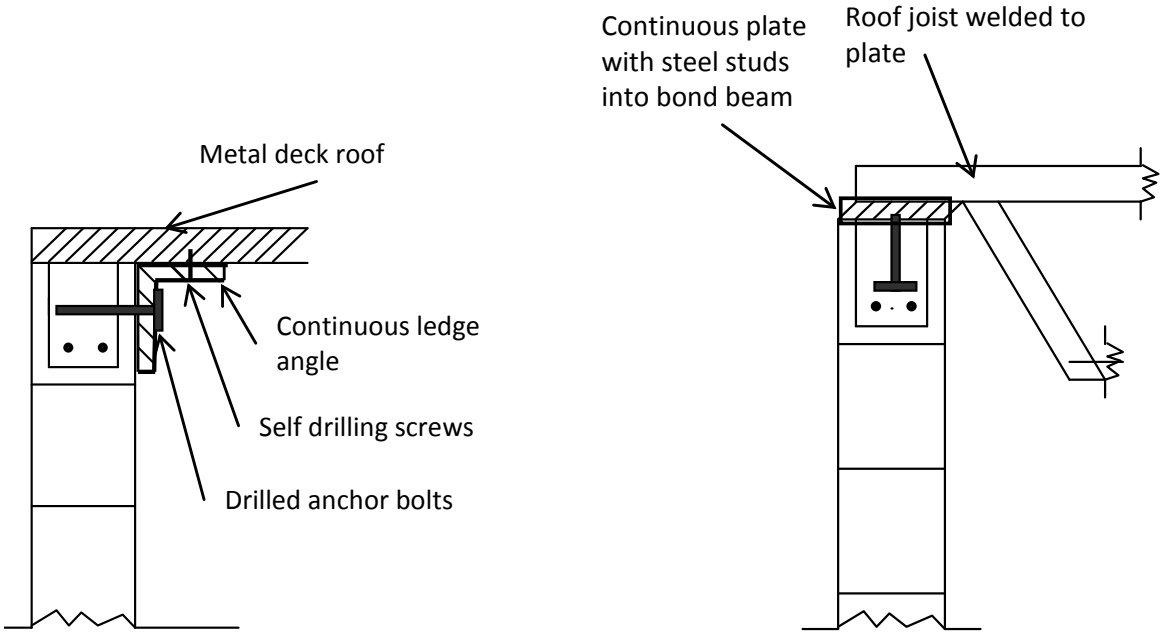

Connections at top of wall to metal roof deck roof system

Figure 6-6 Typical Reinforced Masonry Wall Detail at Foundation

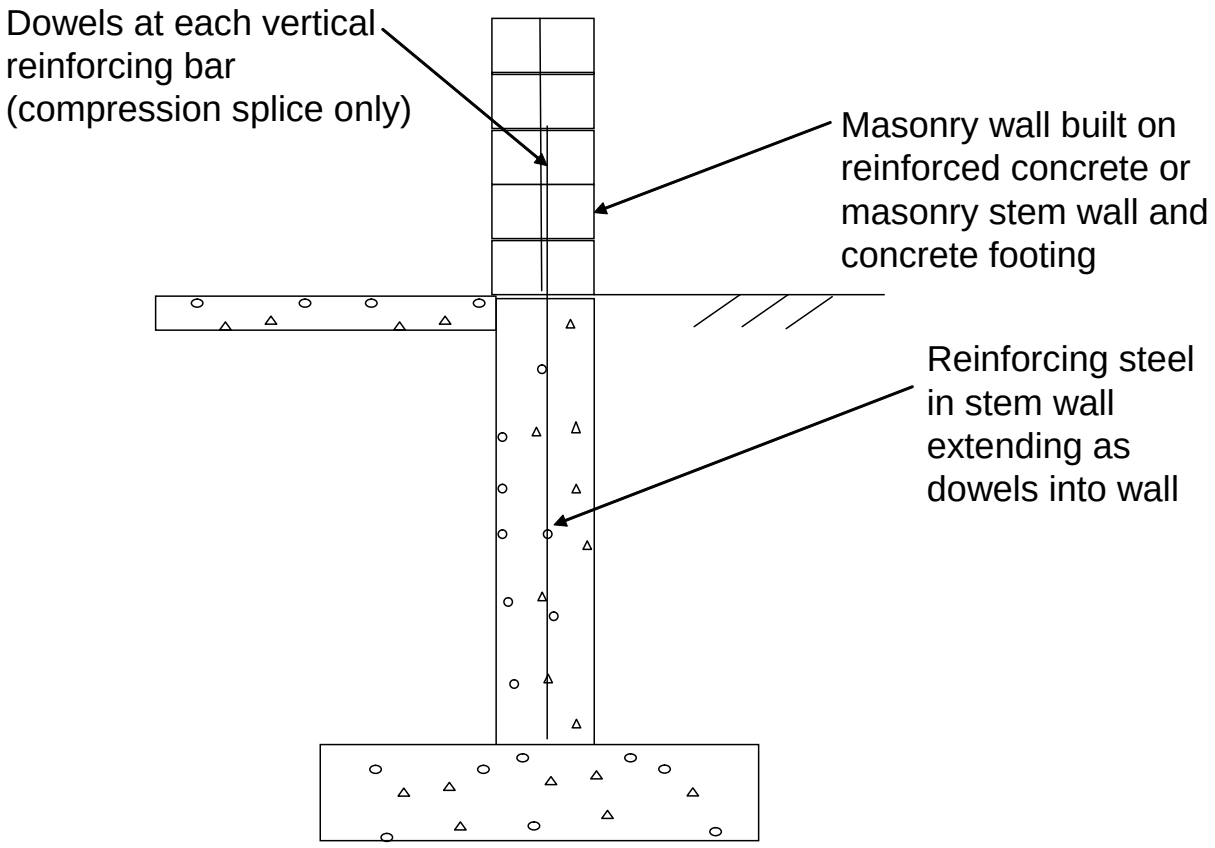

Figure 6-7 Resisting Moment Provided to Foundation in Cohesive Soil

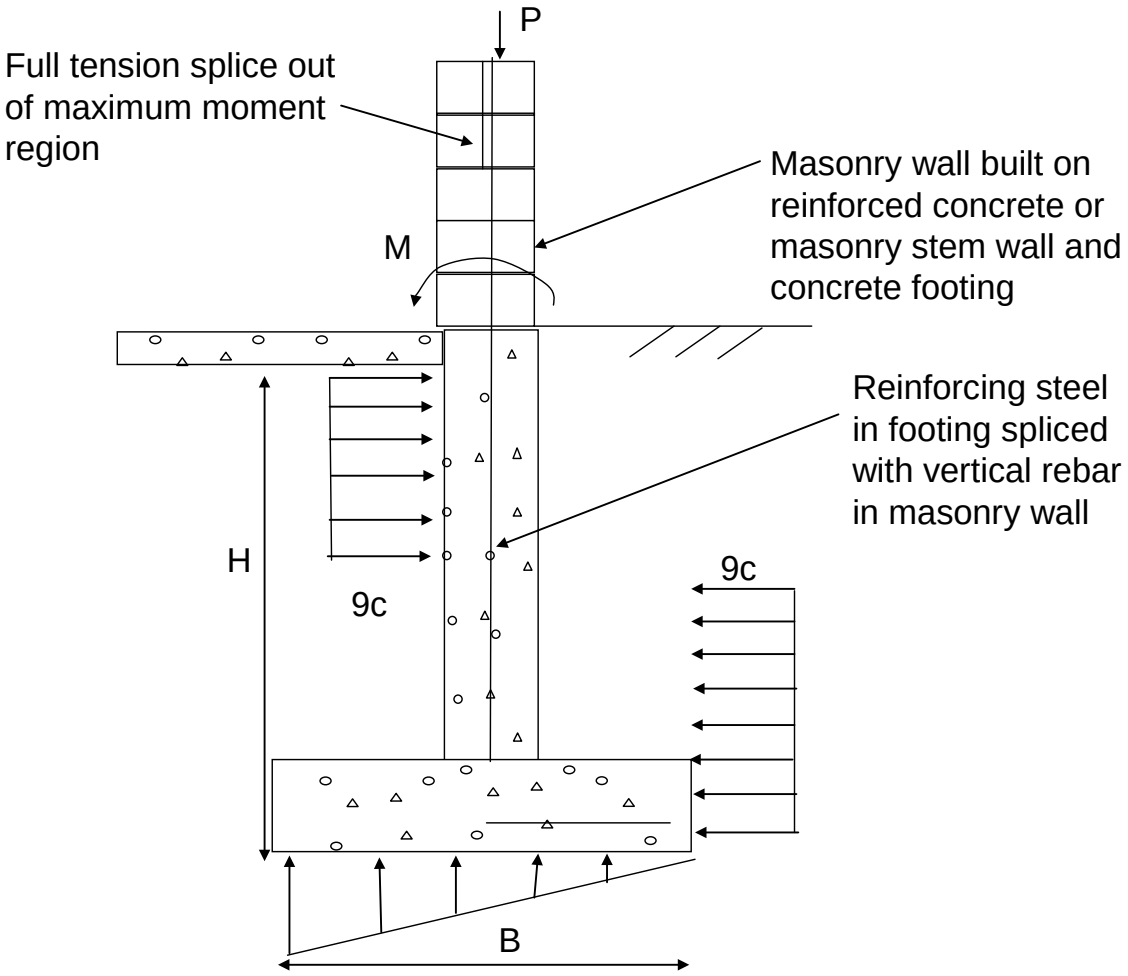

Height (H) (ft)	Cohesion (c) (psf)	Axial Load (P) (lb/in)	Width (B) (ft)	Resisting Moment lb-in/in
6	1000	35	5	64030
4	1000	35	4	28820
4	500	35	4	14810

Figure 6-8 Resisting Moment Provided to Foundation in Granular Soil

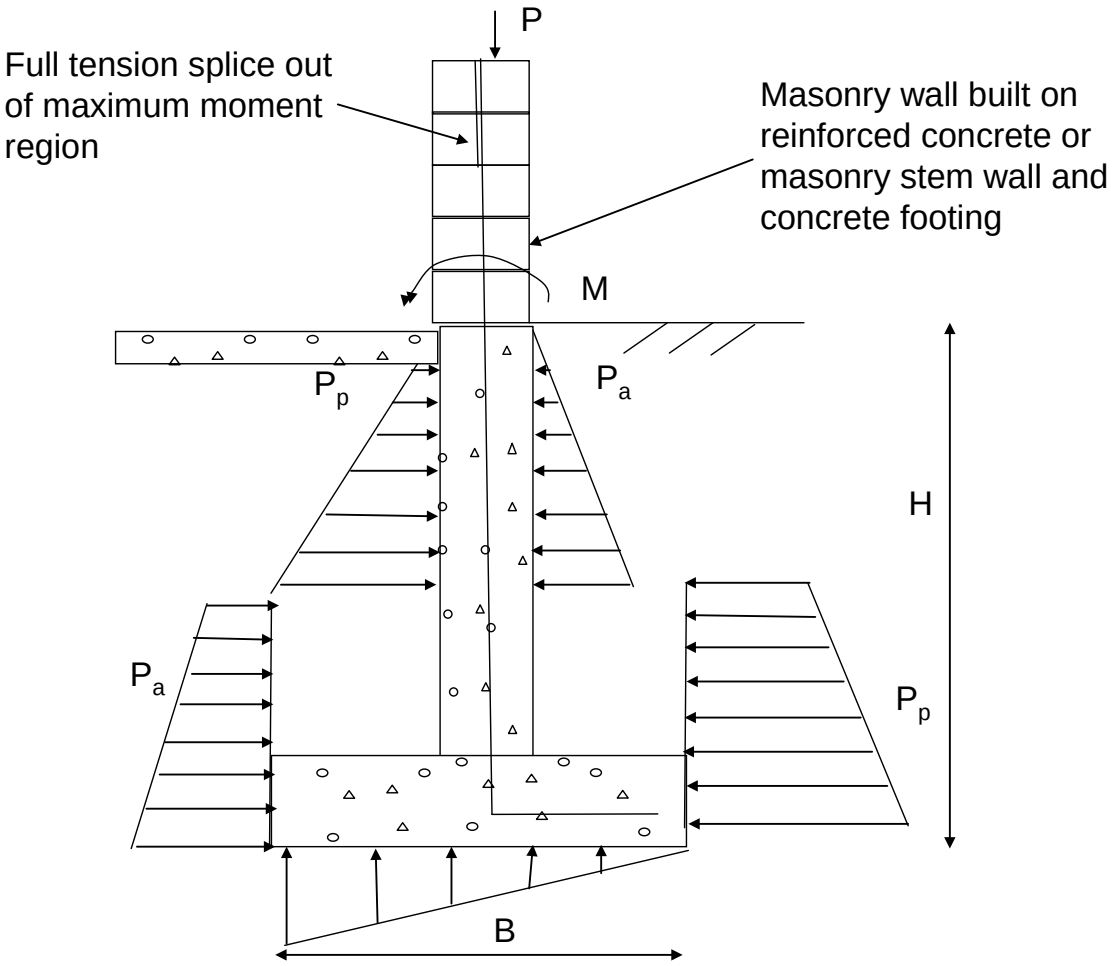

Height (H) (ft)	Angle of Friction (Deg.)	Coefficients of Soil Pressure		Soil Unit weight (pcf)	Axial Load (P) (lb/in)	Width (B) (ft)	Resisting Moment lb-in/in
		Passive (K_p)	Active (K_a)				
6	30	3	0.33	95	35	5	6650
4	30	3	0.33	95	35	4	2400

Figure 6-9 Frame Supports for Masonry Walls

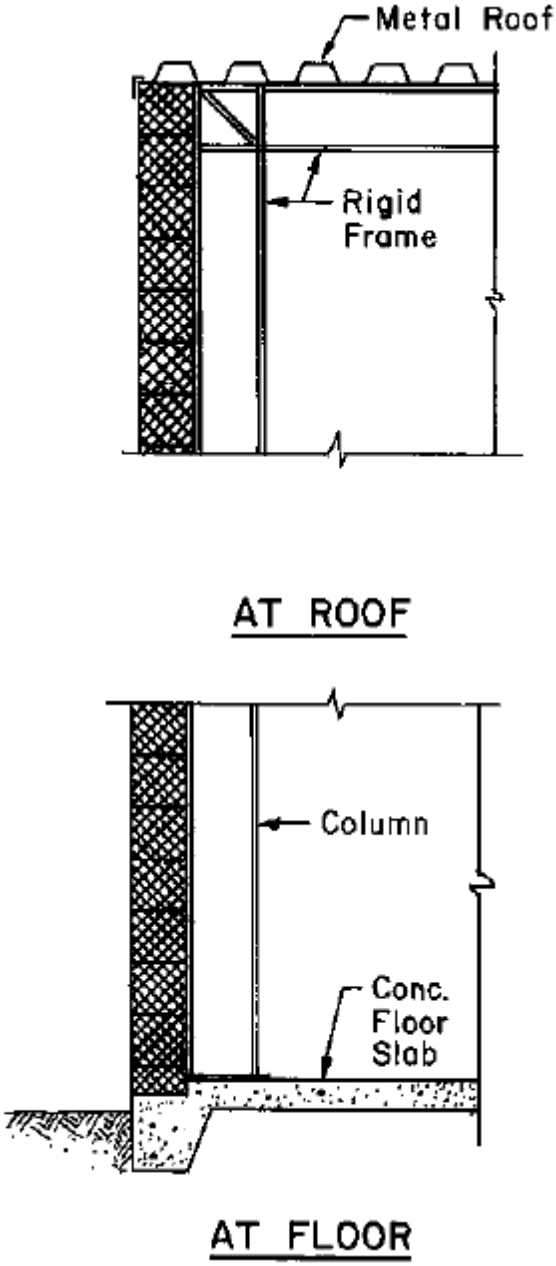

Masonry Wall Supported by Flexible Frame

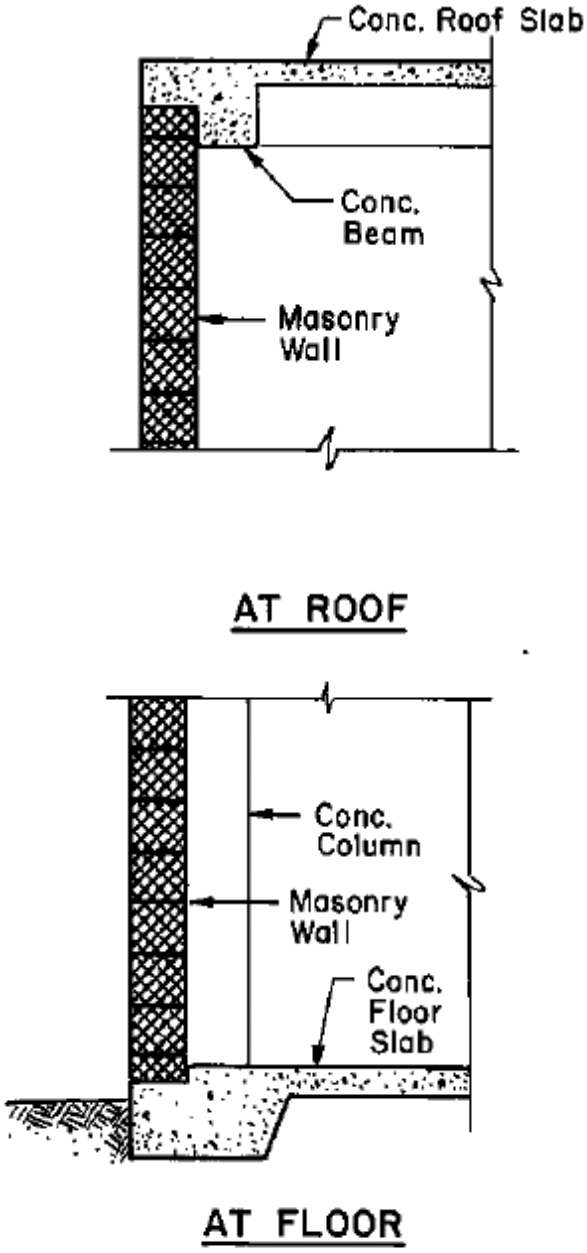

Masonry Wall Supported by Rigid Frame

Figure 6-10 Typical Reinforced Masonry Wall with Splices and Low Lift Grouting

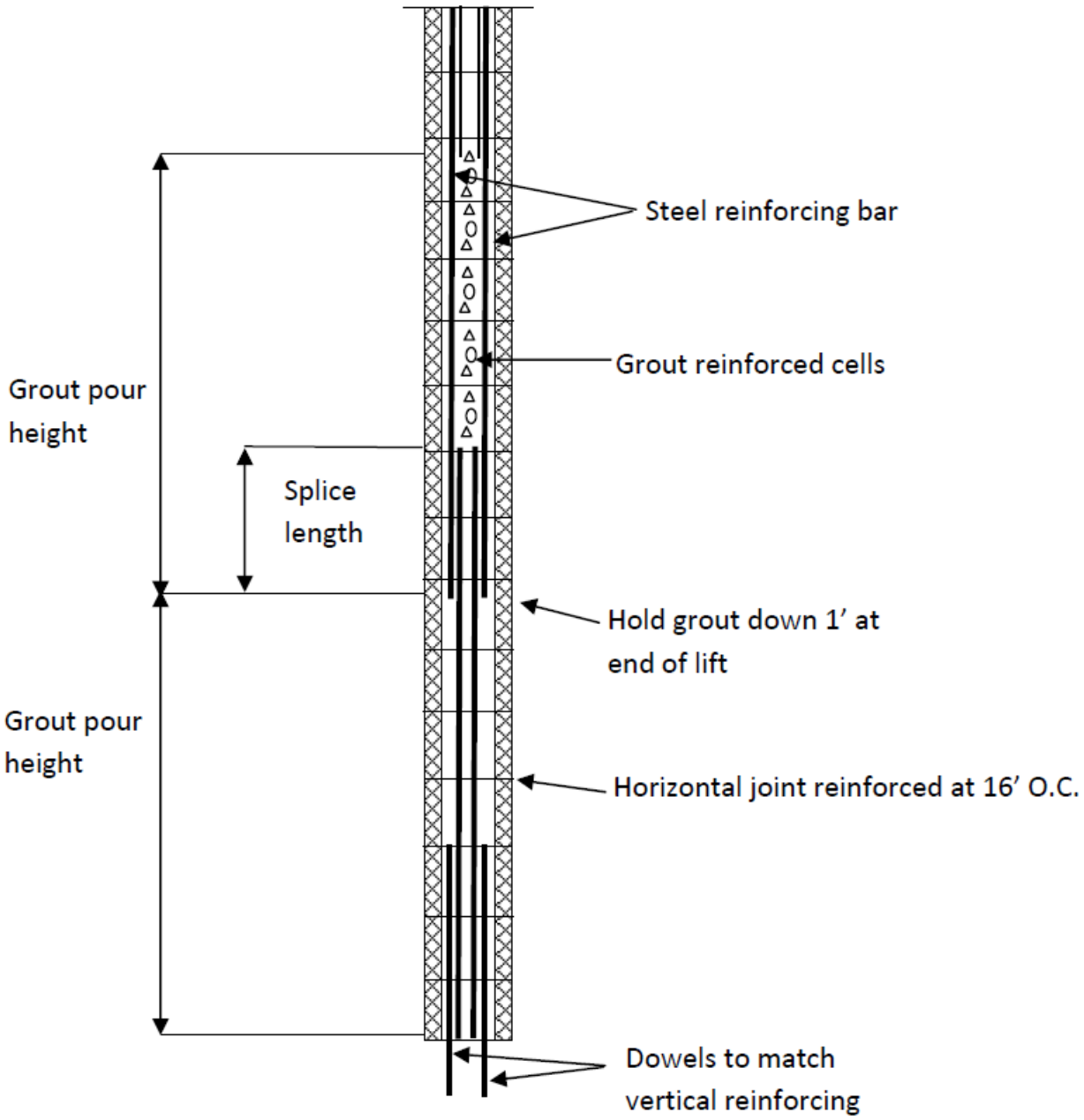

Figure 6-11 Resistance-Deflection Curve for Unreinforced Masonry Wall with Axial Load Arching

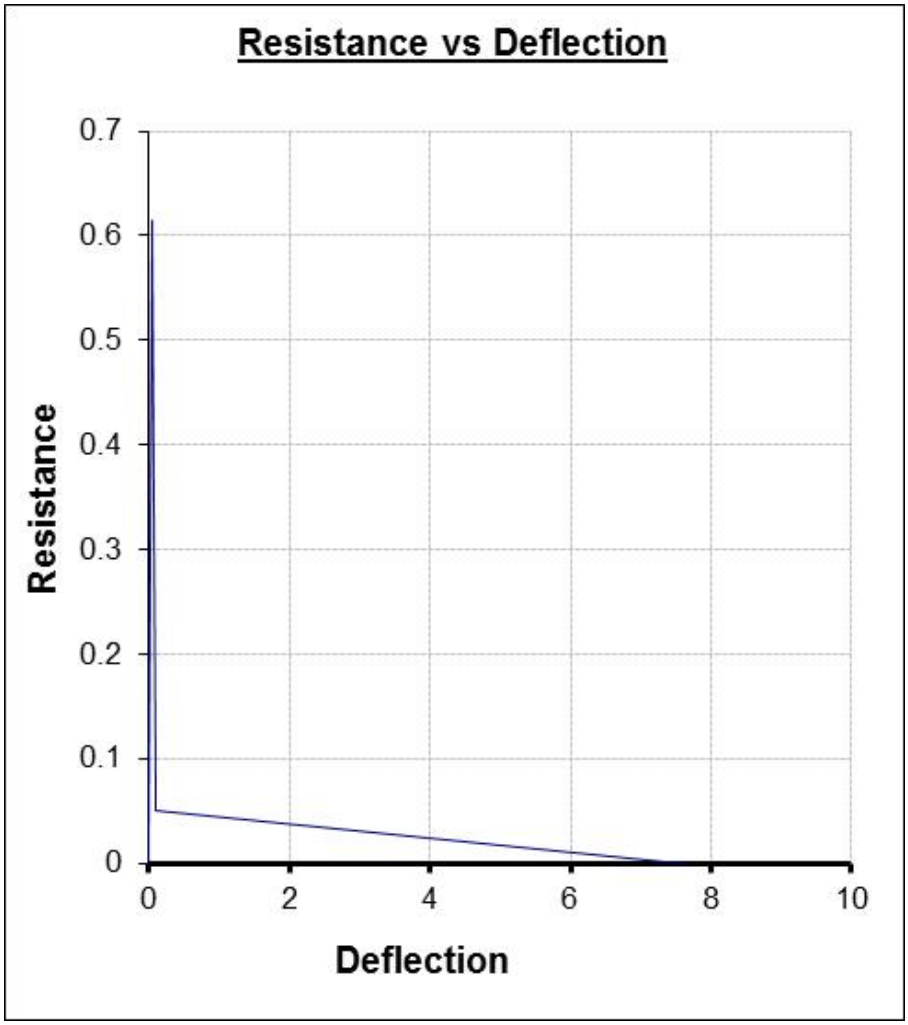

Figure 6-12 Axial Load Arching in Unreinforced Masonry Walls

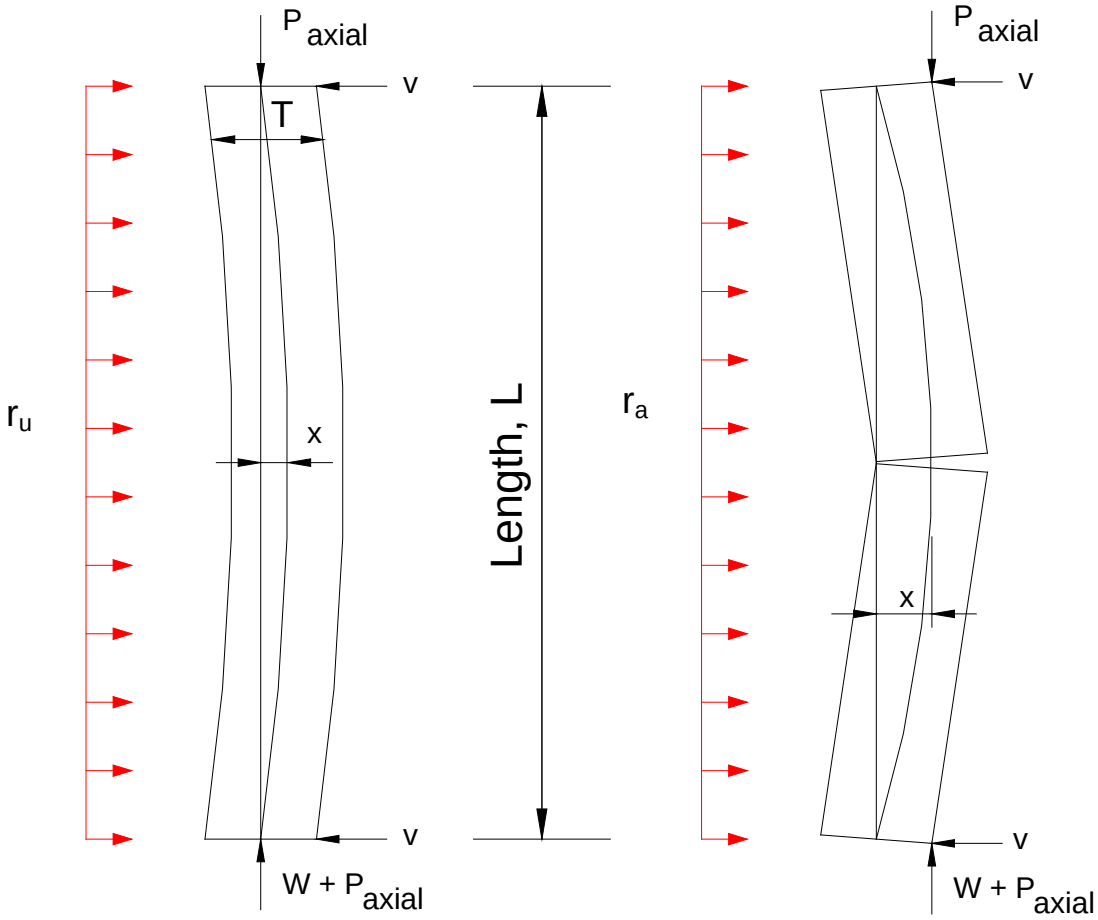

Response prior to ultimate flexural resistance, r_u

Response after r_u with axial load arching

Figure 6-13 Detailed Resistance-Deflection Curves for Unreinforced Masonry Wall with Axial Load Arching

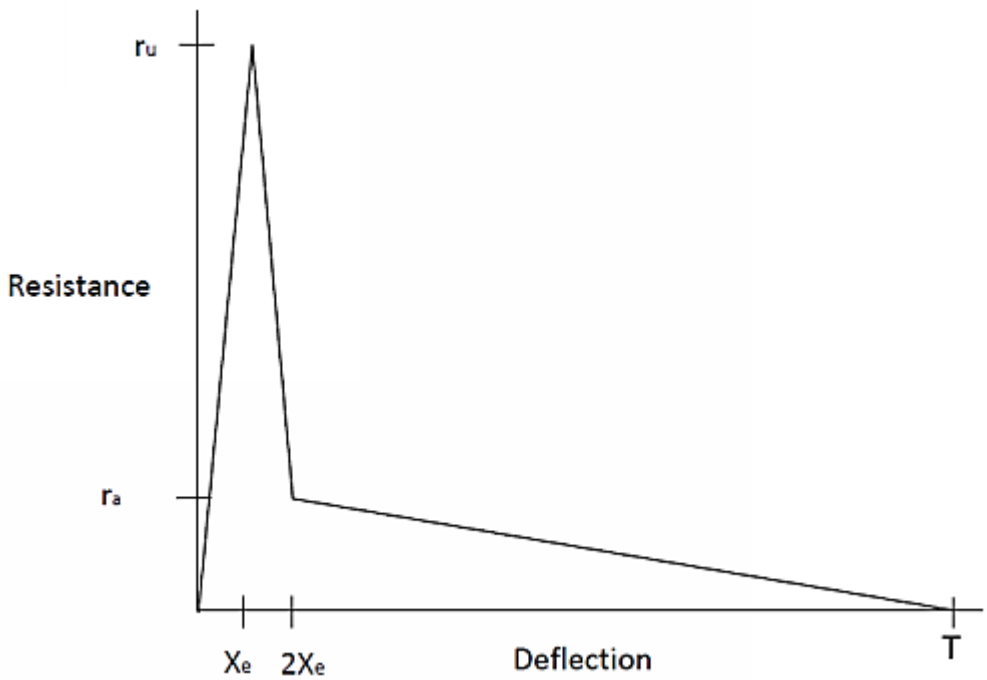

Term in Figure 6-13	Definition
r_u	Ultimate flexural resistance
r_a	Maximum resistance from axial load arching (see Equation 6-13)
X_e	Yield deflection at ultimate flexural resistance based on elastic stiffness or equivalent elastic stiffness for indeterminate component
T	Wall thickness

PRECAST CONCRETE

6-10 APPLICATIONS.

Precast concrete construction can consist of either prestressed or conventionally reinforced members. Prestressing is advantageous in conventional construction, for members subjected to high flexural stresses such as long span or heavily loaded slabs and beams. Other advantages of precast concrete construction include: (1) completion time for precast construction will be significantly less than the required for cast-in-place concrete, (2) precast construction will provide protection against primary and secondary fragments not usually afforded by steel construction and (3) precast work is generally more economical than cast-in-place concrete construction especially when standard precast shapes can be used. The overriding disadvantage of precast construction is that the use of precast members is limited to buildings located at relatively low pressure levels of 1 to 2 psi. For slightly higher pressure levels, cast-in-place concrete or structural steel construction becomes the more economical means of construction. However, for even higher pressures, cast-in-place concrete is the only means available to economically withstand the applied load.

Precast structures are of the shear wall type, rigid frame structures being economically impractical (see the discussion of connections, Section 6-16 below). Conventionally designed precast structures may be multi-story, but for blast design it is recommended that they be limited to single story buildings. Some of the most common precast sections are shown in Figure 6-14 (+). The single tee and double tee sections are used for wall panels and roof panels. All the other sections are beam and girder elements. In addition, a modified flat slab section will be used as a wall panel around door openings. All of the sections shown can be prestressed or conventionally reinforced. In general though, for blast design, beams and roof panels are prestressed, while columns and wall panels are not. For conventional design, prestressing wall panels and columns is advantageous in tall multi-story building, and thus of no benefit for blast resistant design which uses only single story buildings. In fact, in the design of a wall panel, the blast load is from the opposite direction of conventional loads and hence prestressing a wall panel decreases rather than increases the capacity of section.

6-11 STATIC STRENGTH OF MATERIALS.

6-11.1 Concrete.

Generally the minimum compressive strength of the concrete, f_c, used in precast elements is 4000 to 5000 psi. High early-strength cement is usually used in prestressed elements to ensure adequate concrete strength is developed before the prestress is introduced.

6-11.2 Reinforcing Bars.

Steel reinforcing bars are used for rebound and shear reinforcement in prestressed members as well as for flexural reinforcement in non-prestressed members. For use in

blast design, bars designated by the American Society for Testing and Materials (ASTM) as A615 and A706, Grade 60, are recommended. As only small deflections are permitted in precast members, the reinforcement is not stressed into its strain hardening region and thus the static design strength of the reinforcement is equal to its yield stress (f_y = 60,000 psi). A strength increase factor *SIF* of 1.1 is permitted.

6-11.3 Welded Wire Reinforcement.

Welded wire reinforcement, designated as A1064 by ASTM, is used to reinforce the flanges of tee and double tee sections. In conventional design welded wire reinforcement is sometimes used as shear reinforcement, but it is not used for blast design, which requires closed ties. The static design strength f_m, of welded wire reinforcement is equal to its yield stress, 65,000 psi.

6-11.4 Prestressing Tendons.

There are several types of reinforcement that can be used in prestressing tendons. They are designated by ASTM as A 416, A 421 or A 722, with A 416, grade 250 or grade 270, being the most common. The high strength steel used in these types of reinforcement can only undergo a maximum elongation of 3.5 to 4 percent of the original length before the ultimate strength is reached. Furthermore, the high strength steel lacks a well defined yield point, but rather exhibits a slow continuous yielding with a curved stress-strain relationship until ultimate strength is developed (see Figure 6-15 (+)). ASTM specifies a fictitious yield stress f_{py}, corresponding to a 1 percent elongation. The minimum value of f_{py} depends on the ASTM designation, but it ranges from 80 to 90 percent of the ultimate strength, f_{pu}.

6-12 DYNAMIC STRENGTH OF MATERIALS.

Under the rapid rate of straining of blast loads, most materials develop higher strengths than they do when statically loaded. An exception, is the high strength steel used in prestressing tendons. Researchers have found that there was very little increase in the upper yield stress and ultimate tensile strengths of high strength steels under dynamic loading.

The dynamic design strength is obtained by multiplying the static design strength by the appropriate dynamic increase factor *DIF*, which is as follows:

(a)	Concrete:	Compression	DIF = 1.19
		Diagonal tension	DIF = 1.00
		Direct shear	DIF = 1.10
		Bond	DIF = 1.00

(b) Non-prestressed Steel Reinforcement

Flexure	DIF = 1.17
Shear	DIF = 1.00

(c) Welded Wire Reinforcement[1] DIF = 1.10

(d) Prestressed Reinforcement DIF = 1.00

Note 1: Not permitted for primary reinforcement

6-13 ULTIMATE STRENGTH OF PRECAST ELEMENTS.

The ultimate strength of non-prestressed precast members is exactly the same as cast-in-place concrete members and as such is not repeated here. For the ultimate strength of non-prestressed precast elements, see Chapter 4 of this manual.

6-13.1 Ultimate Dynamic Moment Capacity of Prestressed Beams.

The ultimate dynamic moment capacity M_u of a prestressed rectangular beam (or of a flanged section where the thickness of the compression flange is greater than or equal to the depth of the equivalent rectangular stress block, *a*) is as follows:

$$M_u = A_{ps} f_{ps} (d_p - a/2) + A_s f_{dy} (d-a/2) \qquad 6\text{-}14$$

and

$$a = \frac{\left(A_{ps} f_{ps} + A_s f_{dy}\right)}{0.85 f'_{dc}\, b} \qquad 6\text{-}15$$

where:

M_u = *ultimate moment capacity*
A_{ps} = *total area of prestress reinforcement*
f_{ps} = *average stress in the prestressed reinforcement at ultimate load*
d_p = *distance from extreme compression fiber to the centroid of the prestressed reinforcement*
a = *depth of equivalent rectangular stress block*
A_s = *total area of non-prestressed tension reinforcement*
f_{dy} = *dynamic design strength of non-prestressed reinforcement*
d = *distance from extreme compression fiber to the centroid of the non-prestressed reinforcement*
f'_{dc} = *dynamic compressive strength of concrete*
b = *width of the beam for a rectangular section or width of the compression flange for*

a flanged section

The average stress in the prestressed reinforcement at ultimate load f_{ps} must be determined from a trial-and-error stress-strain compatibility analysis. This may be tedious and difficult especially if the specific stress-strain curve of the steel being used is unavailable. In lieu of such a detailed analysis, the following equations may be used to obtain an appropriate value of f_{ps}:

For members with bonded prestressing tendons:

$$f_{ps} = f_{pu}\left\{1 - \frac{\gamma_p}{\beta_1}\left[p_p \frac{f_{pu}}{f'_{dc}} + \frac{df_{dy}}{d_p f'_{dc}}(p - p')\right]\right\} \qquad \text{6-16}$$

and

$$p_p = A_{ps} / bd_p \qquad \text{6-17}$$

$$p = A_s / bd \qquad \text{6-18}$$

$$p' = A_s' / bd \qquad \text{6-19}$$

where:

f_{pu} = *specified tensile strength of prestressing tendon*
γ_p = *factor for type of prestressing tendon*
= *0.40 for* $f_{py} / f_{pu} \geq 0.80$
= *0.28 for* $f_{py} / f_{pu} \geq 0.90$
f_{py} = *"fictitious" yield stress of prestressing tendon corresponding to a 1 percent elongation*
$ß_1$ = *0.85 for* f'_{dc} *up to 4000 psi and is reduced 0.05 for each 1000 psi in excess of 4000 psi*
p_p = *prestressed reinforcement ratio*
p = *ratio of non-prestressed tension reinforcement*
p' = *ratio of compression reinforcement*
A_s = *total area of compression reinforcement*

If any compression reinforcement is taken into account when calculating f_{ps} then the distance from the extreme compression fiber to the centroid of the compression reinforcement must be less than $0.15d_p$ and

$$p_p \frac{f_{pu}}{f'_{dc}} + \frac{df_{dy}}{d_p f'_{dc}}(p - p') \geq 0.17 \qquad 6\text{-}20$$

If there is no compression reinforcement and no non-prestressed tension reinforcement, Equation 6-16 becomes:

$$f_{ps} = f_{pu}\left[1 - \frac{\gamma_p}{\beta_1} p_p \frac{f_{pu}}{f'_{dc}}\right] \qquad 6\text{-}21$$

For members with unbonded prestressing tendons and a span-to-depth ratio less than or equal to 35:

$$f_{ps} = f_{se} + 10{,}000 + f'_{dc}/(100p_p) \leq f_{py} \qquad 6\text{-}22a$$

and

$$f_{ps} \leq f_{se} + 60{,}000 \qquad 6\text{-}22b$$

where:

f_{se} = *effective stress in prestressed reinforcement after allowances for all prestress losses*

For members with unbonded prestressing tendons and a span-to-depth ratio greater than 35:

$$f_{ps} = f_{se} + 10{,}000 + f'_{dc}/(300\, p_p) \leq f_{py} \qquad 6\text{-}23a$$

and

$$f_{ps} \leq f_{se} + 30{,}000 \qquad 6\text{-}23b$$

To insure against sudden compression failure the reinforcement ratios for a rectangular beam, or for a flanged section where the thickness of the compression flange is greater than or equal to the depth of the equivalent rectangular stress block will be such that:

$$\frac{p_p f_{ps}}{f'_{dc}} + \frac{d f_{dy}}{d_p f'_{dc}}(p - p') \le 0.36\beta_1 \qquad \text{6-24}$$

When the thickness of the compression flange of a flanged section is less than the depth of the equivalent rectangular stress block, the reinforcement ratios will be such that:

$$\frac{p_{pw} f_{ps}}{f'_{dc}} + \frac{d f_{dy}}{d_p f'_{dc}}(p_w - p'_w) \le 0.36\beta_1 \qquad \text{6-25}$$

p_{pw}, p_w, p'_w = reinforcement ratios for flanged sections computed as for p_p, p and p' respectively except that b shall be the width of the web and the reinforcement area will be that required to develop the compressive strength of the web only.

6-13.2 Diagonal Tension and Direct Shear of Prestressed Elements.

Under conventional service loads, prestressed elements remain almost entirely in compression, and hence are permitted a higher concrete shear stress than non-prestressed elements. However at ultimate loads the effect of prestress is lost and thus no increase in shear capacity is permitted. The shear capacity of a precast beam may be calculated using the equations of Chapter 4 of this manual. The loss of the effect of prestress also means that *d* is the actual distance to the prestressing tendon and is not limited to 0.8*h* as it is in the ACI code. It is obvious then that at the supports of an element with draped tendons, *d* and thus the shear capacity are greatly reduced. Draped tendons also make it difficult to properly anchor shear reinforcement at the supports, exactly where it is needed most. Thus it is recommended that only straight tendons be used for blast design.

6-14 DYNAMIC ANALYSIS.

The dynamic analysis of precast elements uses the procedures described in Chapter 3 of this manual.

Since precast elements are simply supported, the resistance-deflection curve is a one-step function (see Figure 3-39a (+)). The ultimate unit resistance for various loading conditions is presented in Table 3-1 (+). As precast structures are subject to low blast pressures, the dead load of the structures become significant, and must be taken into account.

The elastic stiffness of simply supported beams with various loading conditions is given in Table 3-7 (+). In determining the stiffness, the effect of cracking is taken into account by using an average moment of inertia I_a, as follows:

$$I_a = (I_g + I_c)/2 \qquad 6\text{-}26$$

where:

I_g = *moment of inertia of the gross section*
I_c = *moment of inertia of the cracked section*

For non-prestressed elements, the cracked moment of inertia can be determined from Chapter 4. For prestressed elements the moment of inertia of the cracked section may be approximated by:

$$I_c = nA_{ps}d_p^{\,2}\left[1-(p_p)^{1/2}\right] \qquad 6\text{-}27$$

where n is the ratio of the modulus of elasticity of steel to concrete. The load-mass factors, used to convert the mass of the actual system to the equivalent mass, are given in Table 3-12 (+) for prestressed elements the load-mass factor in the elastic range is used. An average of the elastic and plastic range load-mass factors is used in the design of non-prestressed elements.

The equivalent single-degree-of-freedom system is defined in terms of its ultimate resistance r_u, equivalent elastic deflection X_E, and natural period of vibration T_N. The dynamic load is defined by its peak pressure P and duration T. The figures given in Chapter 3 may be used to determine the response of an element in terms of its maximum deflection X_m, and the time to reach maximum deflection t_m.

Recommended maximum deflection criteria for precast elements is as follows:

(1) For prestressed flexural members:

$\Theta_{max} \leq 2°$ or $\mu_{max} \leq 1$, whichever governs

(2) For non-prestressed flexural members

$\Theta_{max} \leq 2°$ or $\mu_{max} \leq 3$, whichever governs

(3) For compression members
$\mu_{max} \leq 1.3$

where:

Θ_{max} = *maximum support ratio*

μ_{max} = *maximum ductility ratio*

6-15 REBOUND.

Precast elements will vibrate under dynamic loads, causing negative deflections after the maximum deflection has been reached. The negative forces associated with these negative deflections may be predicted using Figure 3-268 (+).

6-15.1 Non-prestressed elements.

The design of non-prestressed precast elements for the effects of rebound is the same as for cast-in-place members. See Chapter 4 for a discussion of rebound effects in concrete elements.

6-15.2 Prestressed elements.

In prestressed elements, non-prestressed reinforcement must be added to what is the compression zone during the loading phase to carry the tensile forces of the rebound phase. The rebound resistance will be determined from Figure 3-268 (+), but in no case will it be less than one-half of the resistance available to resist the blast load.

The moment capacity of a precast element in rebound is as follows:

$$M_u^- = A_s^- f_{dy} (d^- - a^-/2) \qquad 6\text{-}28$$

where:

M_u^- = *ultimate moment capacity in rebound*
A_s^- = *total area of rebound tension reinforcement*
f_{dy} = *dynamic design strength of reinforcement*
d^- = *distance from extreme compression fiber to the centroid of the rebound reinforcement*
a^- = *depth of the equivalent rectangular stress block*

It is important to take into account the compression in the concrete due to prestressing and reduce the strength available for rebound. For a conservative design, it may be assumed that the compression in the concrete due to prestressing is the maximum permitted by the ACI code, i.e. 0.45 f'_c. Thus the concrete strength available for rebound is

$$0.85 f'_{dc} - 0.45 f_c' = 0.85 f'_{dc} - 0.45 f'_{dc}/DIF = 0.47 f'_{dc} \qquad 6\text{-}29$$

A more detailed analysis may be performed to determine the actual concrete compression due to prestress. In either case the maximum amount of rebound reinforcement added will be

$$A_s^- \leq \left[\frac{(0.85f'_{dc} - d_1)\beta}{f_{dy}}\right]\left[\frac{(87000 - nf)bd^-}{(87000 - nf + f_{dy})}\right] \qquad \text{6-30}$$

where f is the compression in the concrete due to prestressing and all the other terms have been defined previously. If available concrete strength is assumed to be $0.47f'_{dc}$, Equation 6-30 becomes:

$$A_s^- \leq \frac{(0.47f'_{dc}\ \beta_1)}{f_{dy}}\left[\frac{(87{,}000 - 0.37\,nf'_{dc})bd^-}{(87{,}000 - 0.37\,nf'_{dc} + f_{dy})}\right] \qquad \text{6-31}$$

6-16 CONNECTIONS.

6-16.1 General.

One of the fundamental differences between a cast-in-place concrete structure and one consisting of precast elements is the nature of connections between members. For precast concrete structures, as in the case of steel structures, connections can be detailed to transmit gravity loads only, gravity and lateral loads, or moments in addition to these loads. In general though, connectors of precast members should be designed so that blast loads are transmitted to supporting members through simple beam action. Moment-resisting connections for blast resistant structures would have to be quite heavy and expensive because of the relatively large rotations, and hence induced stresses, permitted in blast design.

In the design of connections the capacity reduction factor ϕ, for shear and bearing stresses on concrete are as prescribed by ACI code, i.e. 0.85 and 0.7 respectively. No capacity reduction factor is used for moment calculations and no dynamic increase factors are used in determining the capacity of a connector. Capacity of the connection should be at least 10 percent greater than the reaction of the member being connected to account for the brittleness of the connection. In addition the failure mechanism should be controlled by tension or bending stress of the steel, and therefore the pullout strength of the concrete and the strength of the welds should be greater than the steel strength.

The following connections are standard for use in blast design but they are not intended to exclude other connection details. Other details are possible but they must be able to transmit gravity and blast loads, rebound loads and lateral loads without inducing moments.

6-16.2 Column-to-Foundation Connection.

The standard PCI column-to-foundation connection may be used for blast design without modification. However anchor bolts must be checked for tension due to rebound in order to prevent concrete pullout.

6-16.3 Roof Slab-to-Girder Connection.

Figure 6-16 (+) shows the connection detail of a roof panel (tee section) framing into a ledger beam. The bearing pads transmit gravity loads while preventing the formation of moment couples. The bent plate welded to the plate embedded in the flange of the tee transmits lateral loads but is soft enough to deform when the roof panel tries to rotate. The angle welded to the embedded plate in the web of the tee restricts the panel, through shear action, from lifting off the girder during the rebound loading. The effects of dimensional changes due to creep, shrinkage and relaxation of prestress should be considered in this type of connection.

6-16.4 Wall Panel-to-Roof Slab Connection.

The basic concepts employed in the roof slab-to-girder connection apply to the wall panel-to-roof slab connection shown in Figure 6-17 (+). The roof panel instead of bearing on the girder, bears on a corbel cast with the tee section. The angle that transmits lateral loads has been moved from the underside of the flange to the top of the flange to facilitate field welding.

6-16.5 Wall Panel-to-Foundation Connection.

The wall panel in Figure 6-18 (+) is attached to the foundation by means of angles welded to plates cast in both the wall panel and the foundation. It is essential to provide a method of attachment to the foundation that is capable of taking base shear in any direction, and also a method of leveling and aligning the wall panel. Non-shrinking grout is used to fill the gap between the panel and the foundation so as to transmit the loads to the foundation.

6-16.6 Panel Splice.

Since precast structures are of the shear wall type, all horizontal blast loads are transferred by diaphragm action, through wall and roof slabs to the foundations. The typical panel splice shown in Figure 6-19 (+) is used for transferring the horizontal loads between panels.

6-16.7 Reinforcement Around Door Openings.

A standard double tee section cannot be used around a door opening. Instead a special panel must be fabricated to satisfy the requirements for the door opening. The design of the reinforcement around the door opening and the door frame is discussed in Chapter 4.

Figure 6-14 Common Precast Elements

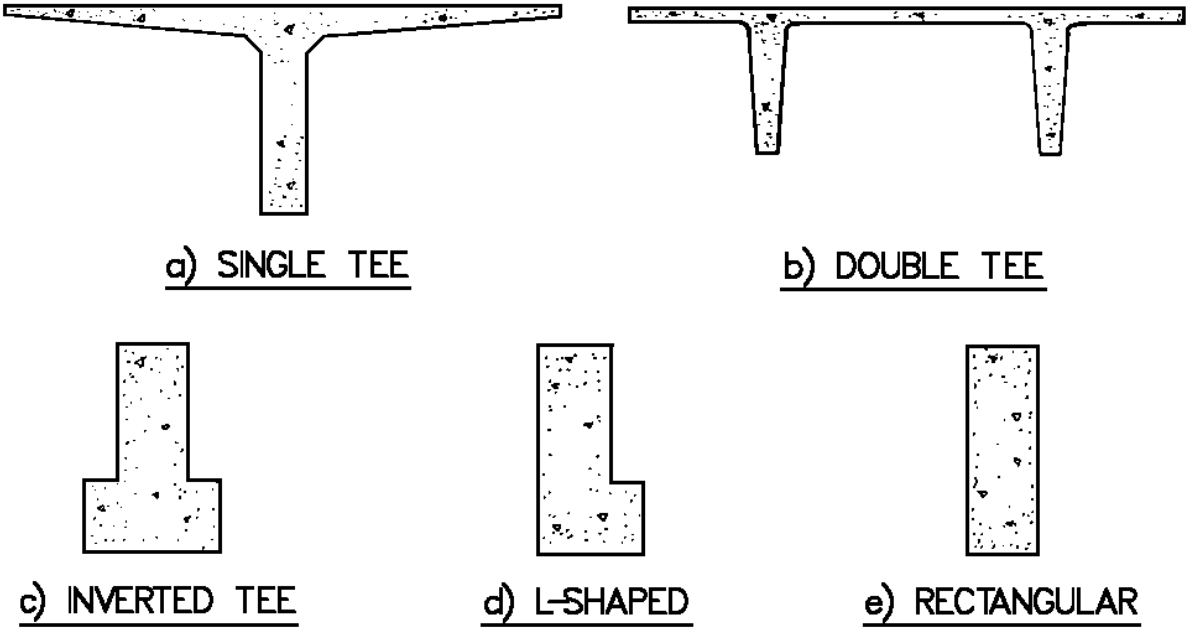

Figure 6-15 Typical Stress-Strain Curve for High Strength Wire

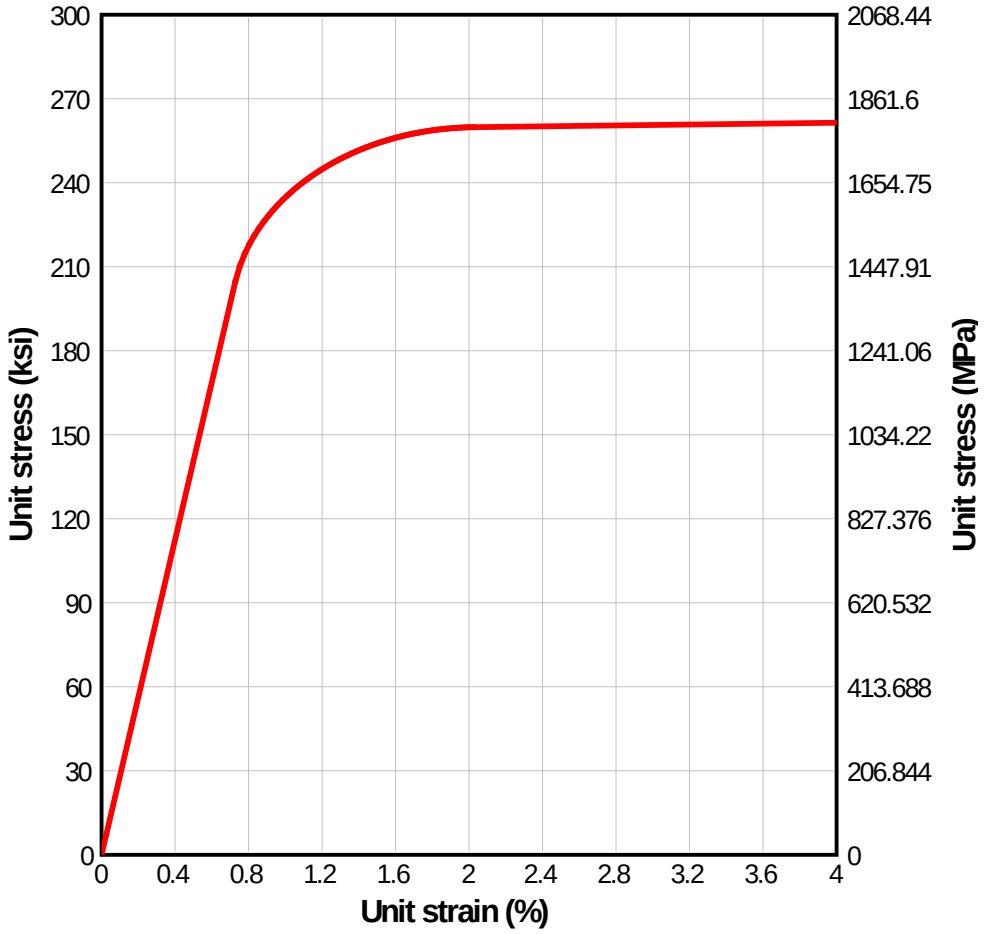

Figure 6-16 Roof Slab-to-Girder Connection

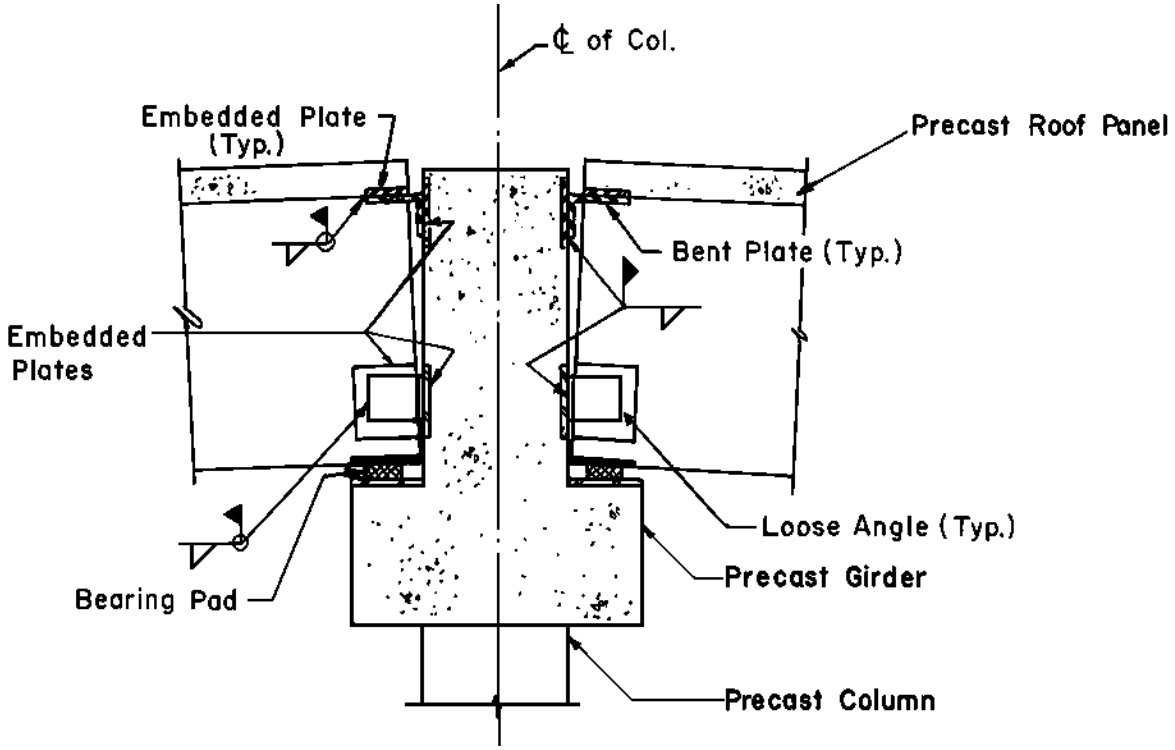

Figure 6-17 Typical Wall Panel-to-Roof Slab Connection

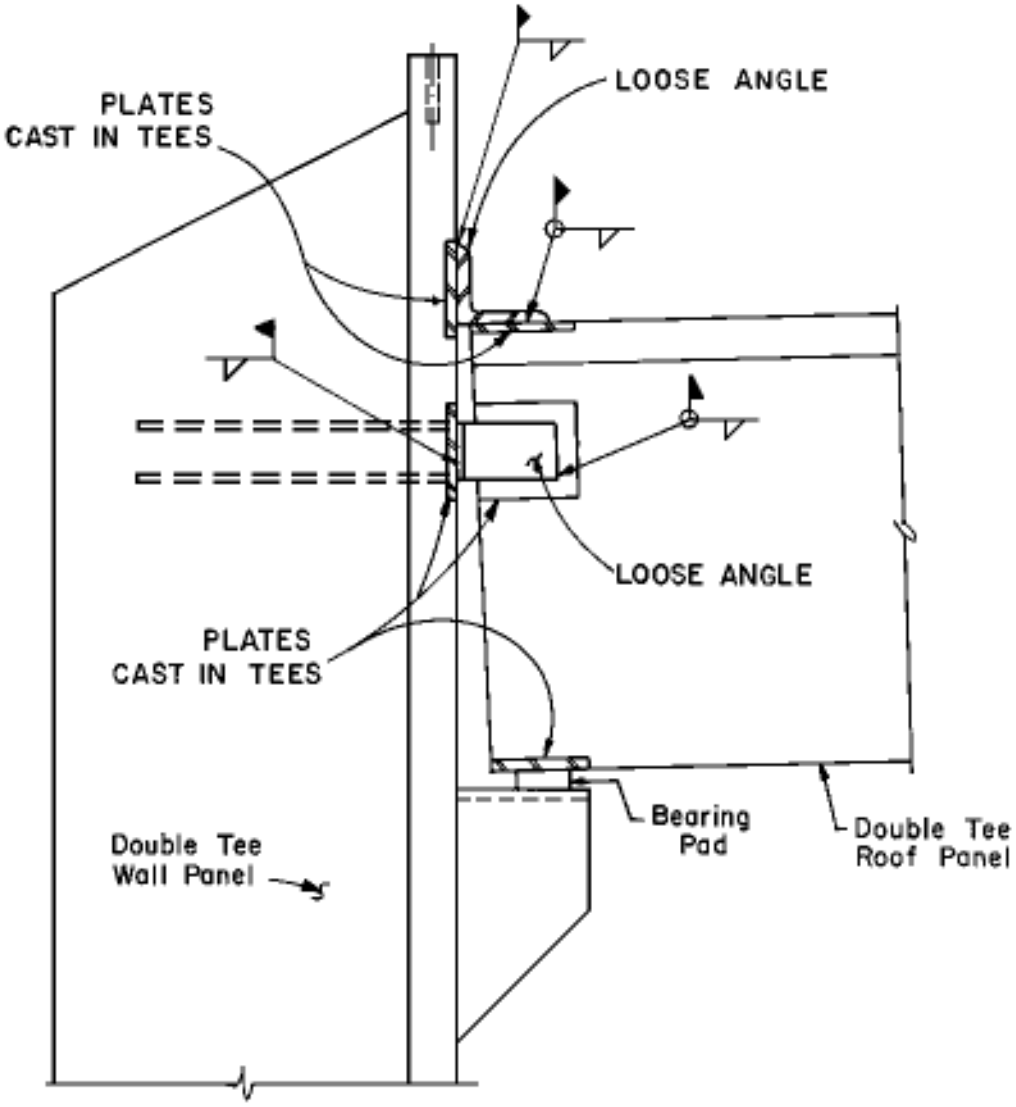

Figure 6-18 Wall Panel-to-Foundation Connection

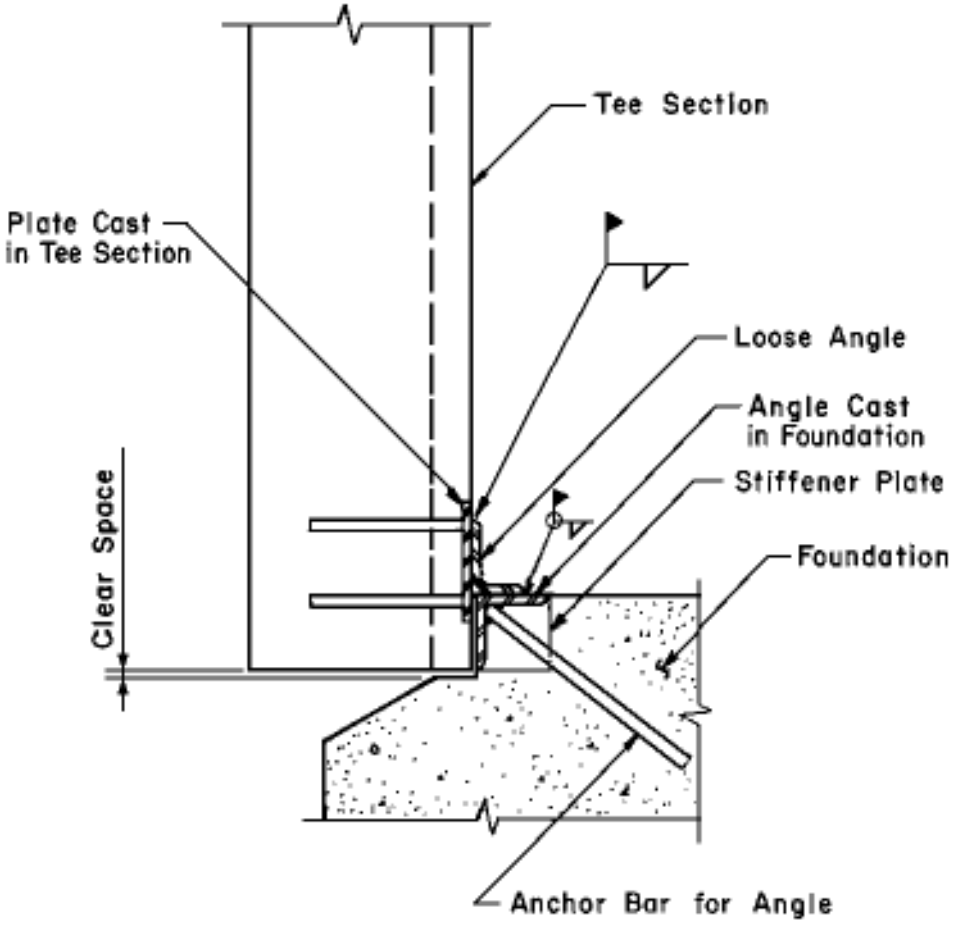

Figure 6-19 Typical Panel Splice

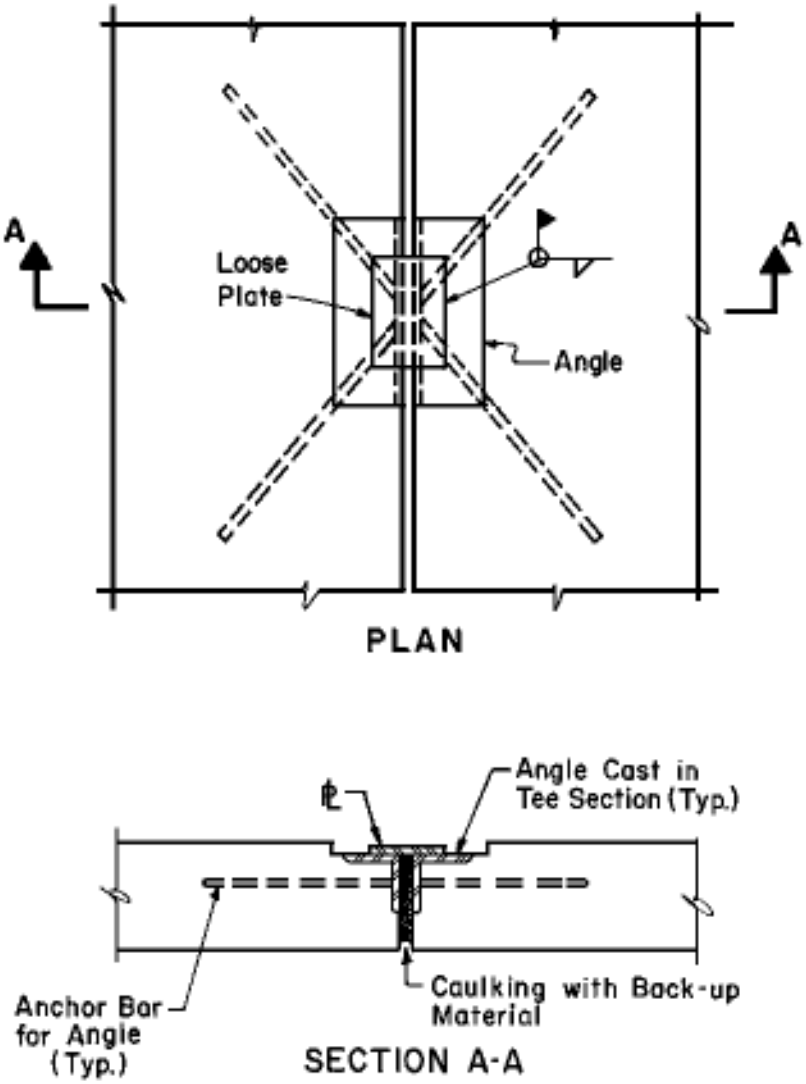

SPECIAL PROVISIONS FOR PRE-ENGINEERED BUILDING

6-17 GENERAL.

Standard pre-engineered buildings are usually designed for conventional loads (live, snow, wind and/or seismic). Blast resistant pre-engineered buildings are also designed in the same manner as standard structures. However, the conventional loadings, which are used for the latter designs, are quite large to compensate for effects of blast loads. Further, as with standard buildings, pre-engineered structures, which are designed for blast, are designed elastically for the conventional loadings with the assumption that the

structure will sustain plastic deformations due to the blast. The design approach will require a multi-stage process, including: preparation of general layouts and partial blast designs by the design engineer; preparation of the specifications, by the engineer including certain features as recommended herein; design of the building and preparation of shop drawings by the pre-engineered building manufacturers; and the final blast evaluation of the structure by design engineer utilizing the layouts on the previously mentioned shop drawings. At the completion of the analysis some slight modifications in building design may be necessary. However, if the following procedures are used, then the required modifications will be limited and in some cases eliminated for blast overpressures upward to 2 psi.

6-18 GENERAL LAYOUT.

The general layout of pre-engineered buildings is based on both operational and blast resistant requirements. Figure 6-20 (+) illustrates a typical general layout of the pre-engineered building. The general requirements for structural steel, concrete, wall and roof coverings and connections are given below.

6-18.1 Structural Steel.

In order for a pre-engineered building to sustain the required blast loading, structural steel layout must conform to the following requirements:

1. The maximum spacing between main transverse rigid frames (bay width) shall not exceed 20 feet.

2. The maximum spacing between column supports for rigid frames shall not exceed 20 feet while the overall height of frames shall be 30 feet or less.

3. Slope of the roof shall not exceed four horizontal to one vertical. However, the roof slope shall be as shallow as physically possible and be in compliance with the requirements of the Metal Building Manufacturers' Association.

4. Spacing between girts shall not exceed 4 feet while the space between purlins shall not be greater than 5 feet.

5. Primary members, including frames and other main load carrying members, shall consist of hot rolled structural steel shapes. The shapes must be doubly-symmetrical and have a constant depth. They may be wide-flange sections, I-sections, structural tubes, or welded shapes built-up from hot rolled steel sheet, strips or plates. Secondary structural framing, such as girts, roof purlins, bridging, eave struts and other miscellaneous secondary framing, may consist of either hot rolled or cold-formed structural steel. All main secondary members (purlins, girts, etc.) shall be doubly-symmetrical sections of constant depth (e.g. wide flange, “I”-shaped, structural tubing).

6. Primary structural framing connections shall be either shop welded or bolted or field bolted assemblies. ASTM A 325 bolts with appropriate nuts and washers shall be used for connecting of all primary members; where as secondary members may use bolts conforming to ASTM A 307. A minimum of two bolts shall be used for each connection while bolts for primary and secondary members shall not be less than 3/4 and 1/2-inch in diameter, respectively.

7. Base plates for columns shall be rolled and set on grout bed of 1-inch minimum thickness. ASTM A 307 steel bolts shall be used to anchor all columns.

6-18.2 Foundations.

Concrete floor and foundation slabs shall be monolithic in construction and shall be designed to transfer all horizontal and vertical loads from the pre-engineered superstructure to the foundation soil. Minimum slab thickness shall be 6 inches with edge beams thickened to meet local frost conditions.

6-18.3 Roof and Walls.

Roof and wall coverings must meet the following requirements:

1. Roof and wall coverings shall conform to ASTM A 446, G 90, have a minimum depth of 1-1/2 inches corrugation and have a material thickness of 22 gauge.

2. Conventional side laps are not usually sufficient to resist the effects of blast loads. The construction details required to strengthen those joints depend upon the type of decking employed. Chapter 5 gives the required panel-to-panel attachments for various types of decking.

3. Insulation retainers or sub girts shall be designed to transmit all external loads (listed below) which act on the metal cover to the structural steel framing.

4. Roof and wall liners shall be a minimum of 24 gauge and shall be formed to prevent waviness, distortion or failure as a result of the impact by external loads.

6-18.4 Connections for Roof and Wall Coverings.

The connections used in a blast resistant structure are especially critical. To ensure full development of structural steel and the roof and wall panels, connections must meet the following criteria:

1. Fasteners for connecting roof and wall coverings to structural steel supports shall be designed to support the external loads (listed below) and shall consist of either self-tapping screws, self-drilling and self-tapping

screws, bolts and nuts, self-locking rivets, self-locking bolts, end welded studs, or welds. Fasteners of covering to structural steel shall be located at valleys of the covering and shall have a minimum of one fastener per valley.

2. Fasteners which do not provide positive locking such as self-tapping screws, etc. shall not be used at side laps and for fastening accessories to panels. At least one fastener for side laps shall be located in each valley and at a maximum spacing along the valley of 8 inches.

3. Self tapping screws shall not have a diameter smaller than a no. 14 screw while the minimum diameter of a self-drilling and self-tapping type shall be equal to or greater than a no. 12 screw. Automatic welded studs shall be shouldered type and have a shank diameter of at least 3/16 inch. Fasteners for use with power actuated tools shall have a shank diameter of not less than 1/2 inch. Blind rivets shall be stainless steel type and have a minimum diameter of 1/8 inch. Rivets shall be threaded stem type if used for other than fastening trim and if of the hollow type shall have closed ends. Bolts shall not be less than 1/4 inch in diameter and will be provided with suitable nuts and washers.

If suction and/or rebound loads dictate, provide oversized washers with a maximum outside diameter of 2 inches or a 22 gauge thick metal strip along each valley.

6-19 PREPARATION OF PARTIAL BLAST ANALYSIS.

A partial blast analysis of a pre-engineered building shall be performed by the design engineer. This analysis shall include the determination of the minimum size of the roof and wall panels which is included in the design specifications and the design of the building foundation and floor slab. The foundation and floor slab shall be designed monolithically and have a minimum thickness as previously stated. The slab shall be designed for a foundation load equal to either 1.3 times the yield capacity of the building roof equivalent blast load or the static roof and floor loads listed below. Quite often the foundation below the building columns must be thickened to distribute the column loads. For the blast analysis of the building foundation and floor slab, the dynamic capacity of the soil below the foundation slab can conservatively be assumed to be equal to twice the static soil capacity. The resistance of the roof of the building can be determined in accordance with the procedures given in Chapter 5. The front panel of the building is designed in the same manner as the roof panel. The blast loads for determining the capacities of the roof and wall panels can be determined from Chapter 2.

6-20 PRE-ENGINEERED BUILDING DESIGN.

Design of the pre-engineered building shall be performed by the pre-engineered building manufacturer using static loads and conventional stresses.

Conventional stresses are listed in “Specification for the Design, Fabrication and Erection of Structural Steel for Buildings with Commentary.” Static design loads shall be as follows:

1. Floor live loads shall be as specified in the report titled “American National Standard Building Code Requirements for Minimum Design Loads in Buildings and Other Structures” (hereafter referred to as ANSI) but not less than 150 pounds per square foot.

2. Roof live loads shall be as specified ANSI.

3. Dead loads are based on the materials of construction.

4. Wind pressure shall be as computed in accordance with ANSI for exposure “C” and a wind speed of 100 miles per hour.

5. Seismic loads will be calculated according to the Uniform Building Code for the given area. If this load is greater than the computed wind pressure, than the seismic load will be substituted for wind load in all load combinations.

6. Auxiliary and collateral loads are all design loads not listed above and include suspended ceilings, insulation, electrical systems, mechanical systems, etc.

Combinations of design loads shall include the following (a) dead loads plus live loads; (b) dead loads plus wind loads, and (c) 75 percent of the sum of dead, live and wind loads.

6-21 BLAST EVALUATION OF THE STRUCTURE.

Blast evaluation of the structure utilizing the shop drawings prepared in connection with the above design shall be performed by the design engineer. A dynamic analysis which describes the magnitude and direction of the elastoplastic stresses developed in the main frames and secondary members as a result of the blast loads, shall be performed using the methods described in Chapter 5. This evaluation should be made at the time of the shop drawing review stage.

6-22 RECOMMENDED SPECIFICATION FOR PRE-ENGINEERED BUILDINGS.

Specifications for pre-engineered buildings shall be consistent with the recommended design changes set forth in the preceding section. These example specifications are presented using the Construction Specification Institute (CSI) format and shall contain as a minimum the following:

1. APPLICABLE PUBLICATIONS. The following publications of the issues listed below, but referred to thereafter by basic designation only, form a part of this specification to the extent indicated by the reference thereto:

1.1 American Society of Testing and Materials (ASTM)

A 36	Structural Steel
A 307-80	Standard Specification for Carbon Steel Externally and Internally Threaded Standard Fasteners
A 325	Standard Specification for High Strength Bolts for Structural Steel Joint Including Suitable Nuts and Plain Hardened Washers
A 446	Specification for Steel Sheet, Zinc Coated (Galvanized) by the Hot-Dip Process, Physical (Structural) Quantity
A 501	Standard Specification for Hot-Formed Welded and Seamless Carbon Steel Structural Tubing
A 529	Standard Specification for Structural Steel with 42,000 psi Minimum Yield Point
A 570	Standard Specification for Hot-Rolled Carbon Steel Sheet and Strip, Structural Quality
A 572	Specification of High-Strength Low-Allow Columbium-Vanadium Steels of Structural Quality

1.2 American Iron and Steel Institute (AISI)

Specification for the Design of Cold-Formed Steel Structural Members and Commentary

1.3 American National Standards Institute (ANSI)

A58.1	Minimum Design Loads for Buildings and Other Structures
B18.22.1	Plain Washers

1.4 American Institute of Steel Construction (AISC)

Specification for the Design Fabrication and Erection of Structural Steel for Buildings with Commentary Research Council on Riveted and Bolted Structural Joints (RCRBSJ)

Specification for Structural Joints Using ASTM A 325 or A 490 Bolts

1.5 American Welding Society (AWS)

D1.1 Structural Welding Code

1.6 Metal Building Manufacturers' Association (MBMA)

Metal Buildings Systems Manual

1.7 Uniform Building Code

2. GENERAL.

2.1 This section covers the manufacture and erection of pre-engineered metal structures. The structure manufacturer shall be regularly engaged in the fabrication of metal structures.

2.2 The structure shall include the rigid framing, which are spaced at a maximum of 20 feet on center, roof and wall covering, trim, closures, and accessories as indicated on the drawings. Minor alterations in dimensions shown on the drawings will be considered in order to comply with the manufacturer's standards building system, provided that all minimum clearances indicated on the drawings are maintained. Such changes shall be submitted for review and acceptance prior to fabrication.

2.3 Drawings shall indicate extent and general assembly details of the metal roofing and sidings. Members and connections not indicated on the drawings shall be designed by the Contractor in accordance with the manufacturer's standard details. The Contractor shall comply with the dimensions, profile limitations, gauges and fabrication details shown on the drawings. Modification of details will be permitted only when approved by the Owner. Should the modifications proposed by the Contractor be accepted by the Owner, the Contractor shall be fully responsible for any re-design and re-detailing of the building construction effected.

3. DEFINITIONS.

3.1 Low Rigid Frame. The building shall be single gable type with the roof slope not to exceed one on four.

3.2 Framing.

3.2.1 Primary Structural Framing. The primary structural framing includes the main transverse frames and other primary load carrying members and their fasteners.

3.2.2 Secondary Structural Framing. The secondary structural framing includes the girts, roof purlins, bridging, eave struts, and other miscellaneous secondary framing members and their fasteners.

3.2.3 Roof and Wall Covering. The roof and wall covering includes the exterior ribbed metal panel having a minimum depth of one and one-half inches, neoprene closure, fasteners and sealant.

3.3 Building Geometry.

3.3.1 Roof Slope. The roof of the building shall have a maximum slope not to exceed one on four.

3.3.2 Bay Spacing. The bay spacing shall not exceed 20 feet.

3.4 Column Shape. Main frame columns shall be doubly symmetrical members of constant depth; tapered columns will not be permitted.

3.5 Calculations. The Contractor shall submit for review complete design calculations for all work, sealed by a registered professional engineer.

4. STRUCTURAL DESIGN.

4.1 Structural Analysis. The structural analysis of the primary and secondary framing and covering shall be based on linear elastic behavior and shall accurately reflect the final configuration of the structure and all tributary design loadings.

4.2 Basic Design Loads.

4.2.1 Roof Live Load. Shall be applied to the horizontal roof projection. Roof live loads shall be:

0 to 200 square feet tributary area - 20 psf

200 to 600 square feet tributary area - linear variation 20 psf to 12 psf

over 600 square feet tributary area - 12 psf

4.2.2 Wind Pressure. Wind design loads shall be computed in accordance with ANSI A58.1 for exposure “C” and a basic wind speed of 100 miles per hour.

4.2.2.1 Typical Wind Loading. As shown on drawings (Figure 6-21 (+)).

4.2.2.2 Wind Loading at Building Corners. As shown on the drawings (Figure 6-21).

4.2.2.3 Wind Loading on Girts. As shown on drawings (Figure 6-21).

4.2.2.4 Wind Loading on Purlins and Roof Tributary Areas. As shown on drawings (Figure 6-21(+))

4.2.2.5 Wind Loading for Design of Overall Structure. As shown on drawings (Figure 6-21).

4.2.3 Auxiliary and Collateral Design Loads. Auxiliary and collateral design loads are those loads other than the basic design live, dead, and wind loads; which the building shall safely withstand, such as ceilings, insulation, electrical, mechanical, and plumbing systems, and building equipment and supports.

4.3 Application of Design Loads.

4.3.1 Roof Live Load and Dead Load. The roof live load (*L*), and dead load (*D*), shall be considered as a uniformly distributed loading acting vertically on the horizontal projection of the roof.

4.3.2 Snow Loads. Application of 30 psf due to snow loads.

4.3.3 Wind Loads (*W*). Application of forces due to wind shall conform to the latest ANSI A58.1

4.3.4 Combination of Loads. The following combinations of loads shall be considered in the design of all members of the structure:

$D + L$

$D + W$

$0.75\ (D + L + W)$

4.4 Deflection Limitations.

4.4.1 Structural Framing. The primary and secondary framing members shall be so proportioned that their maximum calculated roof live load deflection does not exceed 1/120 of the span.

5. STRUCTURAL FRAMING.

5.1 General

5.1.1 All hot rolled structural shapes and structural tubing shall have a minimum yield point of 36,000 psi in conformance with ASTM A 36 or A 501. All hot rolled steel plate, strip and sheet used in the fabrication of welded assemblies shall

conform to the requirements of ASTM A 529, A 572, Grade 42 or A 570 Grade “E” as applicable. All hot rolled sheet and strip used in the fabrication of cold-formed members shall conform to the requirements of ASTM A 570, Grade “E” having a minimum yield strength of 50,000 psi. Design of cold-formed members shall be in accordance with the AISI specifications.

5.1.2 The minimum thickness of framing members shall be:

Cold-formed secondary framing members	- 18 gauge
Pipe or tube columns	- 12 gauge
Webs of welded built-up members	- 1/8 inch
Flanges of welded built-up members	- 1/4 inch
Bracing rods	- 1/4 inch

5.1.3 All framing members shall be fabricated for bolted field assembly. Bolt holes shall be punched or drilled only. No burning-in of holes will be allowed. The faying surfaces of all bolted connections shall be smooth and free from burrs or distortions. Provide washers under head and nut of all bolts. Provide beveled washers to match sloping surfaces as required. Bolts shall be of type specified below. Members shall be straight and dimensionally accurate.

5.1.4 All welded connections shall be in conformance with the STRUCTURAL WELDING CODE D1.1 of the American Welding Society. The flange-to-web welds shall be one side continuous submerged arc fillet welds. Other welds shall be by the shielded arc process.

5.2 Primary Structural Framing.

5.2.1 The primary members shall be constructed of doubly-symmetrical, hot rolled structural steel shapes or doubly-symmetrical built-up members of constant depth, welded from hot rolled steel sheet, strip or plates.

5.2.2 Compression flanges shall be laterally braced to withstand any combination of loading.

5.2.3 Bracing system shall be provided to adequately transmit all lateral forces on the building to the foundation.

5.2.4 All bolt connections of primary structural framing shall be made using high-strength zinc-plated (0.0003 bronze zinc plated) bolts, nuts, and washers conforming to ASTM A 325. Bolted connections shall have not less than two bolts. Bolts shall not be less than 3/4 inch diameter. Shop welds and field bolting are preferred. All field welds will require prior approval of the Owner. Installation of fasteners shall be by the turn-of-nut or load-indicating washer method in accordance with the specifications for structural joints of the Research Council on Riveted and Bolted Structural Joints.

5.3 Secondary members may be constructed of either hot rolled or cold-formed steel. Purlins and girts shall be doubly symmetrical sections of constant depth and they may be built-up, cold-formed or hot rolled structural shapes.

5.3.1 Maximum spacing of roof purlins and wall girts shall not exceed 5 feet.

5.3.2 Compression flanges of purlins and girts shall be laterally braced to withstand any combination of loading.

5.3.3 Supporting lugs shall be used to connect the purlins and girts to the primary framing. The lugs shall be designed to restrain the light gauge sections from tipping or warping at their supports. Each member shall be connected to each lug by a minimum of two fasteners.

5.3.4 Vertical wall members not subjected to axial load, e.g. vertical members at door openings, shall be constant depth sections. They may consist of hot rolled or cold-form steel. They shall be either built-up, cold-formed or hot rolled “C” or “I” shapes.

5.3.5 Fasteners for all secondary framing shall be a minimum of 1/2 inch diameter (0.003 zinc plated) bolts conforming to ASTM A 307. The fasteners shall be tightened to SNUG TIGHT condition. Plain washers shall conform to ANSI standard B18.22.1.

6. ANCHORAGE.

6.1 Anchorage. The building anchor bolts for both primary and secondary columns shall conform to ASTM A 307 steel and shall be designed to resist the column reactions produced by the specified design loading. The quantity, size and location of anchor bolts shall be specified and furnished by the building manufacturer. A minimum of two anchor bolts shall be used with each column.

6.2 Column Base Plates. Base plates for columns shall conform to ASTM A 36 and shall be set on a grout bed of 1 inch minimum thickness.

7. ROOF AND WALL COVERING.

7.1 Roof and wall panels shall conform to zinc-coated steel, ASTM A 446, G 90 coating designation. Minimum depth of each panel corrugation shall be 1-1/2 inches and shall have a minimum material thickness of 22 gauge. The minimum yield strength of panel material shall be 33,000 psi. Wall panels shall be applied with the longitudinal configurations in the vertical position. Roof panels shall be applied with the longitudinal configuration in direction of the roof slope. Side laps of roof and wall panels shall be fastened as shown on drawings. End laps, if required shall occur at structural steel supports and have a minimum length of 12 inches.

7.2 Insulation.

7.2.1 Semi-rigid insulation for the preformed roofing and siding shall be supplied and installed by the preformed roofing and siding manufacturer.

7.2.2 Insulation Retainers. Insulation retainers or sub girts shall be designed to transmit all external loads (wind, snow and live loads) acting on the metal panels to the structural steel framing. The retainers shall be capable of transmitting both the direct and suction loads.

7.3 Wall and Roof Liners. Wall and roof liners shall be a minimum of 24 gauge. All liners shall be formed or patterned to prevent waviness, distortion or failure as a result of the impact by external loads.

7.4 Fasteners. Fasteners for roof and wall panels shall be zinc-coated steel or corrosion-resisting steel. Exposed fasteners shall be gasketed or have gasketed washers of a material compatible with the covering to waterproof the fastener penetration. Gasketed portion of fasteners or washers shall be neoprene or other elastomeric material approximately 1/8 inch thick.

7.4.1 Type of Fasteners. Fasteners for connecting roof or wall panels to structural steel supports shall consist of self-tapping screws, self-drilling and self-tapping screws, bolts, end welded studs, and welds. Fasteners for panels which connect to structural supports shall be located in each valley of the panel and with a minimum of one fastener per valley while at end laps and plain ends, a minimum of two

fasteners shall be used per valley. Fasteners shall not be located at panel crowns.

7.4.2 Fasteners which do not provide positive locking such as self-tapping screws or self-drilling and self-tapping screws shall not be used at side laps of panels and for fastening accessories to panels. Fasteners for side laps shall be located in each valley of the overlap and positioned a maximum of 8 inches on center.

7.4.3 Screws shall be not less than No. 14 diameter if self-tapping type and not less than No. 12 diameter if self-drilling and self-tapping type.

7.4.4 Automatic end-welded studs shall be shouldered type with a shank diameter of not less than 3/16 inch with cap and nut for holding the covering against the shoulder.

7.4.5 Fasteners for use with power actuated tools shall have a shank diameter of not less than 1/2 inch. Fasteners for securing wall panels shall have threaded studs for attaching approved nuts or caps.

7.4.6 Blind rivets shall be stainless steel with 1/8 inch nominal diameter shank. Rivets shall be threaded stem type if used for other than fastening of trim. Rivets with hollow stems shall have closed ends.

7.4.7 Bolts shall not be less than 1/4 inch diameter, shoulders or plain shank as required with proper nuts.

7.4.8 Provide oversize washers with an outside diameter of 1 inch at each fastener or a 22 gauge thick metal strip along each valley of the panel to negate pull-out of the panel around the fasteners.

Figure 6-20. General Layout of Pre-Engineered Building

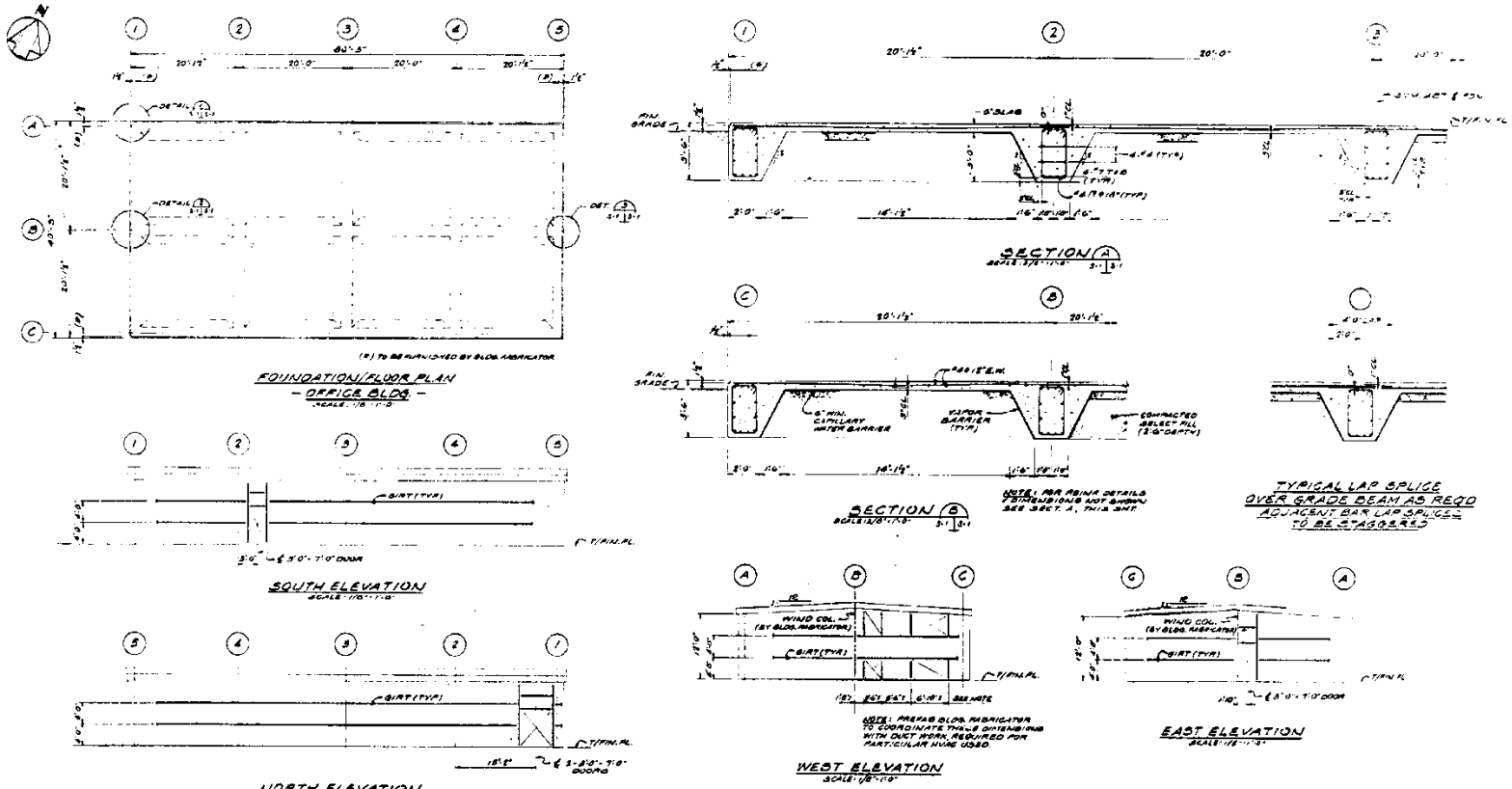

GENERAL NOTES

1. ALL CONCRETE SHALL HAVE A MINIMUM COMPRESSIVE STRENGTH OF f'_c = 4,000 psi AT 28 DAYS.
2. ALL REINFORCING BARS SHALL CONFORM TO SPECIFICATIONS FOR DEFORMED BILLET STEEL BARS FOR CONCRETE REINFORCEMENT, ASTM DESIGNATION A-615, GRADE 60, UNLESS NOTED OTHERWISE.
3. CONCRETE AGGREGATE SHALL HAVE A MAXIMUM SIZE OF 3/4 INCH.
4. MINIMUM AND MAXIMUM CONCRETE SLUMP SHALL BE 2 AND 3 INCHES, RESPECTIVELY, UNLESS NOTED OTHERWISE.
5. ALL REINFORCING BARS SHALL BE CONTINUOUS IN ANY ONE DIRECTION, EXCEPT WHERE OTHERWISE SHOWN ON DRAWINGS.
6. NO WELDING OF REINFORCING SHALL BE PERMITTED EXCEPT AS SHOWN ON DRAWINGS AND FOR BRAZING OR SPOT-WELDING AT ENDS OF REINFORCING BARS FOR GROUNDING.
7. SURFACES OF ALL JOINTS SHALL BE ROUGHENED BEFORE THE SET OF CONCRETE. SURFACES OF SET CONCRETE SHALL BE PREPARED BEFORE NEW POUR AS SPECIFIED IN THE ACI MANUAL OF CONCRETE INSPECTION, SP-2.
8. VERTICAL AND HORIZONTAL CONSTRUCTION JOINTS SHALL NOT BE PERMITTED, EXCEPT AS SHOWN ON DRAWINGS, OR WITH THE APPROVAL OF THE CONTRACTING OFFICER.
9. AT LEAST THE TOP 6 INCHES OF SUBGRADE SHALL BE COMPACTED TO 95% OF MAXIMUM DENSITY IN ACCORDANCE WITH ASTM STANDARD D-1557.
10. EXCEPT AS NOTED, ALL CONCRETE CONSTRUCTION, INCLUDING REINFORCEMENT DETAILING AND PLACEMENT, SHALL CONFORM TO THE MANUAL OF STANDARD PRACTICE FOR DETAILING REINFORCED CONCRETE STRUCTURES (ACI 315, LATEST EDITION), AND THE BUILDING CODE REQUIREMENTS FOR REINFORCED CONCRETE (ACI 318 AND COMMENTARY - LATEST EDITION).
11. THE STRUCTURAL STEEL CONSTRUCTION SHALL CONFORM TO THE AISC SPECIFICATIONS FOR DESIGN, FABRICATION AND ERECTION OF STRUCTURAL STEEL FOR BUILDINGS.
12. ALL PRIMARY STRUCTURAL STEEL SHAPES AND BASE PLATES SHALL CONFORM TO SPECIFICATIONS FOR STRUCTURAL STEEL, ASTM DESIGNATION A-36 (LATEST EDITION), UNLESS NOTED OTHERWISE. HIGH-STRENGTH BOLTING SHALL BE IN ACCORDANCE WITH THE RCSC SPECIFICATION FOR STRUCTURAL JOINTS USING ASTM A-325 BOLTS AND SHALL HAVE A MINIMUM DIAMETER OF 3/4 INCHES.
13. ALL SECONDARY STRUCTURAL STEEL CONSISTING OF ROLLED SHEET OR STRIP USED FOR THE FABRICATION OF COLD-FORMED MEMBERS SHALL CONFORM TO ASTM A-570 GRADE E. DESIGN OF COLD-FORMED MEMBERS SHALL BE IN ACCORDANCE WITH AISI SPECIFICATIONS. STANDARD CARBON BOLTS CONFORMING TO ASTM A-307 SHALL BE USED FOR ASSEMBLING COLD-FORMED MEMBERS. MINIMUM DIAMETER OF BOLTS IS 1/2 INCH.
14. ALL WELDING OF STRUCTURAL STEEL SHALL CONFORM TO THE STANDARD SPECIFICATIONS FOR STRUCTURAL WELDING CODE AWS D1.1 (LATEST EDITION).
15. THE CONTRACTOR SHALL BE RESPONSIBLE FOR THE DESIGN OF ALL STRUCTURAL STEEL CONNECTIONS AND OTHER STRUCTURAL MEMBERS, NOT SHOWN ON THE DRAWINGS, IN ACCORDANCE WITH THE AISC SPECIFICATIONS. ALL FLEXURAL MEMBER CONNECTIONS SHALL BE DESIGNED FOR THE FULL SHEAR CAPACITY OF THE MEMBER. BOLTED CONNECTIONS SHALL NOT HAVE LESS THAN TWO (2) BOLTS.
16. SHOP DRAWINGS SHALL BE SUBMITTED FOR APPROVAL.

Figure 6-21 Recommended Pre-Engineered Building Design Loads

1. FLOOR LIVE LOAD: 150 psf

2. ROOF LIVE LOAD

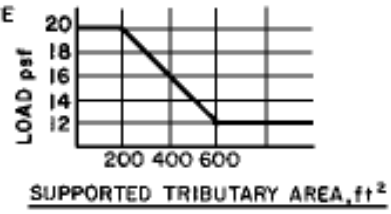

3. ROOF SNOW LOAD: 30 psf

4. DEAD LOAD: AS PER MATERIALS USED

5. WIND LOADS: WIND PARALLEL OR PERPENDICULAR TO ROOF RIDGE (BASED ON 100 mph WIND)

A. WINDWARD/LEEWARD AND ROOF PRESSURES (psf)

a. WHEN TRIBUTARY SUPPORT AREAS > 200 ft²

FOR DESIGN OF MAIN FRAMES AND OTHER INDIVIDUAL MEMBERS, USE VALUES SHOWN.

b. WHEN TRIBUTARY SUPPORT AREA ≤ 200 ft²

FOR DESIGN OF MAIN FRAMES, USE VALUES SHOWN FOR TRIBUTARY AREA > 200 ft². FOR DESIGN OF OTHER INDIVIDUAL MEMBERS, USE VALUES SHOWN

B. SIDEWALL PRESSURES (psf)

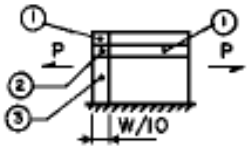

FOR DESIGN OF INDIVUAL MEMBERS:
WHEN TRIBUTARY SUPPORTED > 200 ft², USE P = 32
WHEN TRIBUTARY SUPPORTED ≤ 200 ft², USE P = 43

C. SIDESWAY PRESSURES (psf)

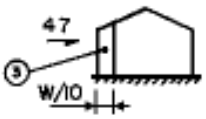

FOR DESIGN OF MAIN FRAMES FOR TRIBUTARY SUPPORTED AREAS, TA, LESS THAN, EQUAL TO, OR GREATER THAN, 200 ft²

D. LOCAL PRESSURES - SEE FIGURES IN 'B' AND 'C' FOR REGIONS OF APPLICATION

REGION 1: 50 psf SUCTION		FOR DESIGN OF DECKING
REGION 2: 105 psf SUCTION		CONNECTIONS AT REGIONS
REGION 3: 42 psf SUCTION		CITED

"W" IS LEAST WIDTH OF ENCLOSED AREA

NOTE: FIGURES DEPICT WIND PERPENDICULAR TO RIDGE. FOR WIND PARALLEL TO RIDGE, USE SAME VALUES.

6. LOADING COMBINATIONS:

A. D	WHERE
B. D + L	D = DEAD LOAD
C. D + W	L = LIVE LOAD
D. 0.75 (D + L + W)	W = WIND LOAD

SUPPRESSIVE SHIELDING

6-23 GENERAL.

This manual presents methods for the design and construction of conventional reinforced concrete and steel protective facilities which provide adequate safety for hazardous operations such as munitions loading, maintenance, renovation, or demilitarization. Such safety considerations include the utilization of conventional protective barriers, total containment construction, or the use of separation distances or isolation of the specific operation from other parts of the facility using appropriate quantity distance specifications. However, an alternative available to the designer of these facilities is the use of suppressive shielding as outlined in HNDM 1110-1-2, “Suppressive Shields Structural Design and Analysis Handbook,” 18 November 1977.

A suppressive shield is a vented steel enclosure which controls or confines the hazardous blast, fragment, and flame effects of detonations. Suppressive shielding may provide cost or safety effective alternatives to conventional facilities, depending upon the hazardous situation under study. HNDM 1110-1-2 presents procedures for design, analysis, quality control, and economic analysis of suppressive shields. In this section, a brief review of these procedures is presented. The reader should refer to HNDM 1110-1-2 for details necessary for design.

6-24 APPLICATION.

Facility operations such as munitions loading, maintenance, modification, renovation, or demilitarization must be analyzed to determine which operations involve potentially catastrophic (CAT I or II, MIL STD 882A) hazards in the event of an inadvertent ignition or detonation. Where the hazard analysis shows such a potential, the facility design must provide adequate safety for those operations. The alternatives presented to the designer of the facility are varied and may include the utilization of conventional protective barricades with appropriate separation distances, reinforced concrete or steel structures, suppressive shields, or isolation of a particular operation from the rest of the facility by the appropriate quantity-distance. The decision as to which alternative system to use is based primarily on economic factors, provided all safety considerations are equal. The facility, availability of real estate, and equipment costs to include maintenance, operation, useful life, replacement, and modification or renovation must be analyzed for each alternative method of protection. Costs will be estimated and compared over the facility life to determine the most economical mode of protection.

A major factor which is paramount in the determination of which form of protection to use is the requirement for approval of the facility by the Department of Defense Explosives Safety Board. If the designer can, based on economic factors, adapt suppressive shields in the design and support the adaptation with proven accepted analytical techniques, he should begin development of a facility concept which employs suppressive shields using those shields which have been safety approved.

6-24.1 Safety Approved Suppressive Shields.

There are eight suppressive shield design groups that have been developed to various stages of definition. These shield groups are summarized in Table 6-5 (+) and illustrated schematically in Figure 6-22 (+/+). Of the design groups illustrated, five had been safety approved by the Department of Defense Explosive Safety Board in 1977.

The five suppressive shield group designs approved by the DoD Explosive Safety Board (Groups 3, 4, 5, 6, and 81 mm) have been designed to meet the requirements for most applications to ammunition load, assembly, pack (LAP) in the Munitions Production Base Modernization and Expansion Program. However, specific shield requirements will vary with other applications and, even with LAP applications, design details will vary from plant to plant and between munitions or different operations on the line. It will, therefore, frequently be necessary to modify the approved shields to adapt them to the operation under consideration.

Chapter II and Appendix A of HNDM 1110-1-2 describes the safety approved shield group designs, provides guidance concerning acceptable modifications, recommends procedures for securing safety approval of new shield designs, and provides summary information on overall dimensions of the shield structure, charge capacity, rated overpressure, fragment stopping wall thickness, and type of construction of the five approved basic shield groups.

6-24.2 New Shield Design.

In exceptional cases where a safety approved shield cannot be made to fit a desired application, a new shield can be designed. The guidance needed to design a new shield and the procedures for obtaining the safety approval for the new design are outlined in HNDM 1110-1-2.

6-24.2.1 Hazardous Environments.

Considering that the hazardous environments normally associated with suppressive shielding involves explosives and/or explosive ordnance, Chapter III of HNDM 1110-1-2 presents information relative to internal and external air blast, fragmentation, and fireball phenomena. This information can be used in support of blast and fragment methods in this manual to determine venting requirements, air blast loads on the structure, and protection required to defeat fragments. Some graphs and prediction methods in Chapter 2 of this manual are taken directly from the suppressive shields manual.

6-24.2.2 Structural Behavior.

Suppressive shields can be subjected to large, high pressure loads applied very rapidly. The allowance of inelastic behavior of the shield material structural elements enables much more efficient use of the structural material and does not impair the function of the shield provided, of course, that the inelastic behavior is maintained within acceptable limits.

The structural materials of primary interest in suppressive shielding are steel and reinforced concrete. Chapter IV of HNDM 1110-1-2 discusses the behavior and properties of these structural materials under static and dynamic loading. Additionally, ductility ratios as they apply to suppressive shield application are covered. Some of the information provided will duplicate material in chapters of this manual. In case of a conflict, this manual takes precedence.

6-24.2.3 Structural Design and Analysis.

Chapter V of HNDM 1110-1-2 describes techniques which are sufficiently accurate for preliminary designs in all cases, and in most cases, adequate for final designs. These methods deal primarily with the dynamic loadings imposed by internal explosions. The design methods supplement material presented in chapters of this manual. Again, in case of conflict, this manual takes precedence.

6-24.2.4 Structural Details.

Each suppressive shield used for ammunition manufacturing and other hazardous operations will have specific requirements for utility penetrations, and doors for personnel, equipment, and products. Guidance on the provision of acceptable structural details such as these is presented in Chapter VI of HNDM 1110-1-2 along with information on structural details which have been successfully proof-tested.

6-24.2.5 Economic Analysis.

The design of a facility entails the need to ascertain the most cost effective configuration from among a set of workable design alternatives. All will be designed to provide the desired level of reliability and safety, and the selection of one over another will be based primarily on dollar costs. The economic analysis of alternative facility design is a complex process unique to each facility. Chapter VII of HNDM 1110-1-2 illustrates the many factors that must be considered.

6-24.2.6 Assuring Structural Quality.

In the design of suppressive shields, specifications for the quality of the basic material is paramount. The strength of welds and concrete components are also determining factors in the overall strength of the structure. Chapter VIII of HNDM 1110-1-2 provides the guidance which outlines a quality assurance program for suppressive shield design packages.

Included in Appendix A of HNDM 1110-1-2 is a detailed description of the safety approved suppressive shields and guidance concerning acceptable modifications. Copies of the fabrication drawings for each approved shield design are included along with direction for ordering full-size copies. Appendix B of that manual includes response charts for use in preliminary design. The charts are based on the combined short duration shock load and infinite duration quasi-static load, along with an undamped elastic-plastic responding structure.

6-25 DESIGN CRITERIA.

Design criteria for use of suppressive shields, or suppressive shielding panels, are very dependent on specific applications in protective structures. These criteria may include complete suppression of fragmentation effects, both primary and secondary; attenuation of blast overpressures and impulses to specified levels of specific distances from the shield or shield panels; attenuation of fireball radiation; or even essentially complete suppression of all of these effects.

Suppressive shields may or may not present reasonable or cost effective solutions to specific design problems in protective structures. Generally, they have appeared attractive when fragment hazards are severe and when potentially explosive sources are rather concentrated. The safety-approved shields protect against effects as limited as small trays of detonators, and as severe as a large melt kettle in a HE melt-pour operation containing several thousand pounds of explosive. The designer should consider their use, and use the methods presented in HNDM 1110-1-2 to evaluate their efficacy, compared to other types of protective structures discussed in this manual.

No general design criteria can be given here because the criteria for different operations or plants, and available real estate, differ too widely. In each specific protection design contract, the AE should be provided with quite detailed design criteria, in addition to general regulations which fix safety criteria such as AMCR 385-100. Both the specific and more general criteria must be evaluated when deciding whether or not suppressive shields will be useful in the facility design.

6-26 DESIGN PROCEDURES.

6-26.1 Space Requirements.

Once the operation requiring suppressive shields has been identified, consideration must be given to the size and shape of the equipment needed to perform the operation and the work space required inside the shield. These factors necessarily provide the designer with an estimate of the size and shape of the shield required. Additionally, space available on the line or in the building will place limitations on the overall shield base dimensions and height.

6-26.2 Charge Parameters.

A principal factor in the selection of a shield which will govern the shield requirements is the establishment of the charge parameters for any specific application. The charge parameters are: charge weight (W), shape, confinement, and composition; ratio of charge weight to shield internal chapter (W/V); and scaled distance (Z) from the charge to the nearest wall or roof of the shield. ($Z = R/W^{1/3}$), where R is the distance from the center of the charge to the nearest wall or roof in feet and W is the charge weight in pounds. These parameters for approved shield groups are summarized in Table 6-6 (+). New shield designs can be developed for individual needs.

6-26.3 Fragment Parameters.

Another key factor in the procedure a designer follows in the selection of an approved design or the design of a new concept is the suppression of primary and secondary fragments generated by the detonation of explosives or munitions. Much of the material in HNDM 1110-1-2 for fragment perforation of spaced plates has been adapted to Chapter 5 of this manual.

6-26.4 Structural Details.

Suppressive shields used for ammunition manufacturing and other hazardous operations require provisions for gaining access to the operation being protected. Personnel must be able to enter the shield to accomplish routine and emergency maintenance and clean-up and other essential operations. An opening of sufficient size must be provided to enable the installation or removal of equipment in realistically large subassemblies. Openings for conveyors and chutes must also be provided and properly configured to prevent excessive pressure and fragments from escaping. Provisions must be made to provide all utilities and satisfy all environmental conditioning needs which may be essential to the operations inside the shield.

Utility penetrations, ventilating and air-conditioning ducts, and vacuum lines must not diminish the overall protective capability of the shield. They must not alter the basic mode of structural failure of the suppressive shield and should be small compared to the general size of the shield.

Operations that produce explosive dust may require the use of liners both inside and outside the shield to prevent the accumulation of dust within shield panels. With configurations such as the Group 5 shield, which is primarily designed for use with propellants or pyrotechnic materials, liners must not inhibit the venting characteristics of the shield.

Utility lines passing through suppressive shields are vulnerable to both air blast and fragment hazards. The air blast could push unprotected utility penetrations through the walls of the shield and create secondary fragments. Fragments from an accidental explosion could perforate the thin walls of an unprotected utility pipe and escape from the shield. To eliminate the threat of air blast and fragments, a protective box is used to cover the area where the utility lines pass through the shield wall. The box is configured to rest on the inside surface of the shield and is welded to the shield. The size of the wall penetrations is limited to that required for the utilities. Each pipe is bent at a right angle inside the shield within the protective box. The penetrations of the shield wall are reinforced with a sleeve or box section welded to the shield panel through which the utility line passes. The penetration box is designed to maintain the structural integrity of the shield area penetrated. A typical protective box design is shown in Figure 6-23 (+).

The cover plate thickness is selected to stop the worst case fragment.

Typical penetrations for approved safety design suppressive shields are illustrated in Figure 6-24 (+) and Figure 6-25 (+), and a vacuum line penetration is illustrated in Figure 6-26 (+).

6-26.5 Access Penetrations.

In the munitions plant environment, suppressive shields are designed to protect Category I or II hazardous operations as defined in MIL STD 882A. Remote operation may be required so personnel will not be inside the shield during operations. However, personnel access is required to allow for maintenance, repair, and inspection. Further, these doors must provide large openings to enable most equipment to be installed or removed in large subassemblies.

Access is also required for munitions components, explosives, and assembled munitions to pass through the suppressive shield. In the case of conveyor transporting systems, consideration must be given to the proper pass-through of the conveyor. Requirements for this type of access depend on the configuration of the munitions product, transporting pallets, and conveyors, as well as production rates and other factors unique to each operation. For these reasons, definition of specific design requirements is not possible.

6-26.5.1 Personnel Door.

Three different types of doors have been developed for use in suppressive shields: sliding, hinged, and double leaf. The hinged door was designed to swing inward. This feature reduces the usable space inside the shield. A sliding door is preferred for personnel access to munitions operations. Figure 6-27 (+) illustrates a typical sliding door. This type door is used with the Group 4, 5, and Milan 81 mm shields. The sliding door consists of an entire shield panel suspended from a monorail system. The panel is inside the shield and is not rigidly attached to the column members. Special consideration was given to the air gap between the door panel and the column to assure that excessive pressure leakage would not occur and that fragments could not pass through the gap.

The cylindrical Group 3 shield contains a two-leaf door, hinged at each side. It swings inward as shown in Figure 6-28 (+). The door is curved to match the shield wall contour and is fabricated from S5 x 10 I-beams. Pressure loading restraint is provided by the door bearing on the external support rings of the shield at the top and bottom of the door. An external latch provides restraint during rebound of the door.

6-26.5.2 Product Door.

Only one type of product door has been developed conceptually for use in suppressive shields. It is the rotary, three-lobed configuration shown in Figure 6-29 (+). The design procedure for this door is described to illustrate the type of analysis required. It can be used as a guide for analysis of similar alternate design concepts for product doors.

The air blast will most severely load the rotating product door when the munitions opening is coincident with the pocket in the rotary door. A nonoverriding clutch prevents the door from counter-rotating. The angular impulsive load is:

$$Ti = i_r A_d r_d \qquad 6\text{-}32$$

where

T_i = *angular impulsive load*
i_r = *reflected impulse*
A_d = *door area*
r_d = *radius from center of impulse load to the center of door rotation*

Assuming the product door to be initially at rest, the rotational velocity imparted to the door is given by:

$$w_i = T_I / I_m \qquad 6\text{-}33$$

where

ω = *angular velocity*
I_m = *mass moment of inertia of the door about shaft axis*

The kinetic energy imparted to the door is given by:

$$KE = \frac{I_m \omega^2}{2} = \frac{T_i^{\,2}}{2I_m} \qquad 6\text{-}34$$

The strain energy absorbed by a circular shaft is given by:

$$U_s = \frac{\pi L_s}{4G}\left(r_s \tau_s\right)^2 \qquad 6\text{-}35$$

where

U_s = *strain energy*
L_s = *length of the shaft*
G = *shear modulus of the shaft material*

r_s = *radius of the shaft*
τ_s = *maximum shear stress in the shaft*

Equating the kinetic energy of the rotating door to the strain energy in the shaft and solving for the shear stress yields:

$$\tau_s = \frac{T_i}{r_s}\left[\frac{2G}{\pi d_m L_s}\right]^{1/2} \qquad \text{6-36}$$

The computed shear stress in the shaft must be less than the dynamic shear stress of the shaft material, i.e.,:

$$s < 0.55\, f_{dy} \qquad \text{6-37}$$

Figure 6-22a General Configuration of Suppressive Shield Groups

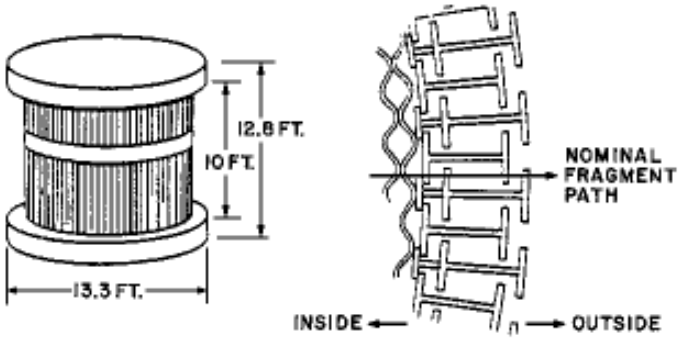

SUPPRESSIVE SHIELD GROUP 3
(GROUPS 1 & 2 ARE SIMILAR, BUT MUCH LARGER, AND HAVE THREE EXTERNAL RINGS)

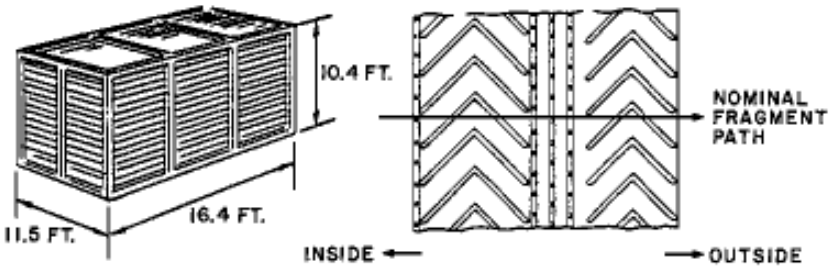

SUPPRESSIVE SHIELD GROUP 4

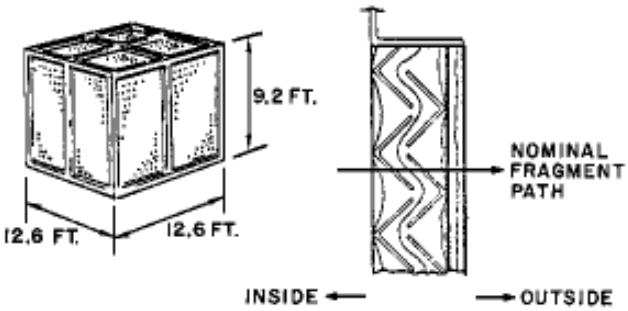

SUPPRESSIVE SHIELD GROUP 5

Figure 6-22bGeneral Configuration of Suppressive Shield Groups (continued)

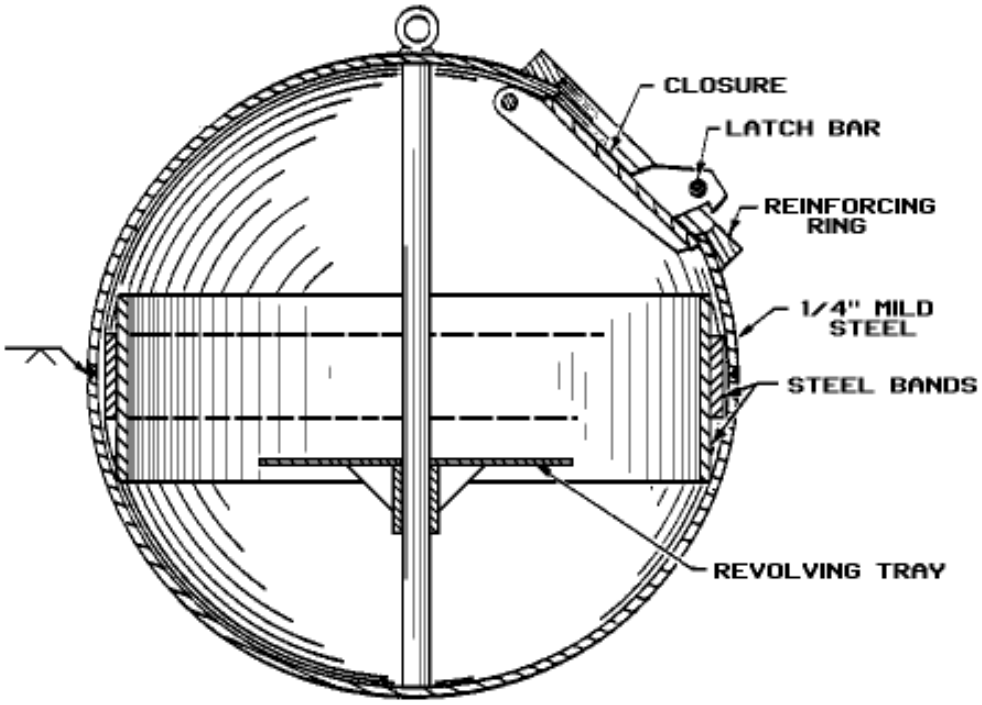

SUPPRESSIVE SHIELD GROUP 6

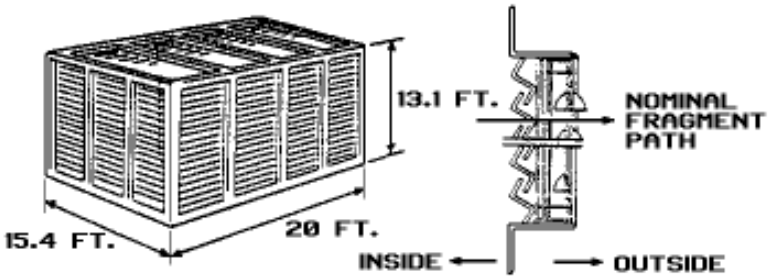

SUPPRESSIVE SHIELD GROUP 81 mm

Figure 6-23 Typical Utility Penetration

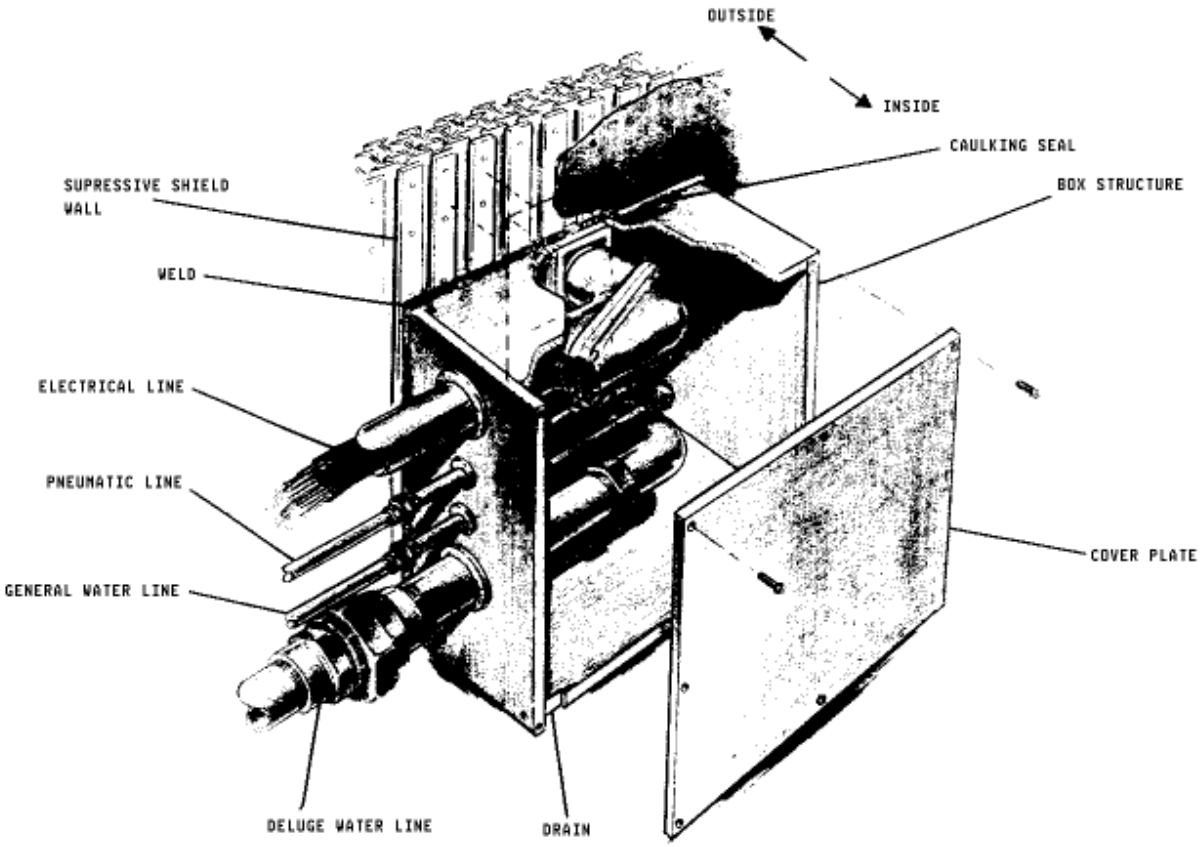

Figure 6-24 Typical Location of Utility Penetration in Shield Groups 4, 5 and 81mm

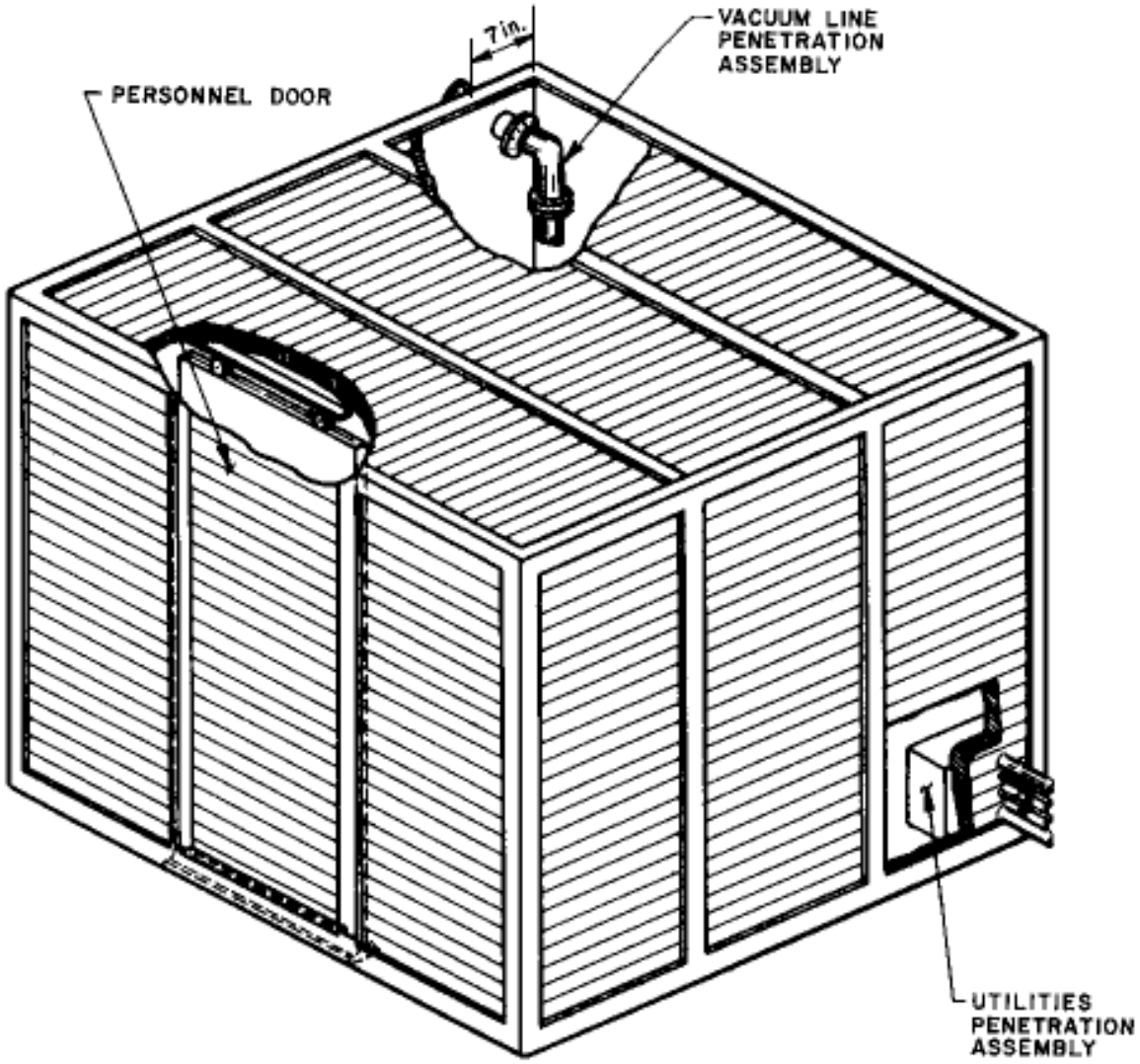

Figure 6-25 Typical Location of Utility Penetration in Shield Group 3

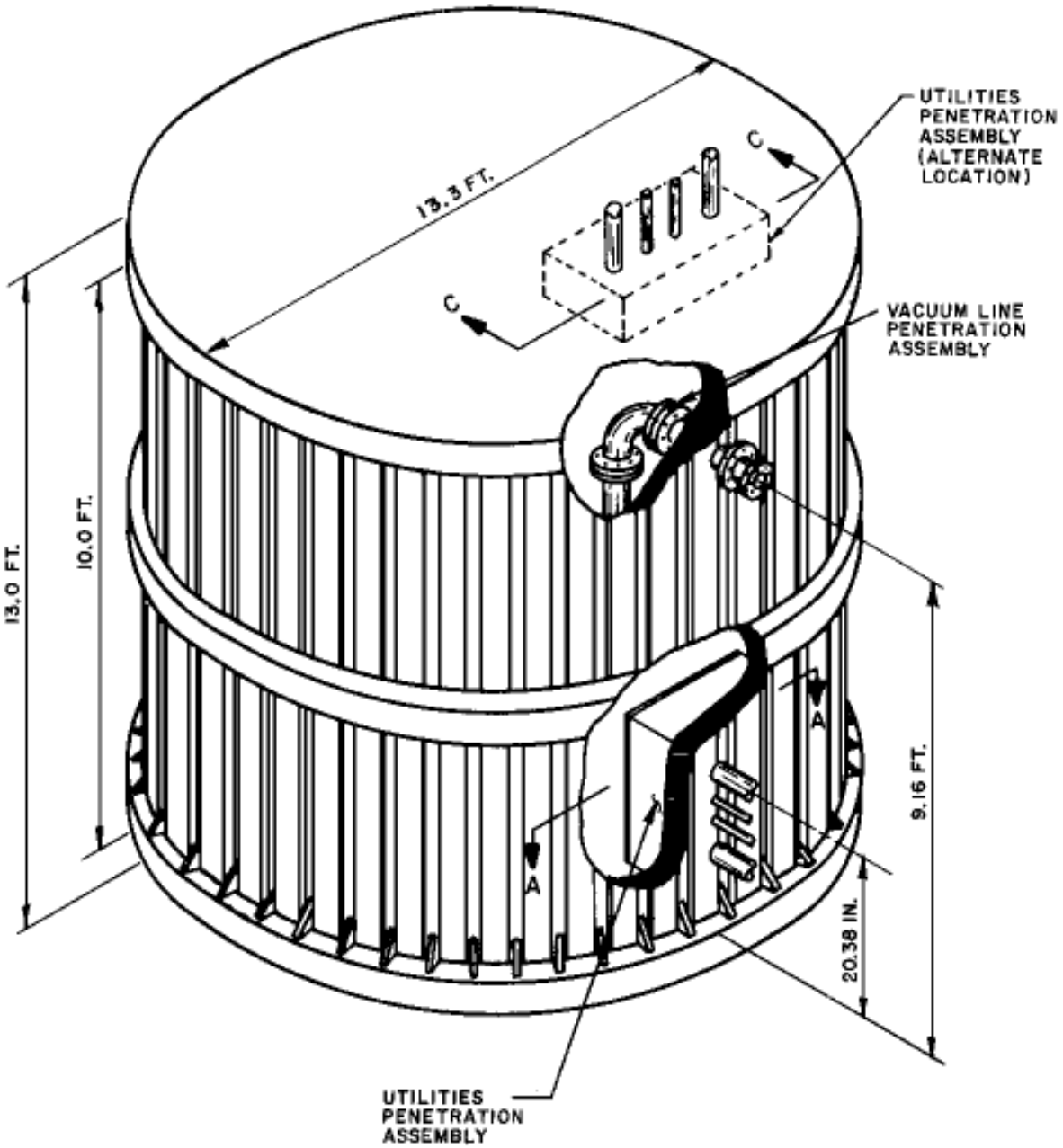

Figure 6-26 Typical Vacuum Line Penetration

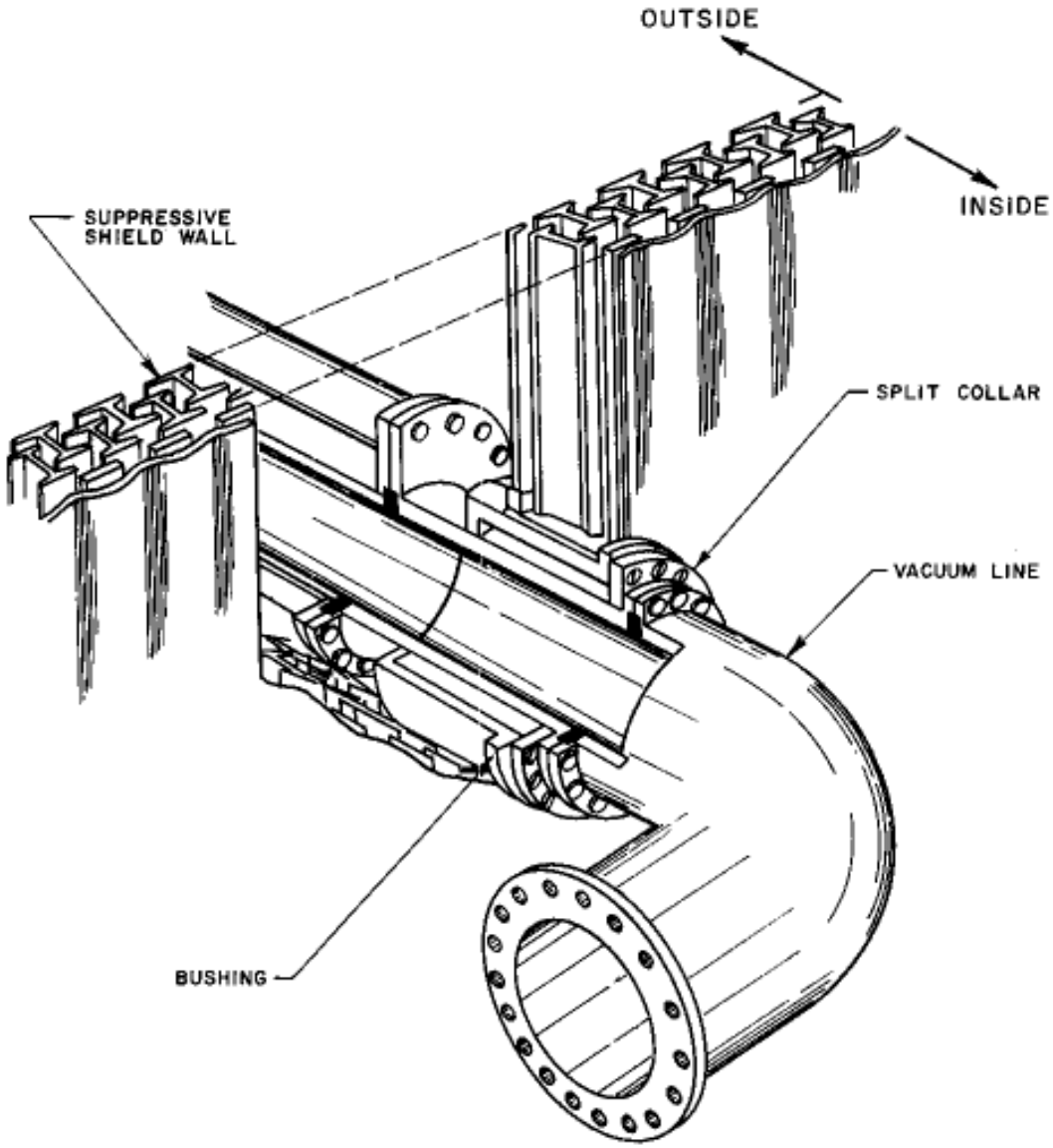

Figure 6-27 Sliding Personnel Door

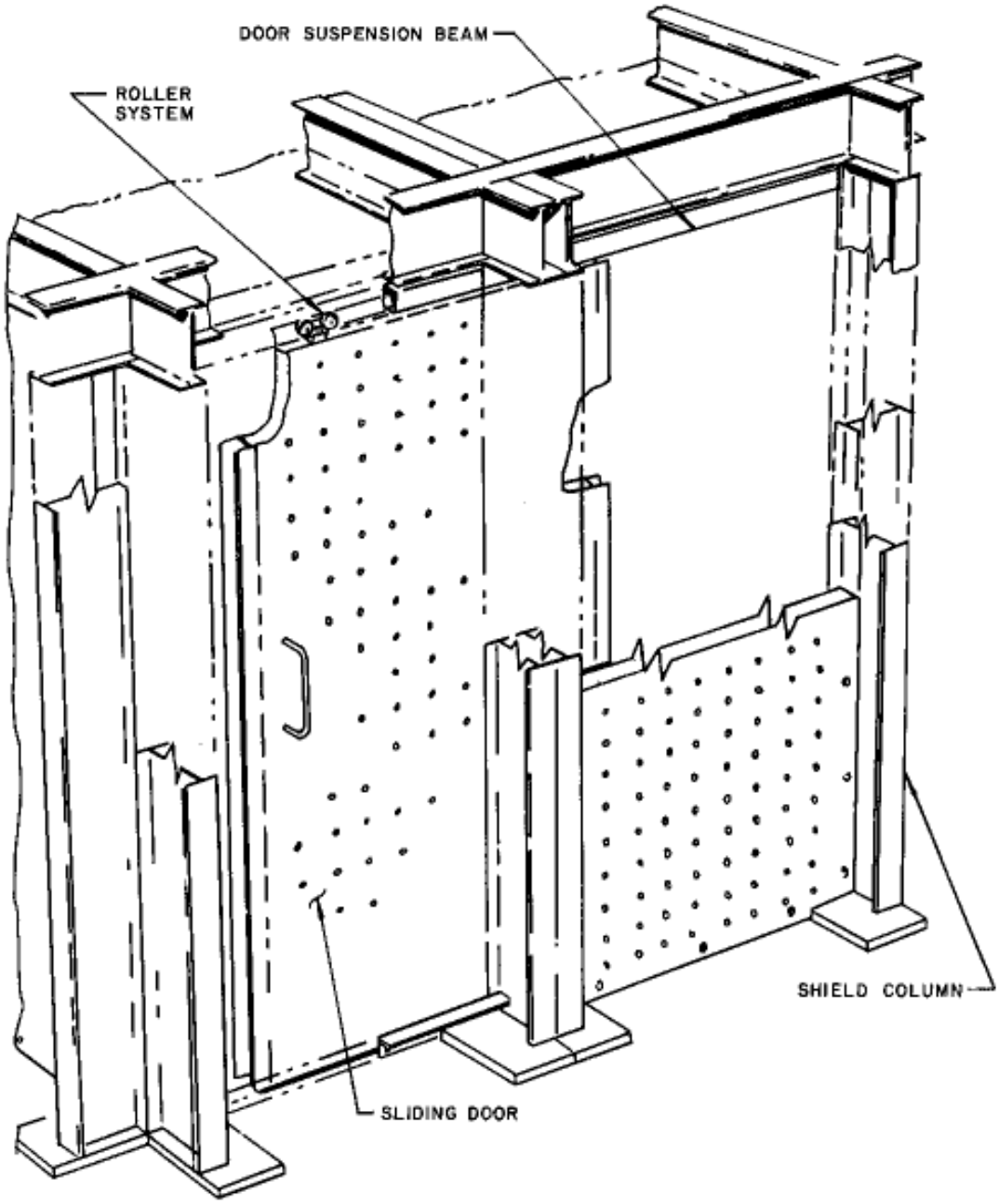

Figure 6-28 Door – Group 3 Shield

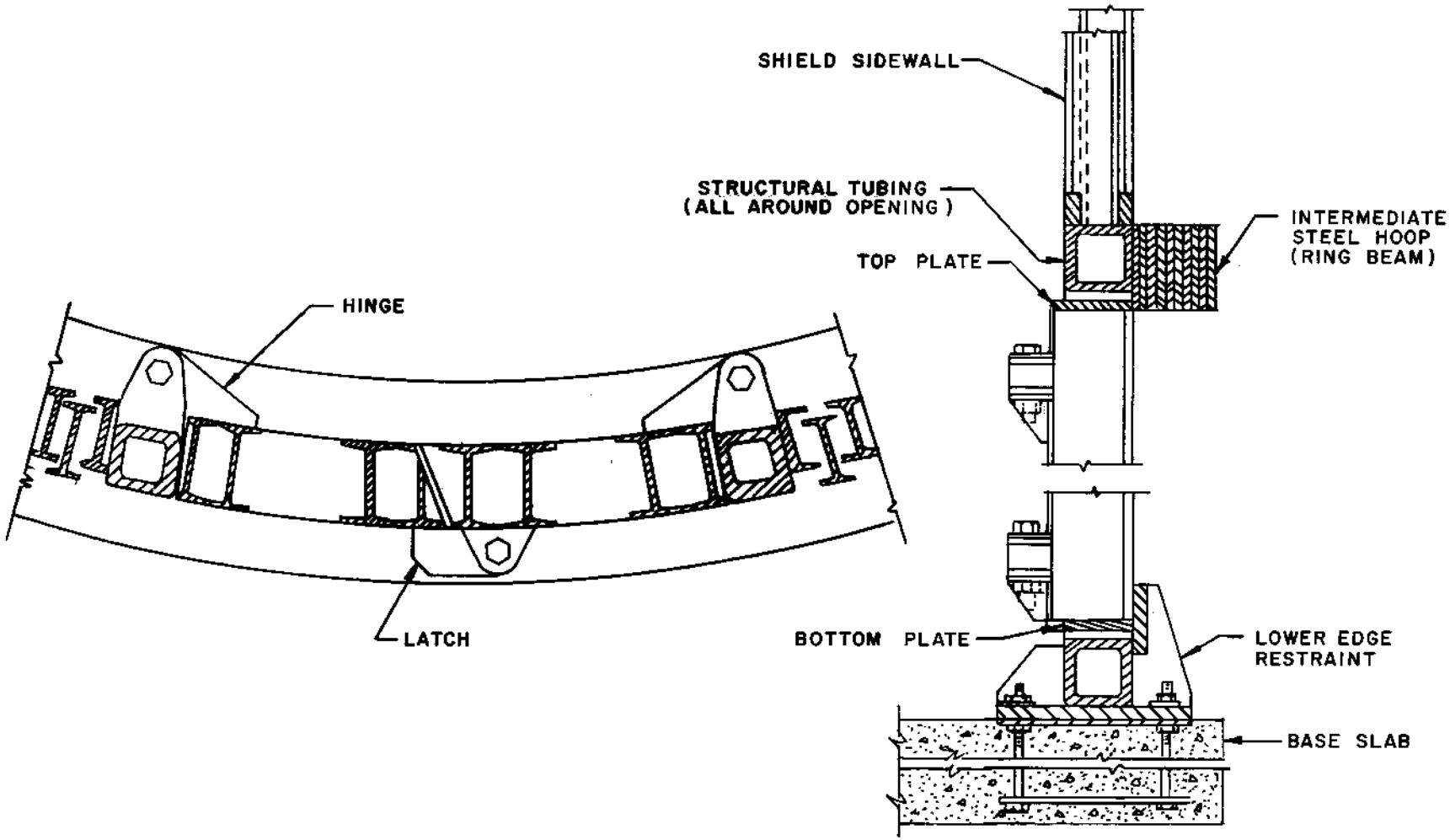

Figure 6-29 Rotating Product Door

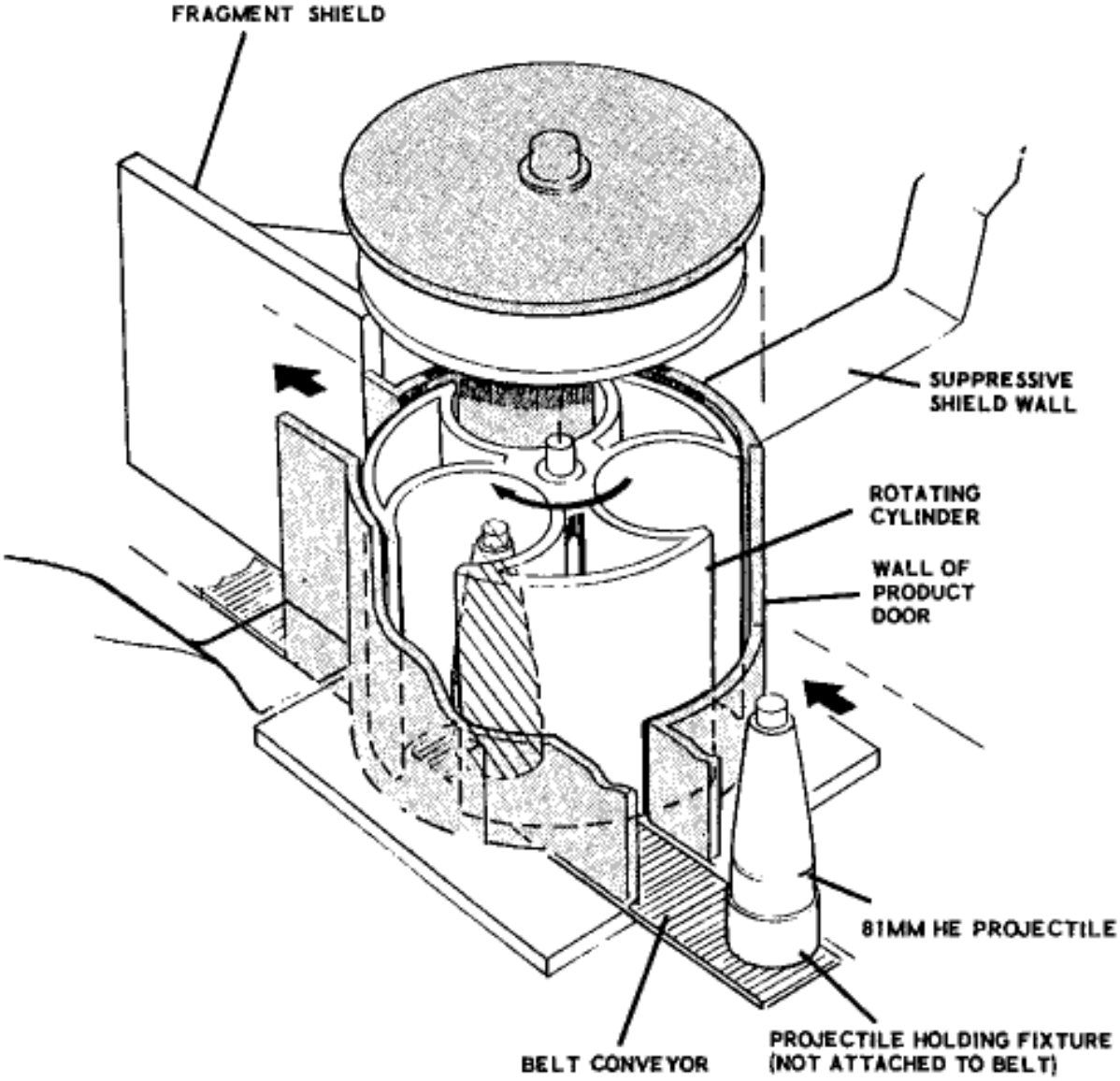

Table 6-5 Summary of Suppressive Shield Groups

SHIELD GROUP	HAZARD PARAMETER		REPRESENTATIVE APPLICATIONS	LEVEL OF PROTECTION *
	BLAST	FRAGMENTATION		
1	High	Severe	Porcupine Melter (2000 lbs) plus two pour units 250 lbs each	Reduce blast pressure at intraline distance by 50 percent
2	High	Severe	HE Bulk (750 lb) Minute melter	Reduce blast pressure at intraline distance by 50 percent
3	High	Moderate	HE Bulk (37 lb) Detonators, fuses	Category I hazard 6.2 feet from shield
4	Medium	Severe	HE Bulk (9 lb) Processing rounds	Category I hazard 19 feet from shield
5	Low	Light	30 lb Illuminant Igniter slurry mixing HE processing (1.84 lb)	Category I hazard 3.7 feet from shield
6	Very High	Light	Laboratory, handling, and transportation	Category I hazard at 1 foot from shield
7	Medium	Moderate	Flame/fireball attenuation	Category I hazard at 5 feet from shield
81 mm	High	Moderate	81 mm mortar drill-and-face and/or cast-finishing operation	Category I hazard at 3 feet from shield

* All shield groups contain all fragments

Table 6-6 Charge Parameters for Safety Approved Shields

MINIMUM *Z* (ft/lb$^{1/3}$)			
SHIELD GROUP	**WALL**	**ROOF**	**MAXIMUM *W/V* (lb/ft^3)**
3	1.63	1.45	0.04157
4	2.23	2.19	0.00762
5	4.14	6.79	0.00215
6A	1.01	N/A	0.22970
6B	1.22	N/A	0.13200
Prototype 81 mm *	3.62	3.21	0.00340
Milan 81 mm *	4.23	3.75	0.00280

* See Figure 6-22 (+/+)

BLAST RESISTANT WINDOWS

6-27 INTRODUCTION.

Historical records of explosion effects demonstrate that blast-propelled glass fragments from failed windows are a major cause of injuries from accidental explosions. Also, failed window glazing often leads to additional injuries as blast pressure can enter interior building spaces and subject personnel to high pressure jetting, incident overpressure, secondary debris impact, and thrown body impact. These risks are heightened in modern facilities, which often have large areas of glass.

Guidelines are presented for both the design, evaluation, and certification of windows to safely survive a prescribed blast environment described by a triangular-shaped pressure-time curve. Window designs using monolithic (unlaminated) thermally tempered glass based on these guidelines can be expected to provide a probability of failure equivalent to that provided by current safety standards for safely resisting wind loads.

Guidelines are presented in the form of load criteria for the design of both the glass panes and framing system for the window. The criteria account for both the bending and membrane stresses and their effect on maximum principle stresses and the nonlinear behavior of glass panes. The criteria cover a broad range of design parameters for rectangular-shaped glass panes. Design charts are presented for monolithic thermally tempered glazing with blast overpressure capacity up to 100 psi, an aspect ratio of 1.00 $\leq a/b \leq$ 4.00, pane area 1.0 $\leq ab \leq$ 25 ft^2, and nominal glass thickness 1/4 $\leq t \leq$ 3/4 inches. An alternate method for blast capacity evaluation by calculation is also presented. This can be used to evaluate the blast capacity of glass when interpolation

between charts is unadvisable, when design parameters are outside the limits of the chart, and to calculate rebound loads. Presently, the design criteria are for blast-resistant windows with thermally treated, monolithic tempered glass. Further research is required to extend these design criteria to laminated tempered glass.

6-28 BACKGROUND.

The design criteria cover monolithic tempered glass meeting the requirements of Federal Specifications DD-G-1403B and DDG-451d. Additionally, thermally tempered glass must meet the minimum fragment weight requirements of ANSI Z97.1-1984, Section 5.1.3(2).

Annealed glass is the most common form of glass available today. Depending on manufacturing techniques, it is also known as plate, float or sheet glass. During manufacture, it is cooled slowly. The process results in very little, if any, residual compressive surface stress. Consequently, annealed glass is of relatively low strength when compared to tempered glass. It has large variations in strength and fractures into dagger-shaped, razor-sharp fragments. For these reasons, annealed glass is not recommended for use in blast resistant windows.

Thermally tempered glass is the most readily available tempered glass on the market. It is manufactured from annealed glass by heating to a high uniform temperature and then applying controlled rapid cooling. As the internal temperature profile relaxes towards uniformity, internal stresses are created. The outer layers, which cool and contract first, are set in compression, while internal layers are set in tension. As it is rare for flaws, which act as stress magnifiers, to exist in the interior of tempered glass sheets, the internal tensile stress is of relatively minimal consequence. As failure originates from tensile stresses exciting surface flaws in the glass, precompression permits a larger load to be carried before the net tensile strength of the tempered glass pane is exceeded. Tempered glass is typically four to five times stronger than annealed glass.

The fracture characteristics of tempered glass are superior to those of annealed glass. Due to the high strain energy stored by the prestress, tempered glass will eventually fracture into small cubical-shaped fragments instead of the razor-sharp, dagger-shaped fragments associated with the fracture of annealed glass. Breakage patterns of side and rear windows in American automobiles are a good example of the failure mode of thermally or heat-treated tempered glass.

Semi-tempered glass is often marketed as safety or heat-treated glass. However, it exhibits neither the dicing characteristics upon breakage nor the higher tensile strength associated with fully tempered glass; therefore, it is not recommended for blast resistant windows.

Another common glazing material is wire-reinforced glass, annealed glass with an embedded layer of wire mesh. Its only use is as a fire-resistant barrier. Wire glass has the fracture and low strength characteristics of annealed glass and, although the wire

binds fragments, it contributes metal fragments as an additional hazard. Wire glass is never recommended for blast resistant windows.

6-29 DESIGN CRITERIA FOR GLAZING.

6-29.1 Specified Glazing.

The design of blast-resistant windows is currently restricted to heat-treated, fully-tempered glass in fixed or non-openable frames meeting both Federal Specification DD-G1403B and ANSI Z97.1-1984. Tempered glass meeting only DD-G-1403B may possess a surface precompression of only 10,000 psi. At this level of precompression, the fracture pattern is similar to annealed and semi-tempered glass. Tempered glass meeting the minimum fragment specifications of ANSI Z97.1-1984 (Section 5.1.3(2)) has a higher surface precompression level and tensile strength, which improves the capacity of blast-resistant windows and results in smaller, cubical-shaped fragments on failure.

Although thermally tempered glass exhibits the safest failure mode of any glass, failure under blast loading still presents a significant health hazard. Results from blast tests reveal that on failure, tempered glass fragments may be propelled in cohesive clumps that only fragment on impact into smaller rock-salt-shaped fragments. Even if the tempered glass initially breaks into small fragments, sufficient velocities may still be imparted by the blast loading to cause severe hazards to personnel. Because the expected geometry of glass fragments involve multiple, potentially sharp corners, a high probability of injury would result from application of the 58 ft-lb criterion for acceptable kinetic energy. Because of these hazards to personnel, blast-resistant glazing should be designed to survive expected loads.

6-29.2 Design Stresses.

The design stress, the maximum principal tensile stress allowed for the glazing, f_{un}, is set at 16000 psi. This correlates with a probability of failure equal to or less than 0.001. The design stress for blast-resistant glazing is slightly higher than that commonly used in the design of one-minute wind loads, but, it is justified because of the expected, significantly shorter, duration of loading.

6-29.3 Dynamic Response to Blast Load.

An analytical model was used to predict the blast load capacity of annealed and tempered glazings. Characteristic parameters of the model are illustrated in Figure 6-30 (+).

The glazing is a rectangular, fully thermally tempered glass plate having a long dimension, a; a short dimension, b; a thickness, t; a Poisson ratio, $\nu = 0.22$; and an elastic modulus, $E = 1 \times 10^6$ psi. The plate is simply supported along all four edges, with no inplane and rotational restraints at the edges. The bending stiffness of the support elements is assumed to be infinite relative to the pane. Recent static and blast load

tests indicate that the allowable frame member deflections of 1/264th of the span will not significantly reduce pane resistance from that predicted for an infinitely stiff frame.

The blast pressure loading is described by a peak triangular-shaped pressure-time curve as shown in Figure 6-30 (+). The blast pressure rises instantaneously to a peak blast pressure, *B*, and then decays linearly with a blast pressure duration, *T*. The pressure is uniformly distributed over the surface of the pane and applied normal to the pane.

The resistance function, $r(X)$ (static uniform load, r as a function of center deflection, X) for the plate accounts for both bending and membrane stresses. The effects of membrane stresses produce a nonlinear stiffness of the resistance-deflection function (Figure 6-30 (+)). The design deflection, X_u is defined as the center deflection where the maximum principle tensile stress at any point in the glass first reaches the design stress, f_{un}, of 16,000 psi. Typically, as the deflection of the plate exceeds a third of its thickness, the points of maximum stress will migrate from the center and toward the corners of the plate.

The model, illustrated in Figure 6-30 (+), uses a single-degree-of-freedom system to simulate the dynamic response of the plate. To be conservative, no damping of the window pane is assumed. The model calculates the peak blast pressures required to exceed the prescribed probability of failure. The model assumes that failure occurs when the maximum deflection exceeds ten times the glazing thickness. This restricts solutions to the valid range of the Von Karmen plate equations while preventing edge disengagement of the plate.

6-29.4 Design Charts.

Charts are presented in Figure 6-31 (+/+) to Figure 6-51 (+/+) and Table 6-6 (+) to Table 6-12 (+/+/+/+/+/+/+) for the design and evaluation of glazing to survive a prescribed blast loading with a probability of failure no greater than 0.001. The charts relate the peak blast overpressure capacity of thermally tempered glazing to all combinations of the following design parameters: a/b = 1.00, 1.25, 1.50, 1.75, 2.00, 3.00, and 4.00; $1.00 \leq ab \leq 25$ ft^2; $12 \leq b \leq 60$ inches; $2 \leq T \leq 1{,}000$ msec; and t = 1/4, 5/16, 3/8, 1/2, 5/8, and 3/4 inches (nominal). Thermally tempered glass up to 3/4 inch thick can easily be purchased in the United States. Thickness greater than 3/4 inch can only be obtained by lamination, but, research and blast load testing are required to develop approved designs for laminated glass.

The charts are based on the minimum thickness of fabricated glass allowed by Federal Specification DD-G-451d (see Table 6-8 (+)). They are created by numerically integrating the equations of motion of a single-degree-of-freedom system as modeled in Figure 6-30 (+). A Wilson-Theta technique was employed with a time step corresponding limited to 1/25th of each of the five increasing linear resistances used to model the resistance function.

6-29.5 Alternate Design Procedure.

Design procedures in this section can be used to evaluate the blast capacity of monolithic tempered glass when interpolation between charts is unadvisable, when design parameters are outside the limits of the chart, or to calculate rebound loads. It is recommended that the design charts be used for initial guesses of required glass thickness.

Procedures to calculate resistance, r_u, (Table 6-7 (+/+/+/+/+/+/+) deflection, X_u, effective static resistance, r_{eff}, effective pane stiffness, K_e, and the period of vibration, T_N follow. The response charts can be used with these parameters to determine dynamic response. Table 6-12 (+/+/+/+/+/+/+) reports the fundamental period of vibration and Table 6-13 (+/+/+/+/+/+/+) reports the effective elastic, static resistance for most dimensions of glass panes. In many cases these values and the single equation in Step 10 below can be used to directly compute blast overpressure capacity.

Step 1. Determine if the glass pane will behave as a linearly responding plate under the design load. If the ratio of the short side of the plate, *b*, to its actual (not nominal) thickness is less than the maximum in the second column of Table 6-9 (+), then simple formulas can be used for parameters needed to use the response charts. Only glass panes above and to the left of the steeped line in Table 6-7 (+/+/+/+/+/+/+) will qualify. If the glass pane has a *b*/*t*-ratio less than that specified in Table 6-9 (+), the glass will behave in a nonlinear manner with the membrane stresses induced by straining of the neutral plane or axis of the plate. Proceed to Steps 2-9 to determine key parameters for this nonlinear plate behavior.

For glass plates that respond linearly, the design static resistance and the effective elastic resistance are:

$$r_{eff} = r_u = C_r (t/b)^2 \, psi \qquad \text{6-38a}$$

The center deflection is:

$$X_u = C_D \, (b^2/t) \qquad \text{6-38b}$$

Coefficients for computing the effective resistance, C_r, and the center deflection, C_D, are listed in Table 6-9 (+).

The fundamental period of vibration is:

$$T_N = C_T \, (b^2/t) \qquad \text{6-39}$$

Coefficient C_T is reported in the last column of Table 6-9 (+). Proceed to Step 10 to determine blast capacity.

Step 2 For nonlinear behavior with the *b*/*t*-ratio greater than specified in column 2 of Table 6-9 (+), determine the nondimensional design stress, S_{SD}, as:

$$S_{ND} = 0.0183\ (b/t)^2 \qquad 6\text{-}40$$

where:

b = *short span of glass measured between center lines of the gaskets (inches)*
t = *actual thickness of glass, from Table 6-8 (+) (inches)*

For values of *a*/*b* greater than 4, use *a*/*b* = 4.

Step 3 Enter Figure 6-52 (+) with the values of S_{ND} and *a*/*b* to determine the nondimensional design load, L_{ND}.

Step 4 Compute static design resistance as:

$$r_u = 876{,}000\ (L_{ND})(t/b)^4 \text{ psi} \qquad 6\text{-}41$$

Use this value for frame design calculations other than those for rebound. Use r_{eff} defined in Step 7 for the rebound phase.

Step 5 Use *a*/*b* and L_{ND} in Figure 6-53 (+) to obtain the nondimensional deflection, *X*/*t*. If *X*/*t* exceeds 10, use the value of L_{ND} corresponding to an *X*/*t* of 10 and recalculate r_u using Figure 6-52 (+).

Step 6 Determine center deflection of the glass pane as:

$$X_u = (X/t)t, \text{ inches} \qquad 6\text{-}42$$

Step 7 Determine the effective elastic, static design resistance as:

$$r_{eff} = 0.4\ (r_1 + r_2 + r_3 + r_4 + 0.5r_u) \text{ psi} \qquad 6\text{-}43$$

where:

r_1 = *resistance at 0.2* X_u
r_2 = *resistance at 0.4* X_u
r_3 = *resistance at 0.6* X_u

r_4 = *resistance at 0.8* X_u
r_u *obtained in Step 4*
X_u *obtained in Step 6*

Figure 6-52 (+) and Figure 6-53 (+) should be used for r_1 through r_4. The equivalent static design load is the resistance that a linearly responding plate would exhibit at the same strain energy as the nonlinearly responding plate at the design center deflection X_u. It is always less than r_u. By this technique, the linear response charts can be used with reasonable accuracy.

Step 8 Determine effective stiffness as:

$$K_E = r_{eff}/X_u, \text{ psi/in} \qquad 6\text{-}44$$

Step 9 Determine the fundamental period of vibration as:

$$T_N = 2\pi (K_{LM}\, m / K_E)^{1/2}, \text{ msec} \qquad 6\text{-}45$$

where:

$K_{LM} = 0.63 + 0.16(a/b - 1)$ $\quad 1 \leq a/b \leq 2$
$K_{LM} = 0.79$ $\quad a/b > 2$

The unit mass, m, of the glass is:

$$m = 233t, \text{ lb-ms}^2/\text{in}^3$$

Step 10 Use Figure 3-49 (+) of Chapter 3 with the ratio of load duration to period of vibration, T/T_N, to obtain the dynamic load factor, D_{LF}. The blast overpressure capacity of the glass pane is:

$$B = r_{eff}/D_{LF} \qquad 6\text{-}46$$

For T/T_N ratios greater than 10, set D_{LF} equal to 2. For ratios less than 0.05, set D_{LF} equal to 0.3.

6-30 DESIGN CRITERIA FOR FRAMES.

6-30.1 Sealants, Gaskets, and Beads.

All gaskets or beads must be at least 3/8 inch wide with a Shore "A" durometer hardness of 50 and conform to ASTM Specification C509-84 (Cellular Elastomeric Preformed Gasket Sealing Material). The bead and sealant must form a weatherproof seal.

6-30.2 Glazing Setting.

Minimum frame edge clearances, face clearance, and bite (Figure 6-54 (+)) are specified in Table 6-8 (+).

6-30.3 Frame Loads.

The window frame must develop the static design strength, r_u of the glass pane (Table 6-7 (+/+/+/+/+/+/+)). Otherwise, failure will occur at less than the predicted blast pressure capacity of the window pane. This results from the frame deflections which induce higher principal tensile stresses in the pane, thus reducing the strain energy capacity available to resist the blast loading.

In addition to the load transferred to the frame by the glass, frame members must also resist the static design load, r_u, applied to all exposed members. Maximum allowable limits for frame design are:

1. Deflection: Relative displacements of frame members shall be the smallest of 1/264th of its span or 1/8 inch.
2. Stress: The maximum stress in any member shall not exceed f_m /1.65, where f_m is the yield stress of the member's material.
3. Fasteners: The maximum stress in any fastener shall not exceed f_m /2.00.

The design loads for the glazing are based on large deflection theory, but the resulting design loads transferred to the frame are based on small deflection theory for normally loaded plates. Analysis indicates this approach to be considerably simpler and more conservative than using the frame loading based exclusively on large deflection plate behavior, characteristic of window panes. The effect of the static design load, r_u, applied directly to the exposed frame members of width, w, should also be considered.

The design load, r_u, produces a line shear, V_x, applied by the long side, a, equal to:

$$V_x = C_x\, r_u\, b \sin(\pi x/a) + r_u\, w,\ lb/in \qquad 6\text{-}47$$

The design load, r_u, produces a line shear, V_y, applied by the short side, b, equal to:

$$V_y = C_y\, r_u\, b \sin(\pi y/a) + r_u\, w,\ lb/in \qquad 6\text{-}48$$

The design load also produces a corner concentrated load, R, tending to uplift the corners of the window pane equal to:

$$R = C_R\, r_u\, b^2,\ lb \qquad 6\text{-}49$$

Distribution of these forces are illustrated in Figure 6-55 (+). Table 6-10 (+) presents design coefficients, C_x, C_y, and C_R for practical aspect ratios. Linear interpolation can be used for aspect ratios not shown.

Although frames with mullions are included in the design criteria, it is recommended that single pane frames be used. Experience indicates that mullions complicate the design and reduce the reliability of blast-resistant frames. If mullions are used, the certification test must be conducted as the complexity of the mullion cross sections may cause some of the assumptions to be unconservative for local shear and stress concentrations. Also, economic analysis indicates that generally thicker glass will be more cost effective than the more complex mullion frame. If mullions are used, the loads from Equations 6-55 to 6-57 should be used to check the frame mullions and fasteners for compliance with deflection and stress criteria. Note that the design load for mullions is twice the load given by Equations 6-53 to 6-55 to account for the effects of two panes supported by a common mullion.

Special design considerations should be taken to assure that deflection of the building wall will not impose deflections on the frame greater than 1/264th of the length of the panes edge. When insufficient wall rigidity is provided, it is recommended that the frames be pinned at the corners to provide isolation from the walls rotation.

6-30.4 Rebound.

Response to the dynamic loading will cause the window to rebound (outward deflection) after its initial positive (inward) deflection. The outward pane displacement and the stresses produced by the negative deflection must be safely resisted by the window while positive pressures act on the window. Otherwise, the window which safely resists stresses caused by inward deflections may fail in rebound while the positive pressure still acts. This can propel glass fragments into the structure. However, if the window fails in rebound during the negative phase of blast loading, glass fragments will be drawn away from the structure. Rebound will occur during the negative loading phase if the effective blast duration is no greater than one half of the natural period of vibration, T_N, of the glass pane. For $T \geq 10\ T_N$, significant rebound does not occur during the positive blast loading, so, for this situation, design for rebound is not required. For $0.5 \leq T/T_N \leq 10$, the frame must be designed for the peak negative pressure acting during the positive overpressure phase. Table 6-12 (+/+/+/+/+/+/+) reports T_N for practical glass pane dimensions.

As the rebound chart, Figure 3-268 (+) of Chapter 3, can be unconservative for predicting maximum rebound (for glass panes), dynamic analysis using numerical

integration or a more conservative simplified analysis is required. In lieu of a numerical analysis, it is conservative to set the maximum rebound load, r^-, to the static design load, r_u. The resistance function for this analysis can be generated by the Alternate Design Procedure. If the pane has a *b*/*t* ratio less than specified in Table 6-9 (+), the pane will behave as a linear plate and Equation 6-38 can be used to determine r_u, X_u, and the resistance function. If the pane has a *b*/*t* ratio larger than specified in Table 6-9, use Steps 2 through 7 to define the resistance function. The negative resistance function is a mirror image of the positive resistance function.

The portion of the frame outboard of the glass must resist the rebound load, r^-. Use Equations 6-53 to 6-55 to apply the rebound load to the frame members. In some design situations the resistance built into the member outboard of the glass to resist the corner concentrated force, *R* (Equation 6-49), during deflections of the pane inward will provide enough strength to resist rebound.

6-31 ACCEPTANCE TEST SPECIFICATION.

Certification tests of the entire window assembly are required unless analysis demonstrates that the window design is consistent with the design criteria. All window assembly designs using mullions must be tested. The certification tests consist of applying static uniform loads on at least two sample window assemblies until failure occurs in either the glass or frame. Although at least two static uniform load failure tests are required, the acceptance criteria presented below encourages a larger number of test samples. All testing should be performed by an independent testing laboratory certified by the contracting officer.

6-31.1 Test Procedure - Window Assembly Test.

The test windows (glass panes plus support frames) shall be identical in type, size, sealant, and construction to those furnished. The test frame assembly shall be secured to simulate the adjoining walls. Using either a vacuum or a liquid-filled bladder, an increasing uniform load shall be applied to the entire window assembly (glass and frame) until failure occurs in either the glass or frame. Failure shall be defined as either breaking of glass or loss of frame resistance. The failure load shall be recorded to three significant figures. The load should be applied at a rate of 0.5 r_u per minute which corresponds to approximately one minute of significant stress duration until failure. Table 6-7 (+/+/+/+/+/+/+) presents the static ultimate resistance of old tempered glass, correlated with a probability of failure, equal to 0.001 and a load duration of 1 second, whereas this criteria is for a load duration of 1 minute. This longer duration will weaken the glass by ceramic fatigue, but new glass should tend to be stronger than old glass. To account for these effects the certified static load capacity, r_s, of a glass pane is to be rated as:

$$r_s = 0.876\, r_u \qquad 6\text{-}50$$

6-31.2 Acceptance Criteria.

The window assembly (frame and glazing) are considered acceptable when the arithmetic mean of all the samples tested, *r*, is such that:

$$\bar{r} \geq r_u + s\alpha \qquad 6\text{-}51$$

where

r_u = *static ultimate resistance of the glass pane*
s = *sample standard deviation*
α = *acceptance coefficient*

For n test samples, $\bar{r}$ is defined as:

$$\bar{r} = \frac{\sum_{i-1}^{n} r_i}{n} \qquad 6\text{-}52$$

where r_i is the recorded failure load of the ith test sample. The standard sample deviation, *s*, is defined as:

$$s = \left[\sum_{i=1}^{n} \frac{\left[r_i - \bar{r}\right]^2}{(n-1)} \right]^{1/2} \qquad 6\text{-}53$$

The minimum value of the sample standard deviation, *s*, permitted to be employed in equation 6-41 is:

$$s_{min} = 0.145\, r_u \qquad 6\text{-}54$$

This assures a sample standard deviation which is no better than the ideal tempered glass in ideal frames.

The acceptance coefficient, α, is tabulated in Table 6-11 (+) in terms of the number of samples tested.

The following equation is presented to aid in determining if additional test samples are justified. If:

$$\bar{r} \leq r_u + s\beta \qquad (6\text{-}55)$$

then with 90% confidence, the design will not prove to be adequate with additional testing. The rejection coefficient, *ß*, is from Table 6-11 (+).

6-31.3 Certification for Rebound.

Acceptance testing shall be performed for rebound unless analysis demonstrates that the frame meets rebound criteria. All frames with mullions must be tested. Testing is performed with the load applied to the inboard surface of the window assembly. The equivalent static rebound load, r^-, is substituted for the design load, r_u.

6-32 INSTALLATION INSPECTION.

A survey of glazing failures due to wind load indicates that improper installation of setting blocks, gaskets, or lateral shims, or poor edge bite is a significant cause of the failures experienced.

Figure 6-30 Characteristic Parameters for Glass Pane, Blast Loading, Resistance Function and Response Model

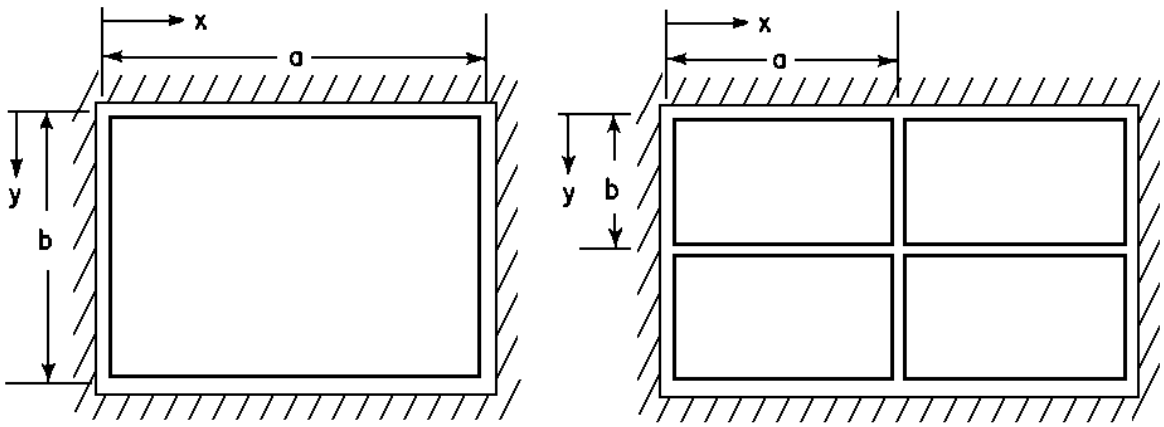

(a) WINDOW PANE GEOMETRY

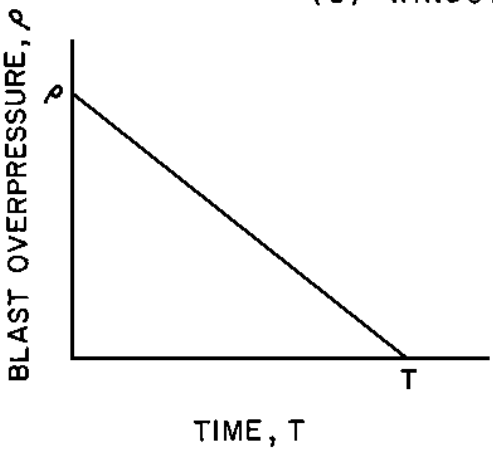

(b) BLAST LOADING

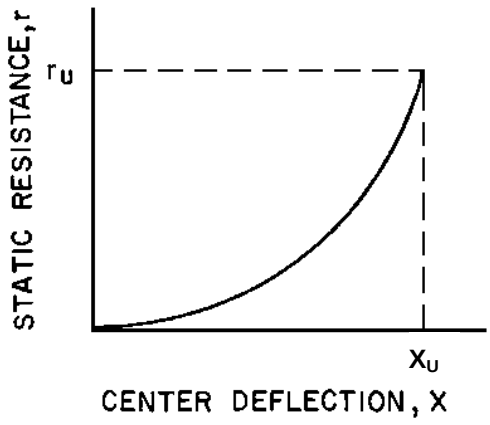

(c) RESISTANCE OF GLASS PANE

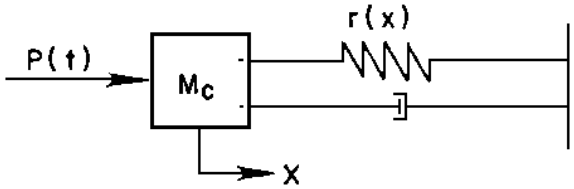

(d) DYNAMIC RESPONSE MODEL

Figure 6-31 Peak Blast Pressure Capacity for Tempered Glass Panes (*a*/*b* = 1.00, *t* = 1/4 and 5/16 in)

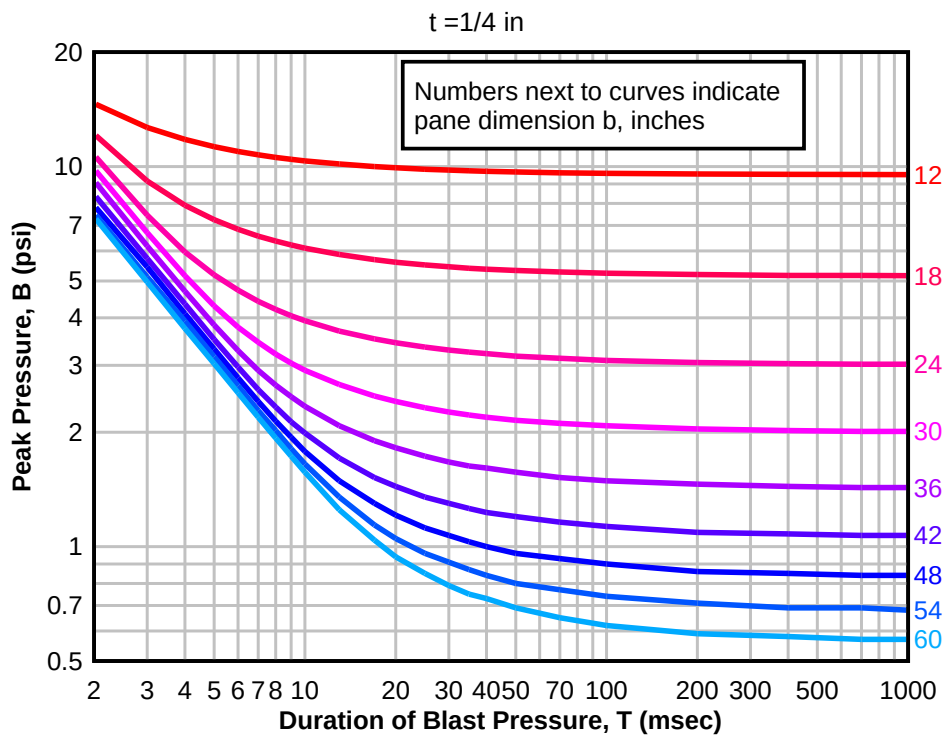

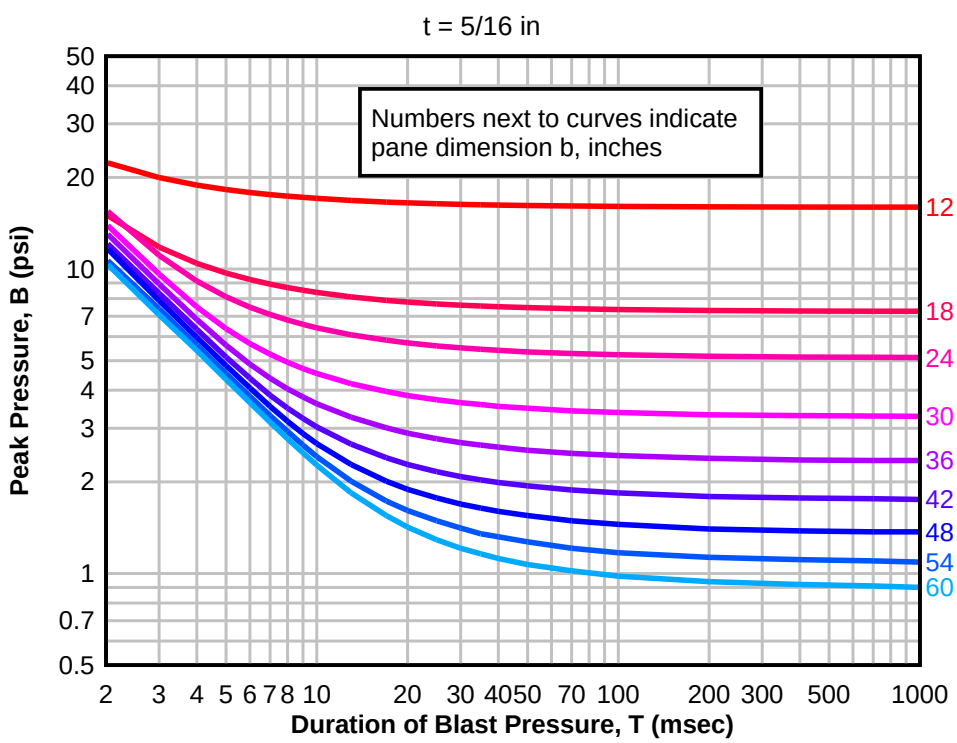

Figure 6-32 Peak Blast Pressure Capacity for Tempered Glass Panes (*a*/*b* = 1.00, *t* = 3/8 and 1/2 in)

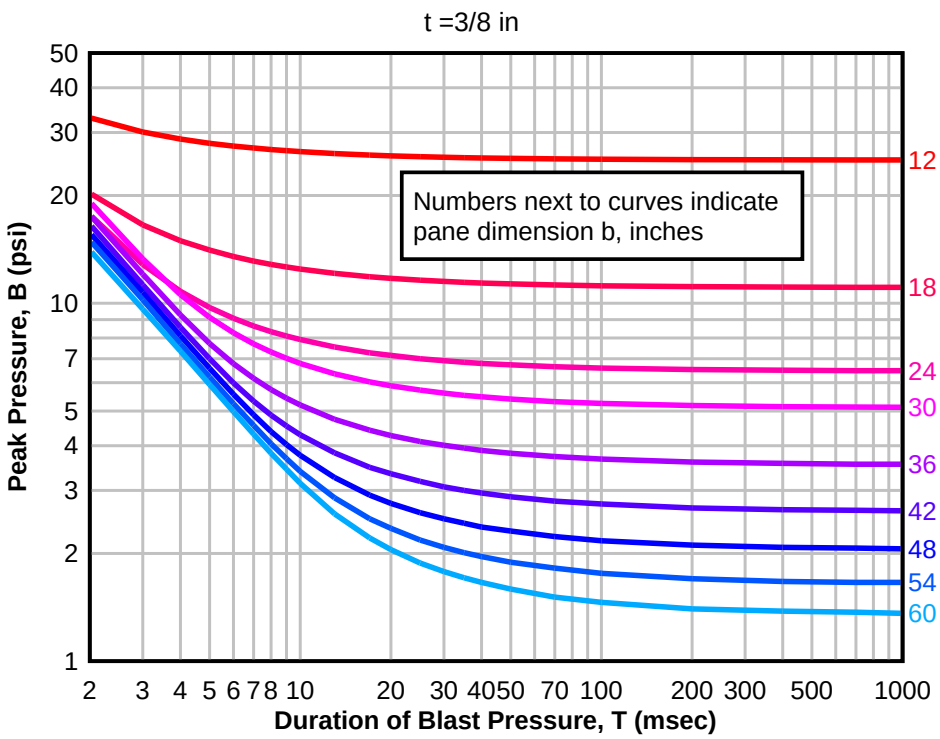

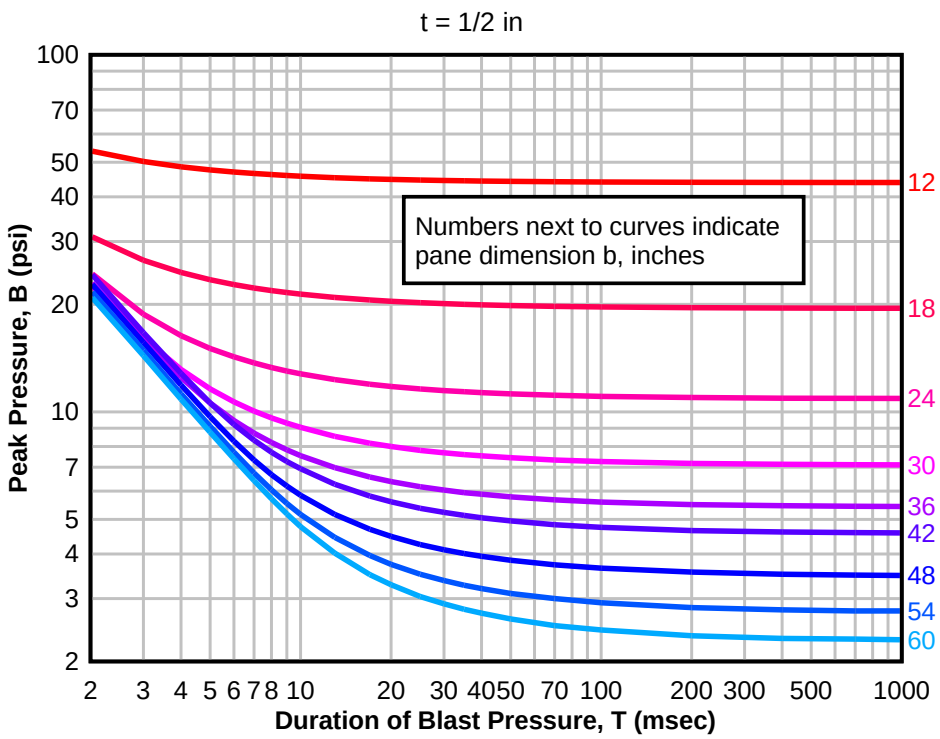

Figure 6-33 Peak Blast Pressure Capacity for Tempered Glass Panes (*a*/*b* = 1.00, *t* = 5/8 and 3/4 in)

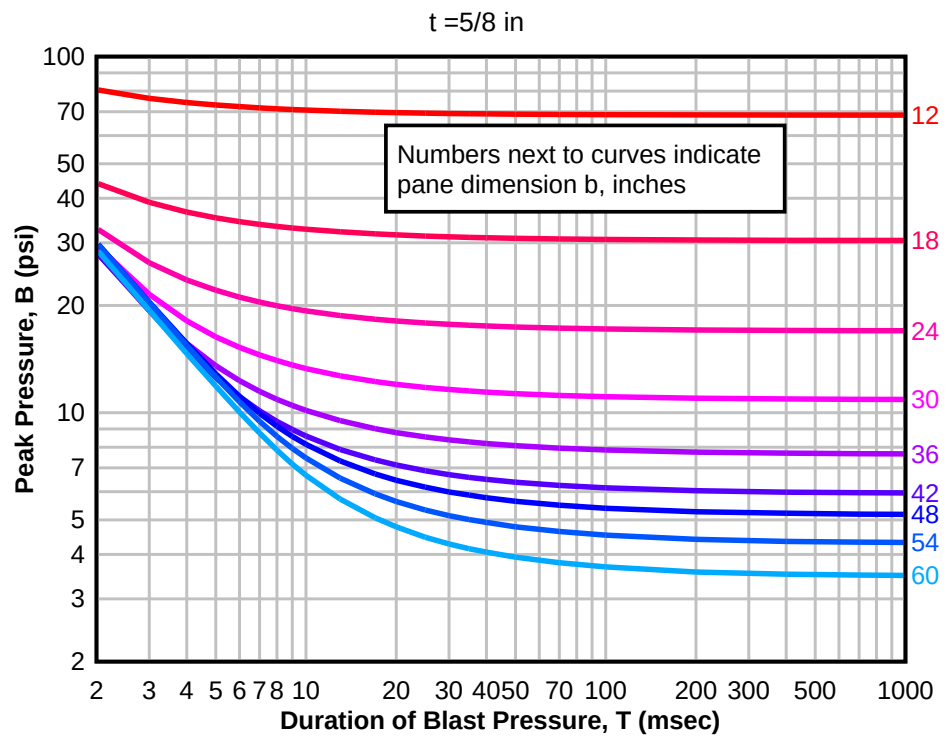

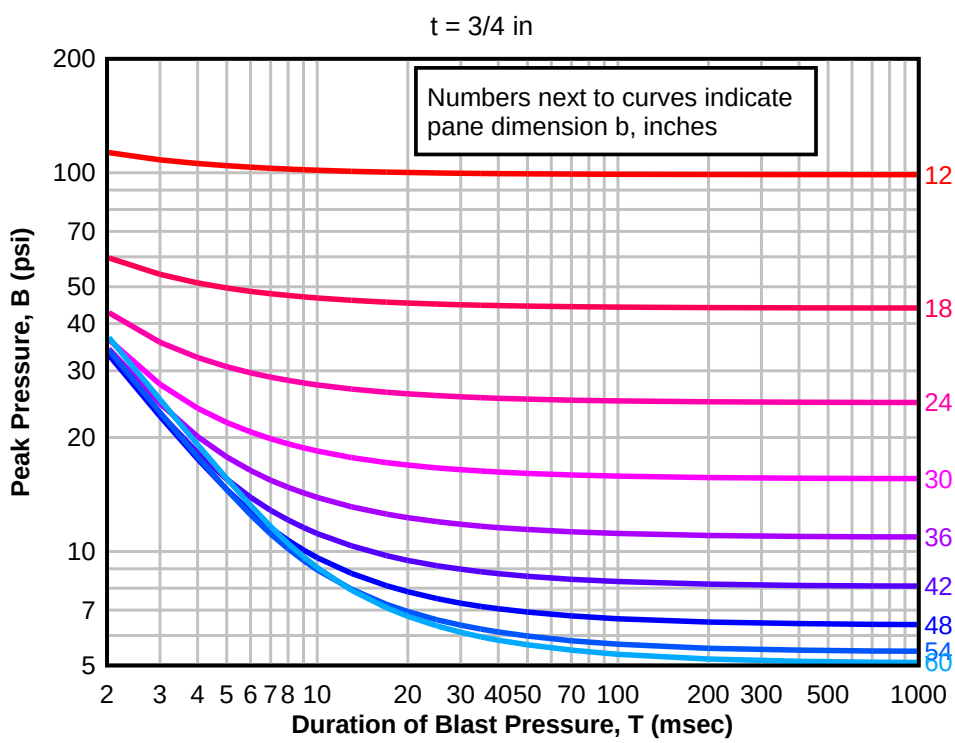

Figure 6-34 Peak Blast Pressure Capacity for Tempered Glass Panes (*a*/*b* = 1.25, *t* = 1/4 and 5/16 in)

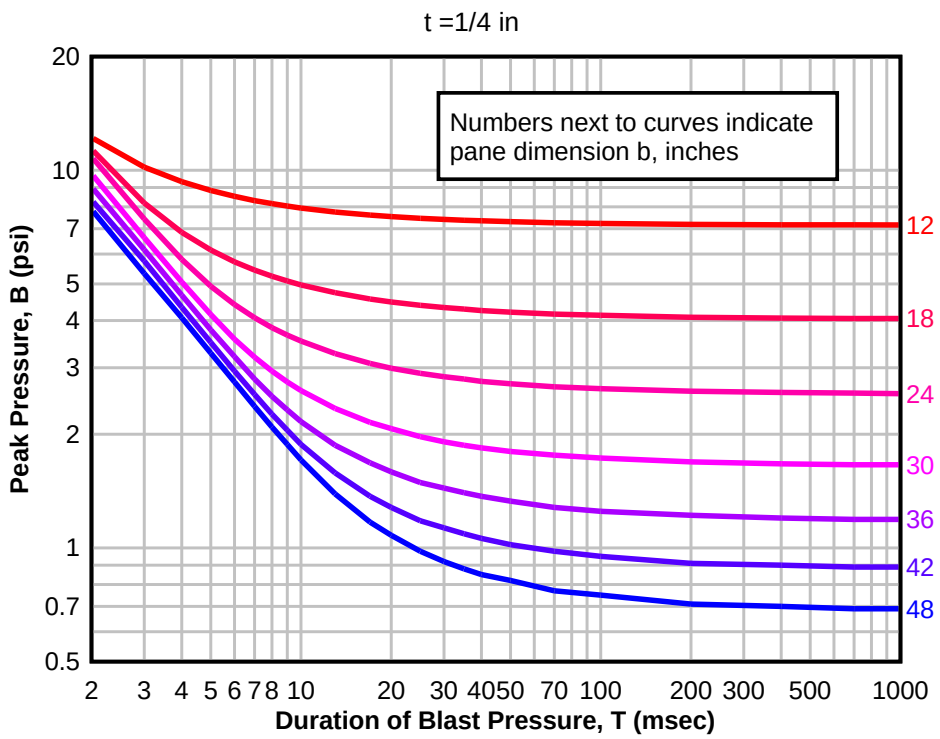

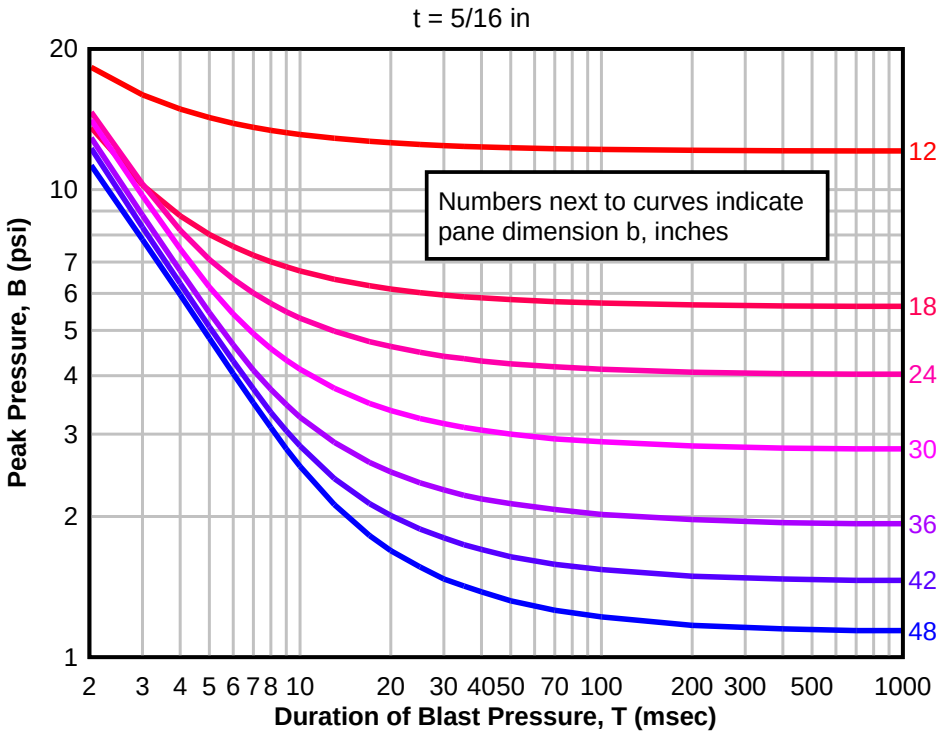

Figure 6-35 Peak Blast Pressure Capacity for Tempered Glass Panes (*a*/*b* = 1.25, *t* = 3/8 and 1/2 in)

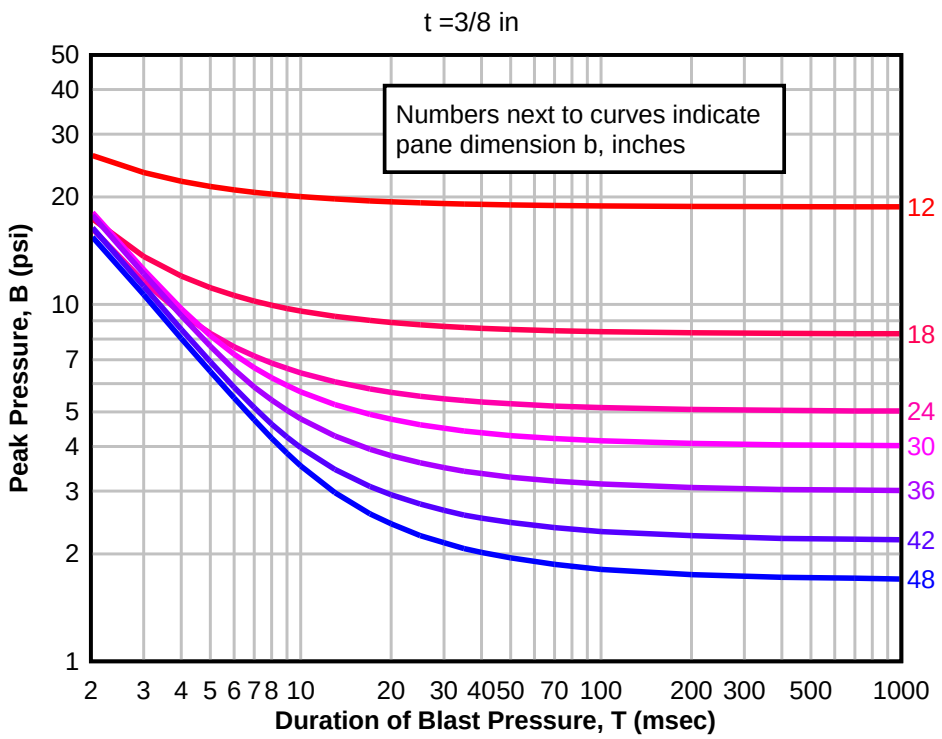

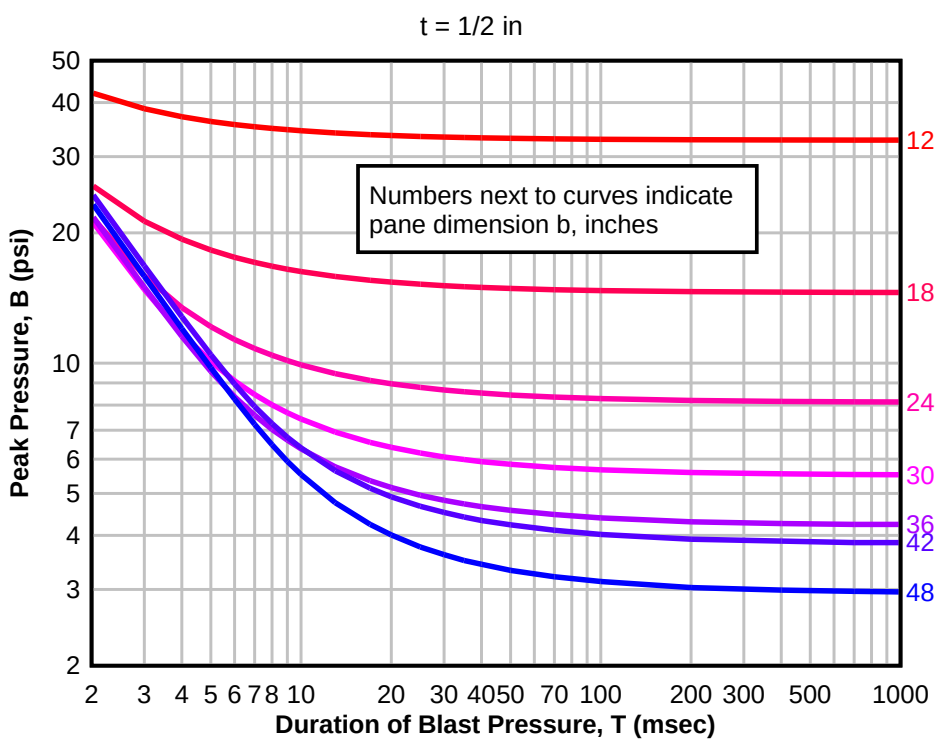

Figure 6-36 Peak Blast Pressure Capacity for Tempered Glass Panes (*a*/*b* = 1.25, *t* = 5/8 and 3/4 in)

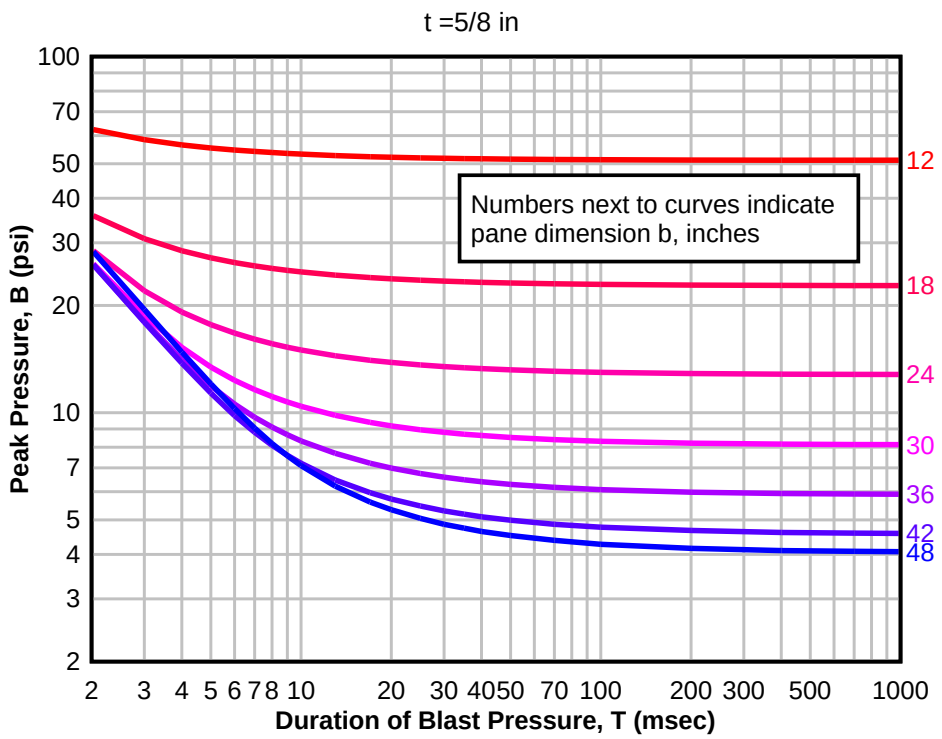

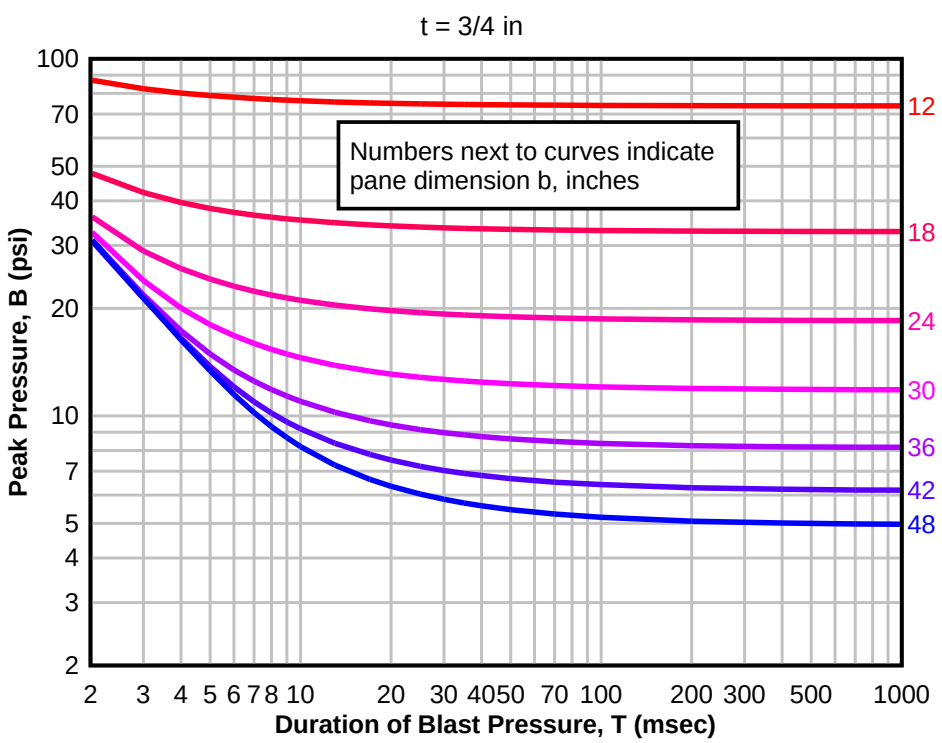

Figure 6-37 Peak Blast Pressure Capacity for Tempered Glass Panes (*a*/*b* = 1.50, *t* = 1/4 and 5/16 in)

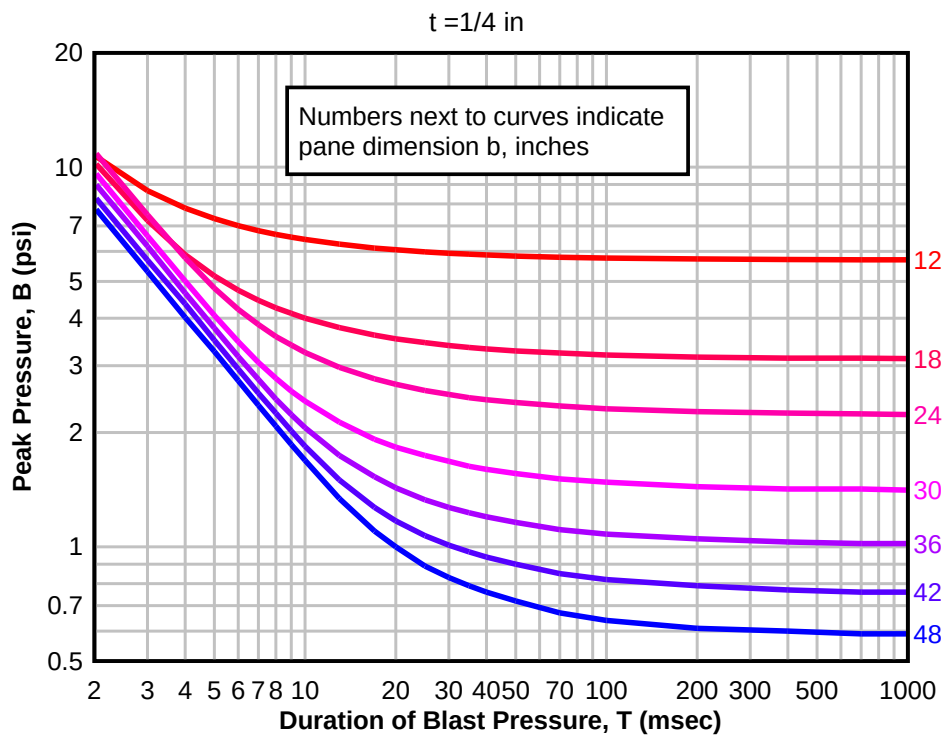

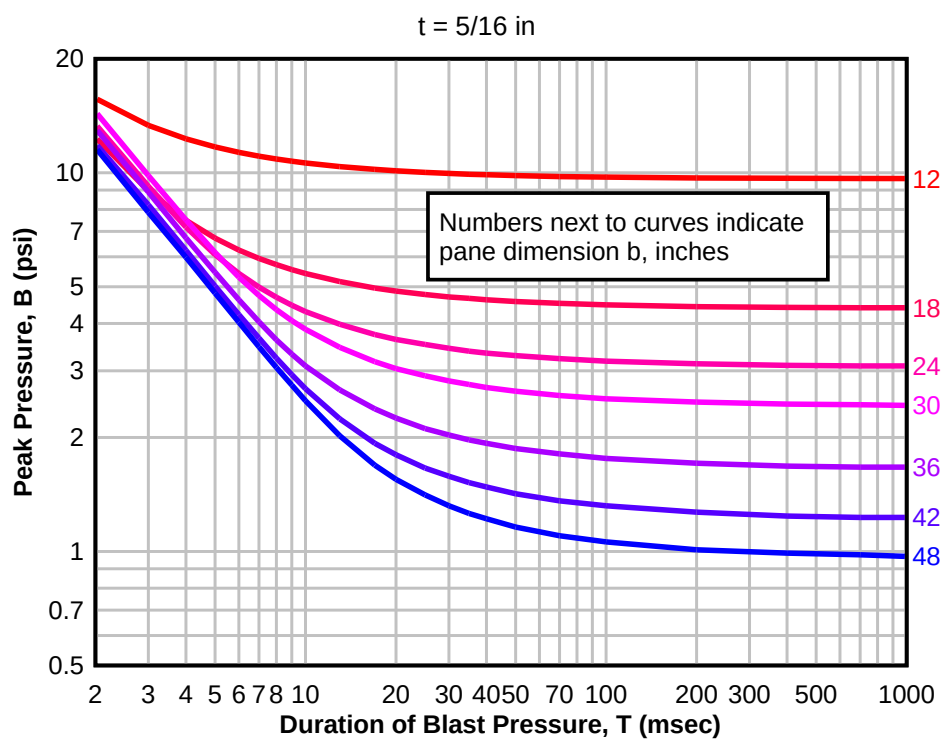

Figure 6-38 Peak Blast Pressure Capacity for Tempered Glass Panes (*a*/*b* = 1.50, *t* = 3/8 and 1/2 in)

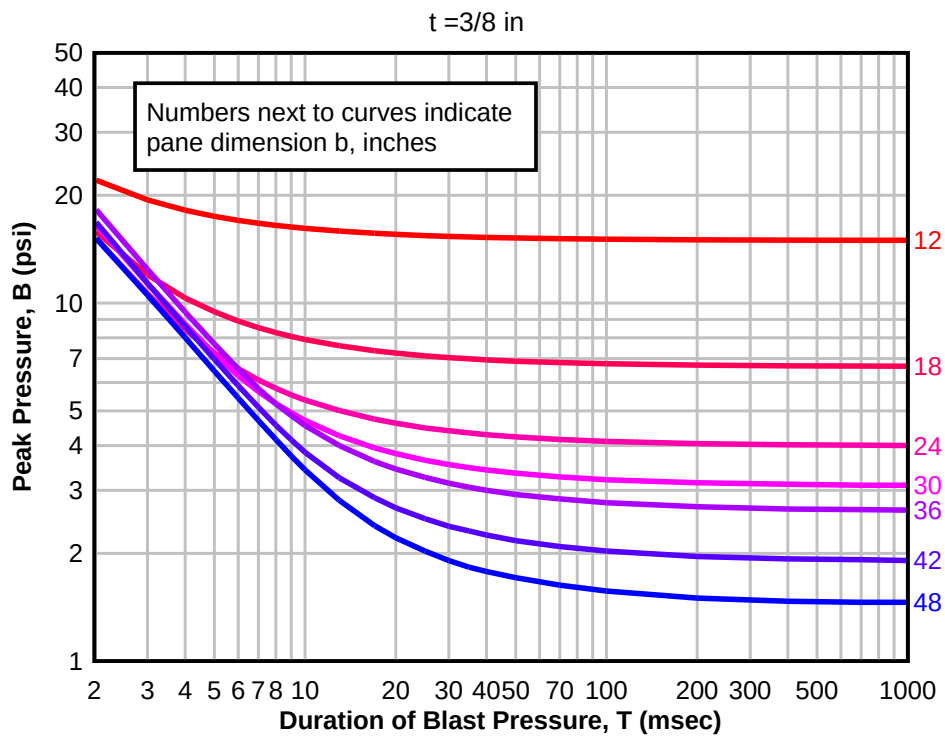

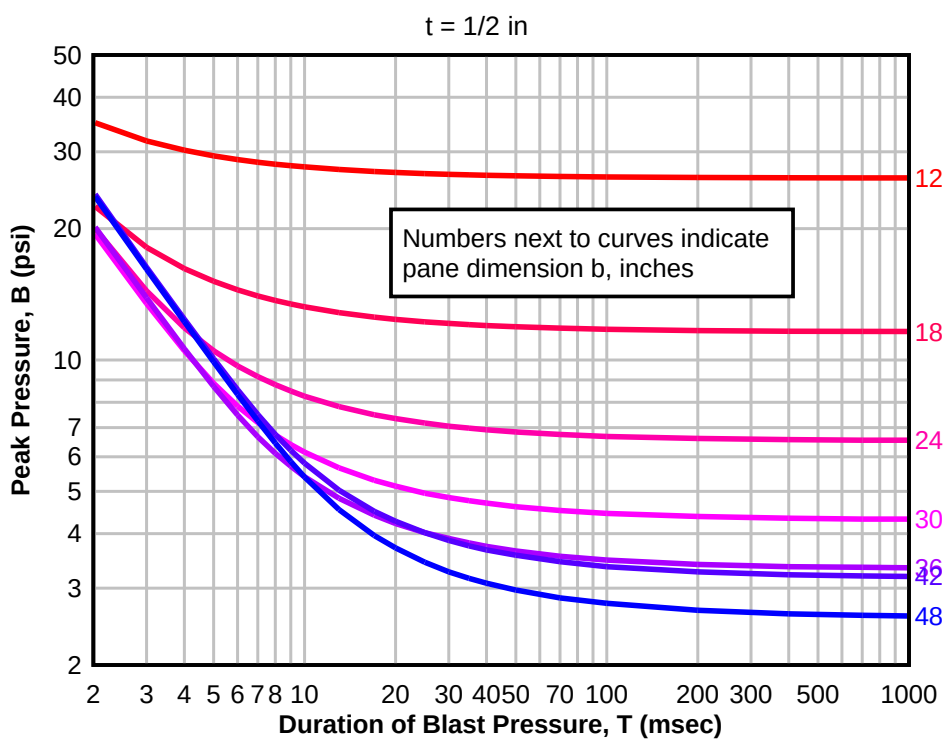

Figure 6-39 Peak Blast Pressure Capacity for Tempered Glass Panes (*a*/*b* = 1.50, *t* = 5/8 and 3/4 in)

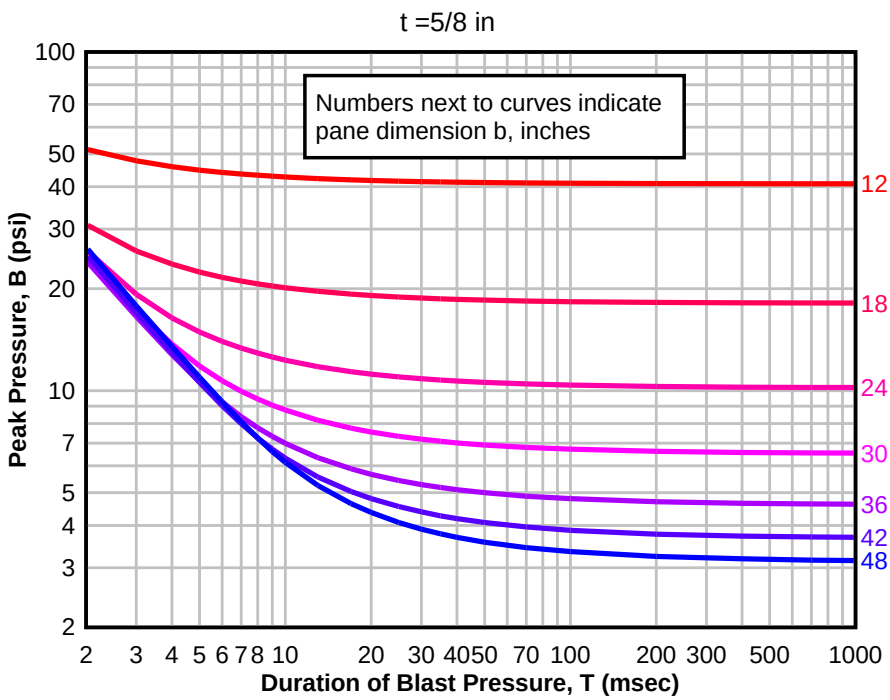

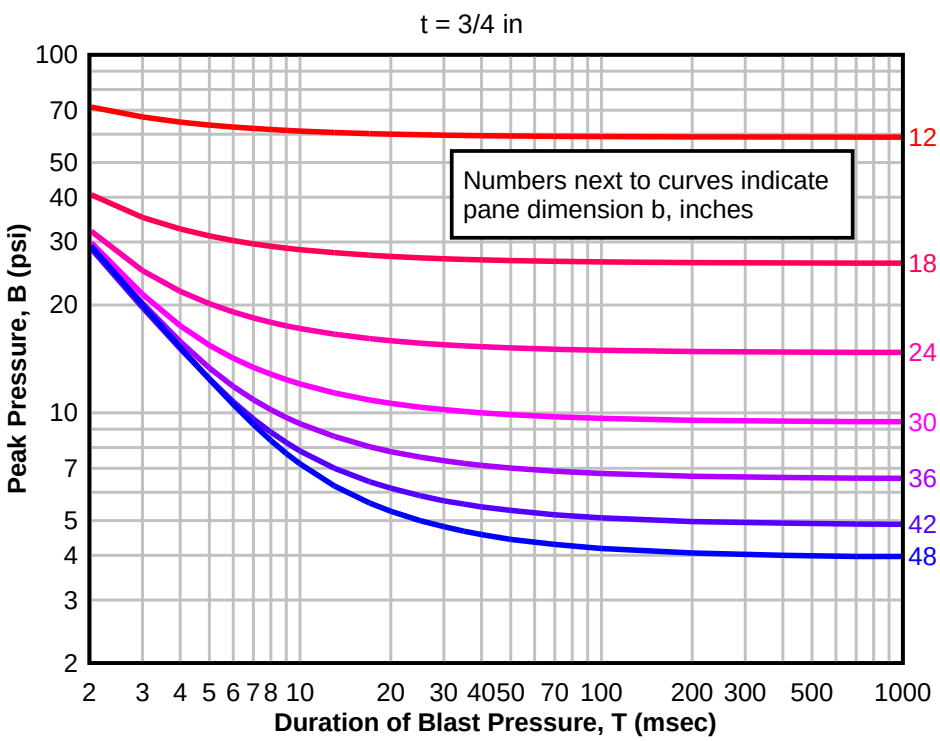

Figure 6-40 Peak Blast Pressure Capacity for Tempered Glass Panes (*a*/*b* = 1.75, *t* = 1/4 and 5/16 in)

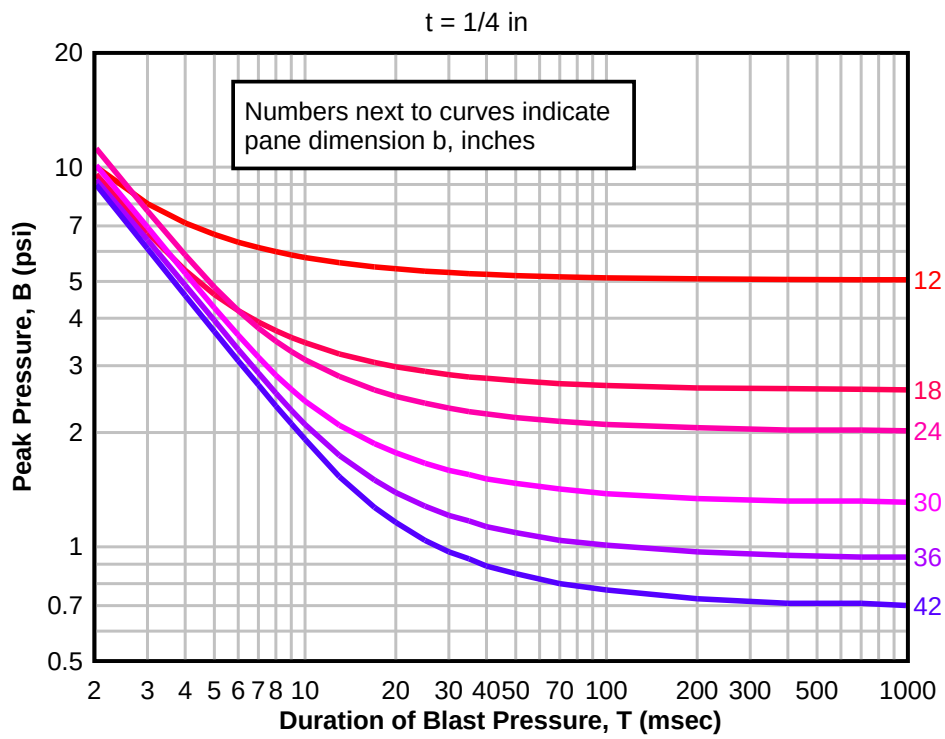

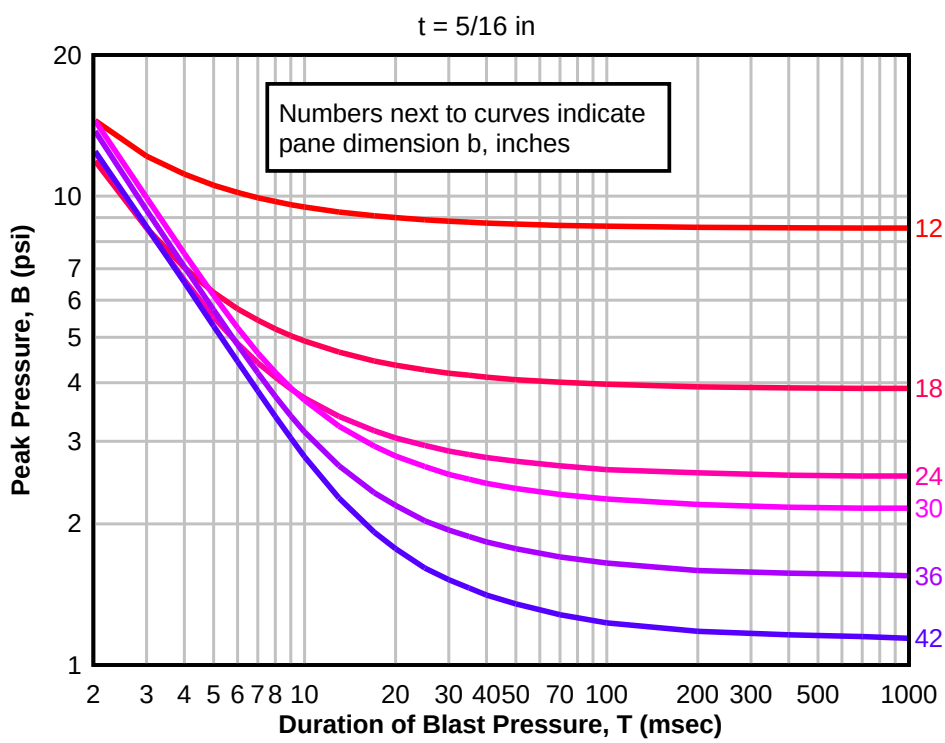

Figure 6-41 Peak Blast Pressure Capacity for Tempered Glass Panes (*a*/*b* = 1.75, *t* = 3/8 and 1/2 in)

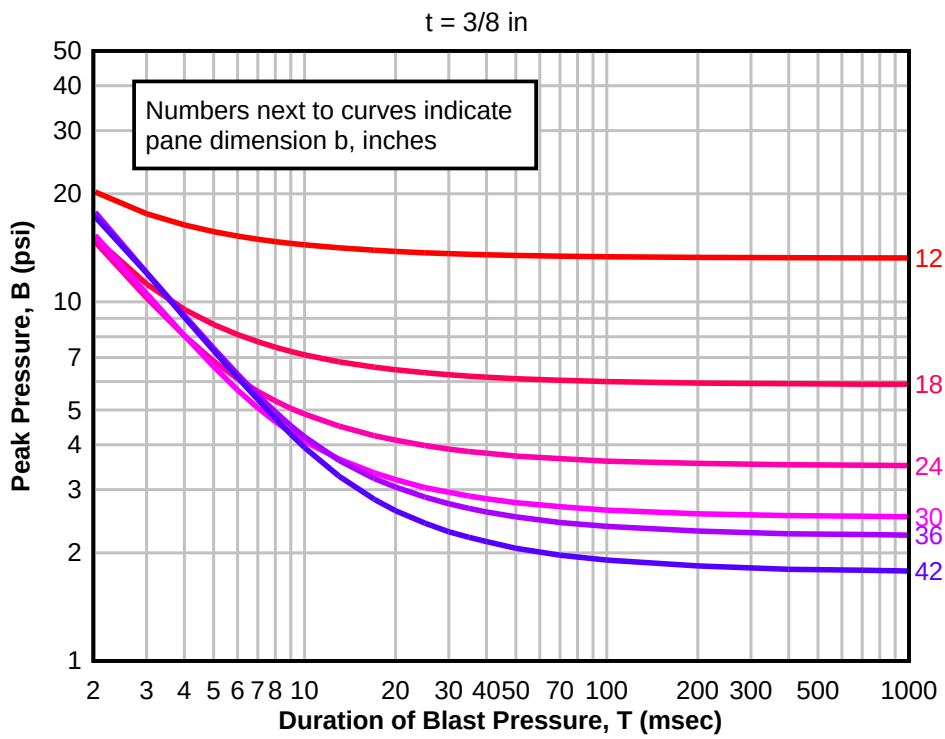

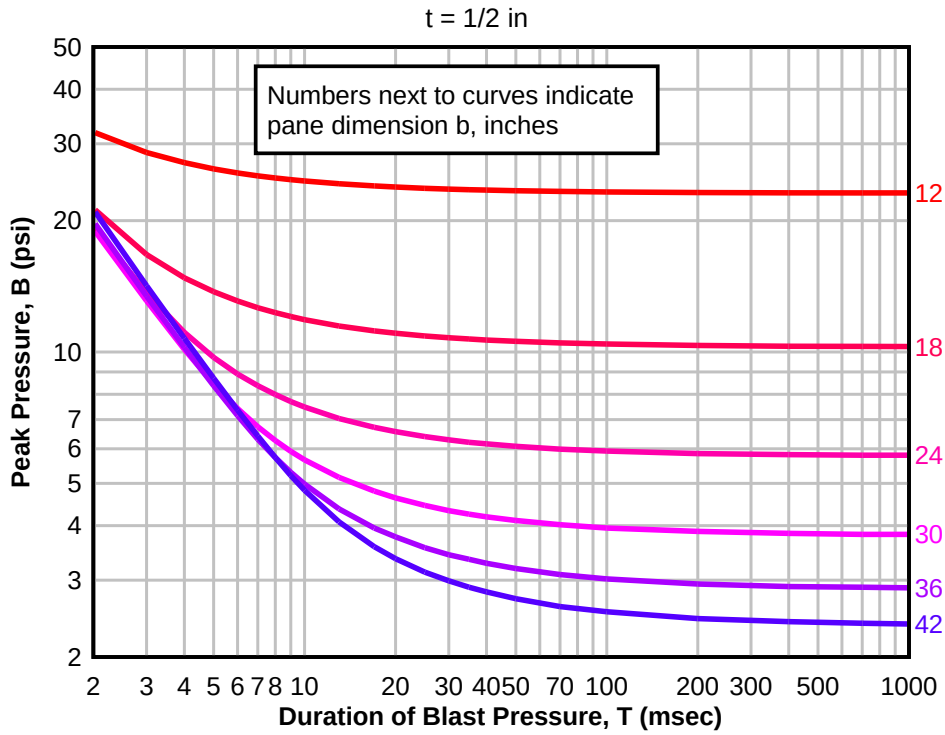

Figure 6-42 Peak Blast Pressure Capacity for Tempered Glass Panes (*a*/*b* = 1.75, *t* = 5/8 and 3/4 in)

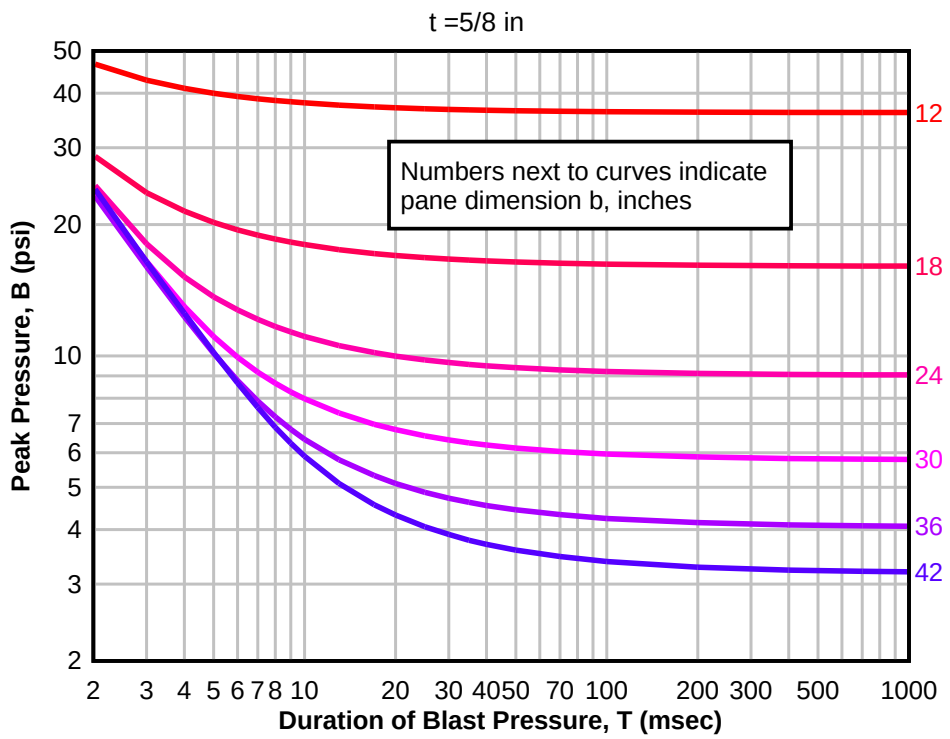

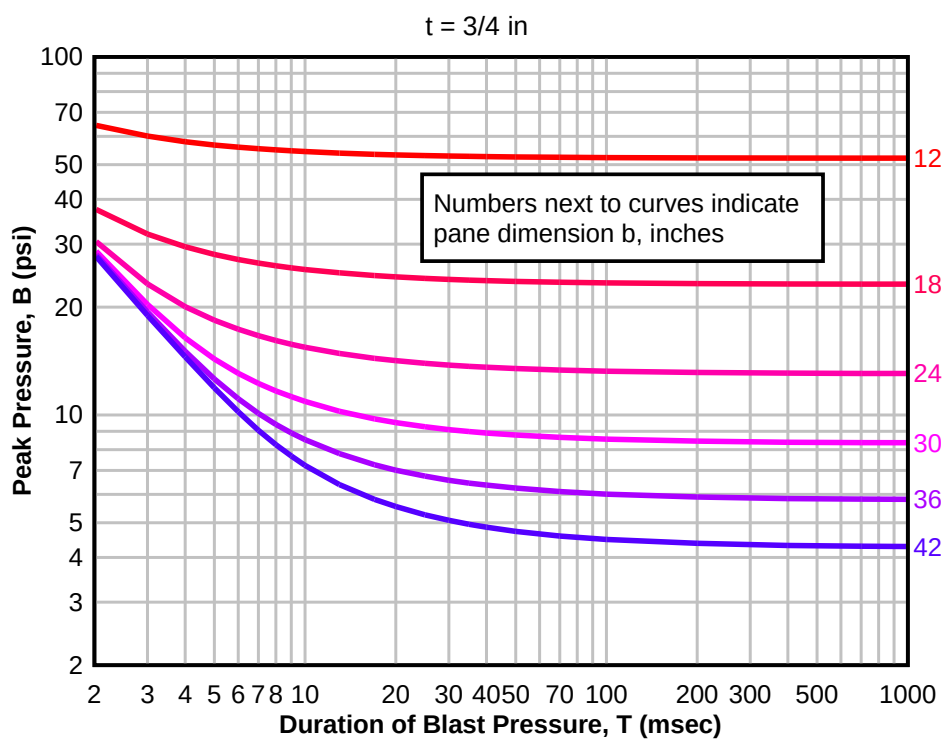

Figure 6-43 Peak Blast Pressure Capacity for Tempered Glass Panes (*a*/*b* = 2.00, *t* = 1/4 and 5/16 in)

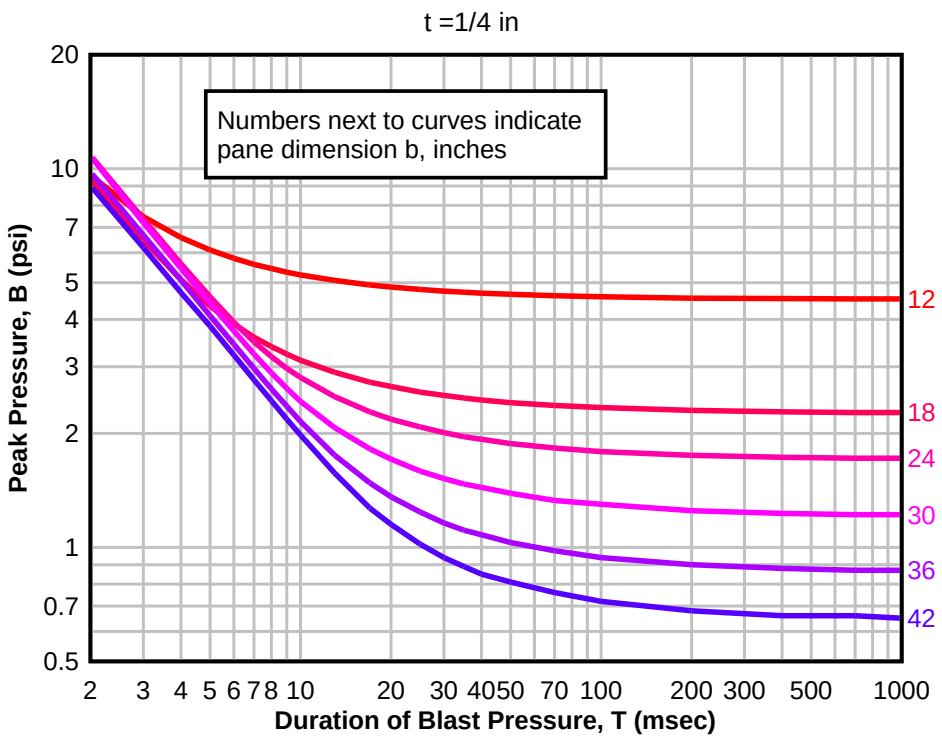

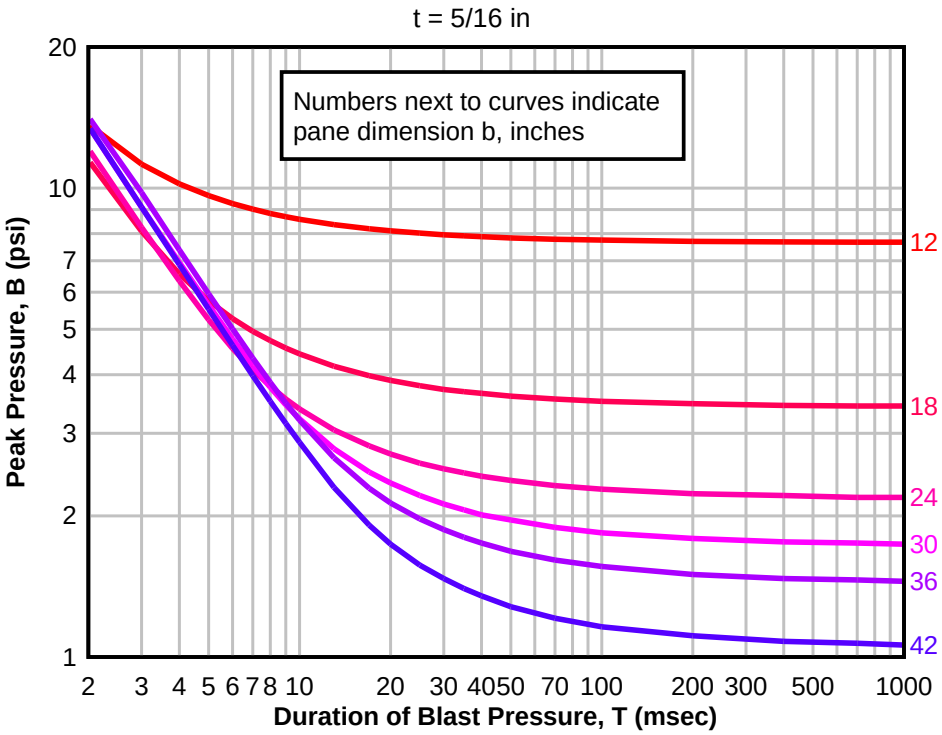

Figure 6-44 Peak Blast Pressure Capacity for Tempered Glass Panes (*a*/*b* = 2.00, *t* = 3/8 and 1/2 in)

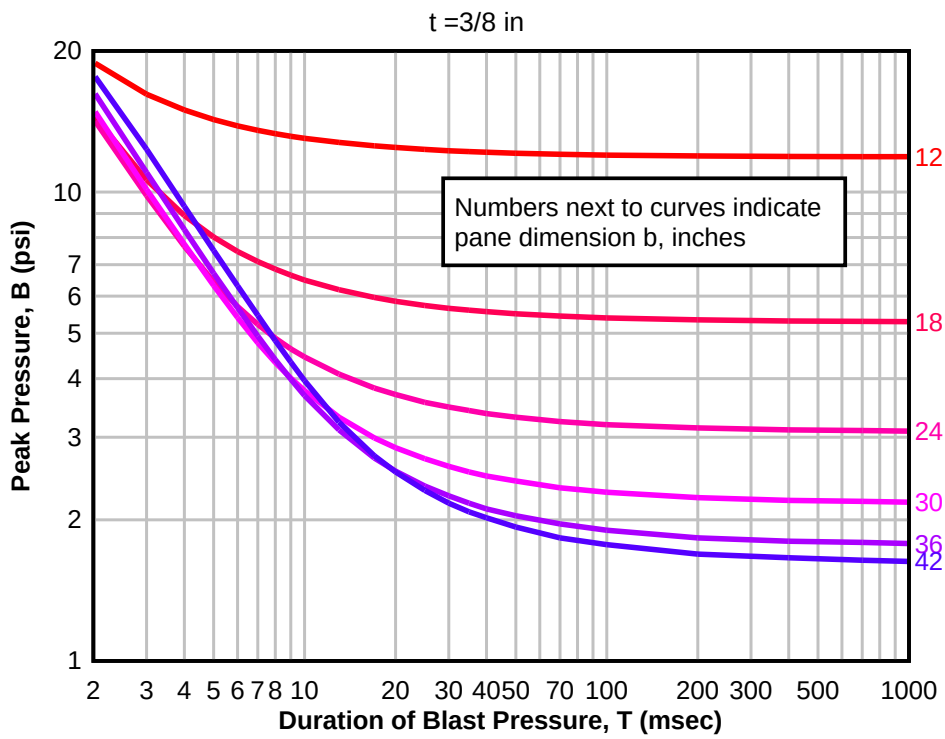

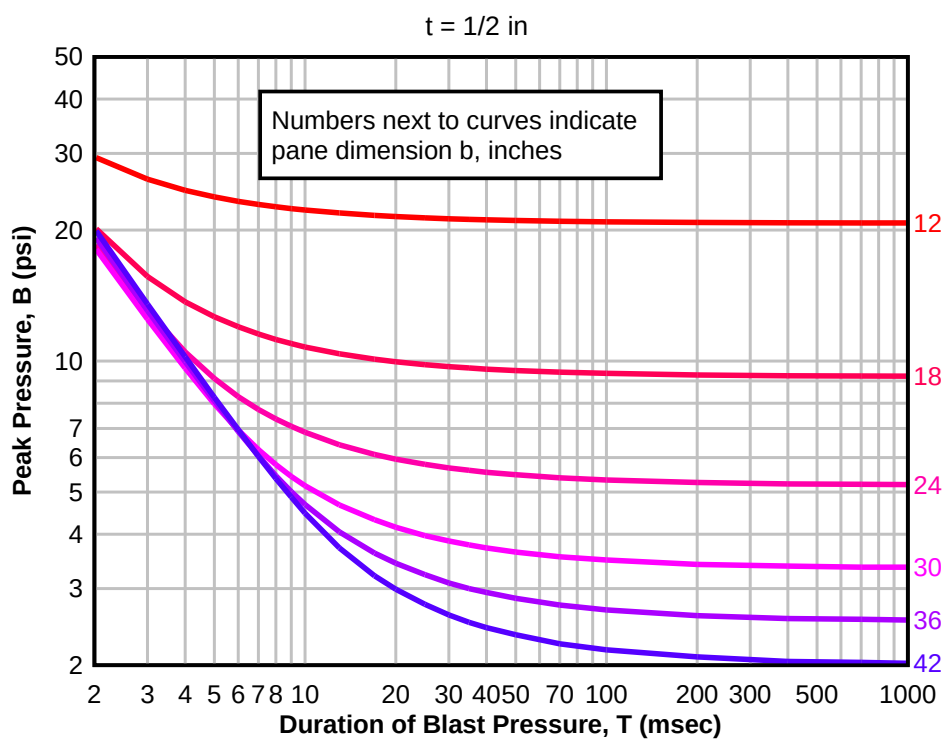

Figure 6-45 Peak Blast Pressure Capacity for Tempered Glass Panes (*a*/*b* = 2.00, *t* = 5/8 and 3/4 in)

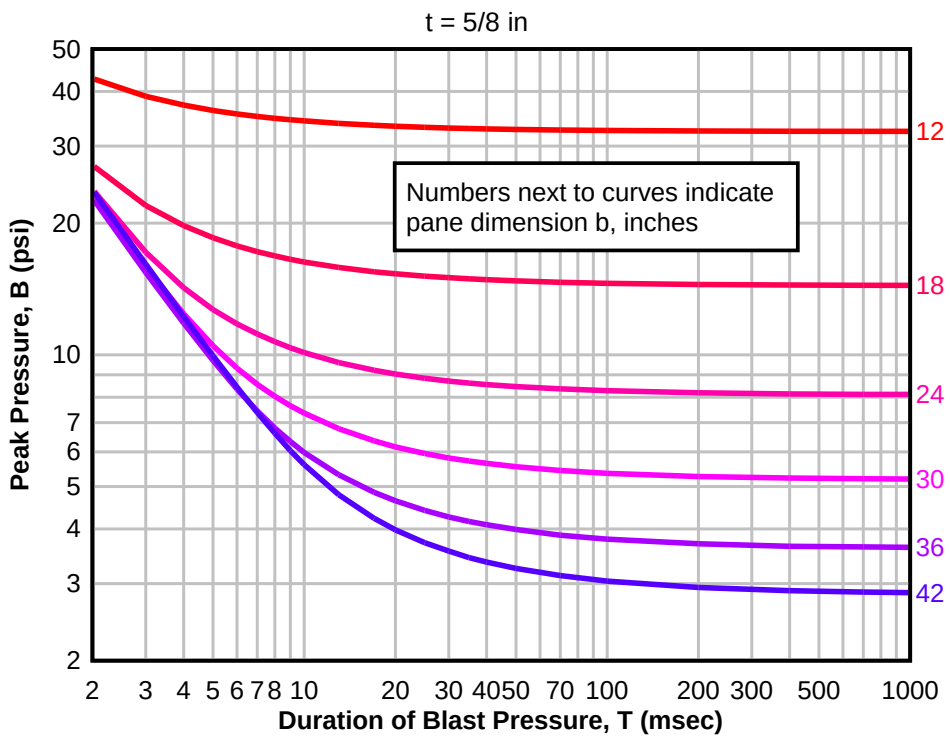

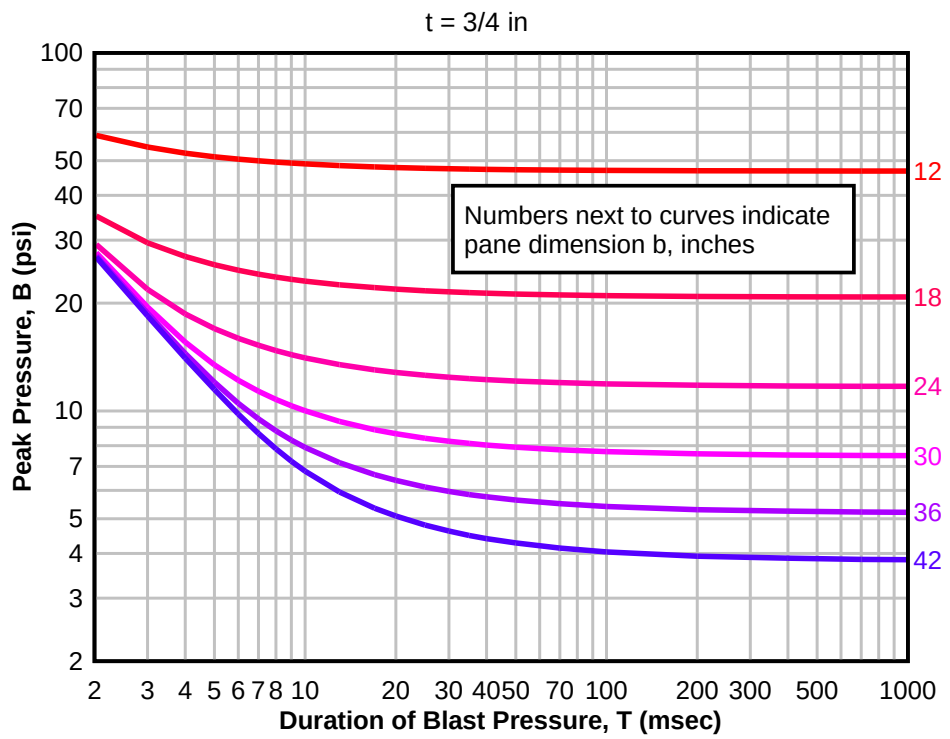

Figure 6-46 Peak Blast Pressure Capacity for Tempered Glass Panes (*a*/*b* = 3.00, *t* = 1/4 and 5/16 in)

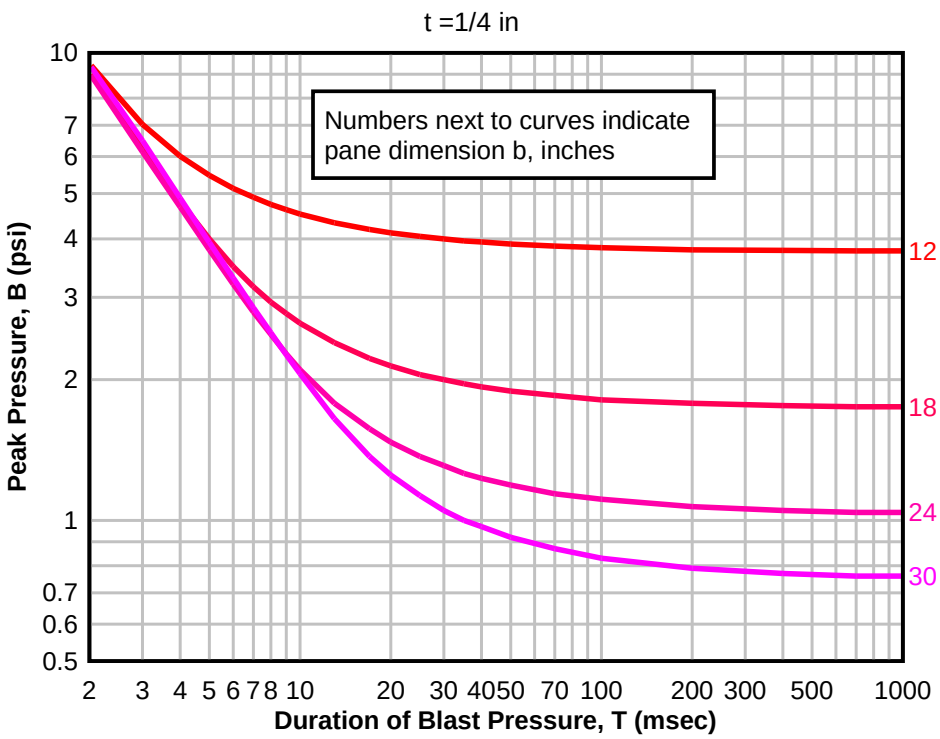

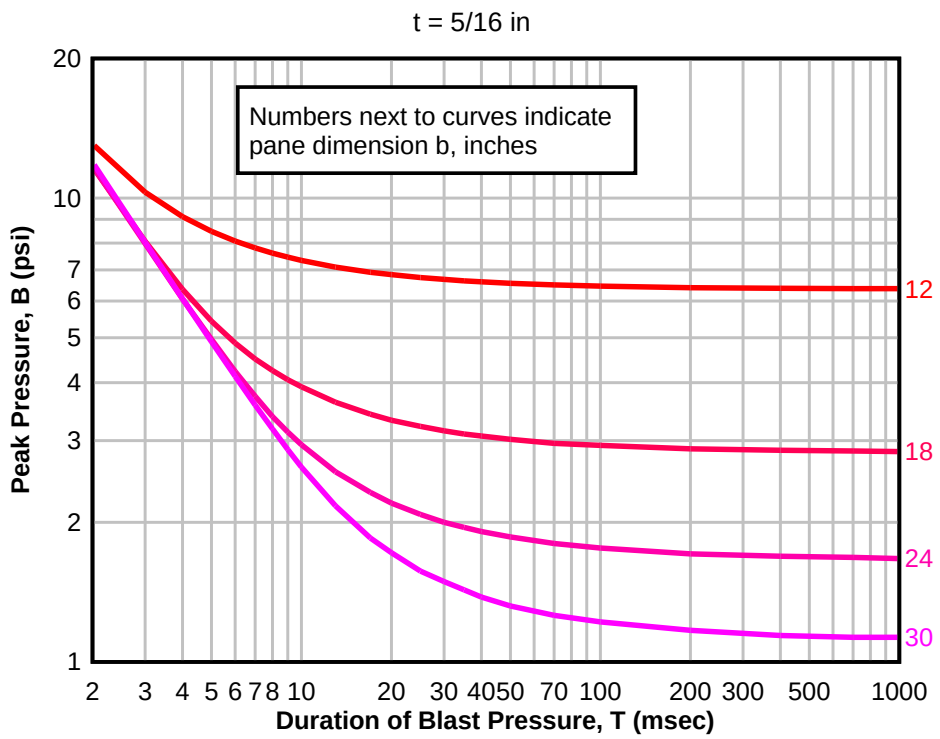

Figure 6-47 Peak Blast Pressure Capacity for Tempered Glass Panes (*a*/*b* = 3.00, *t* = 3/8 and 1/2 in)

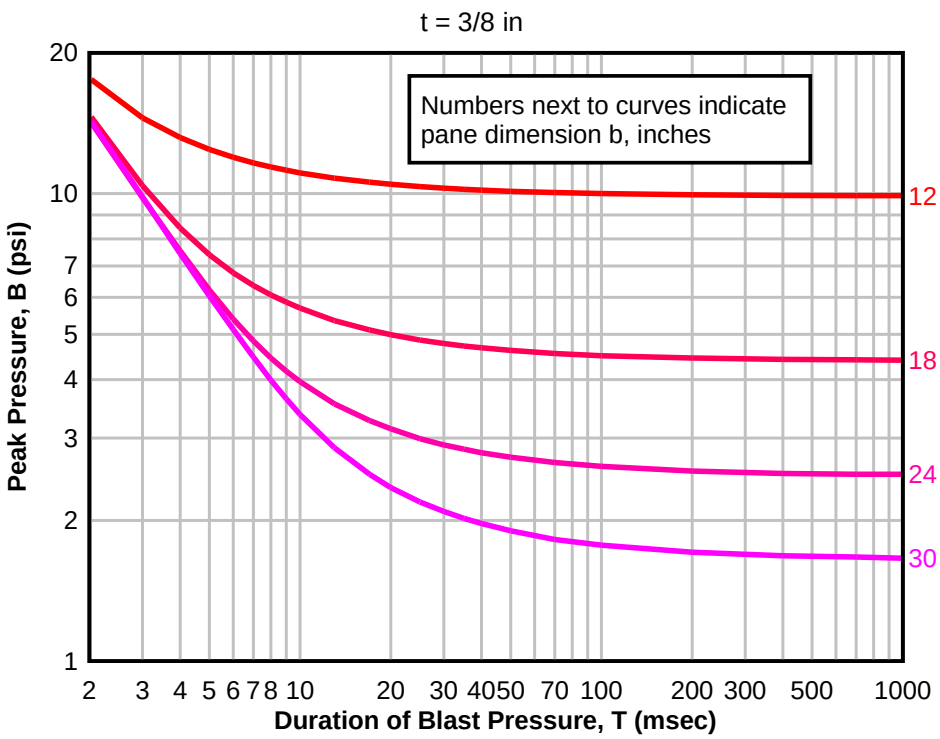

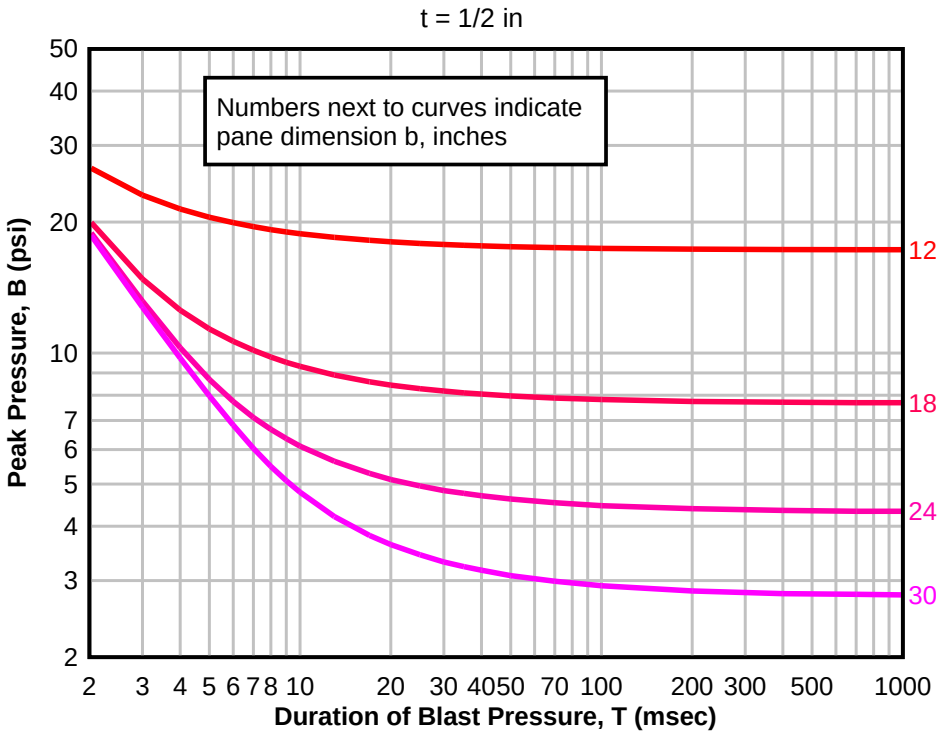

Figure 6-48 Peak Blast Pressure Capacity for Tempered Glass Panes (*a*/*b* = 3.00, *t* = 5/8 and 3/4 in)

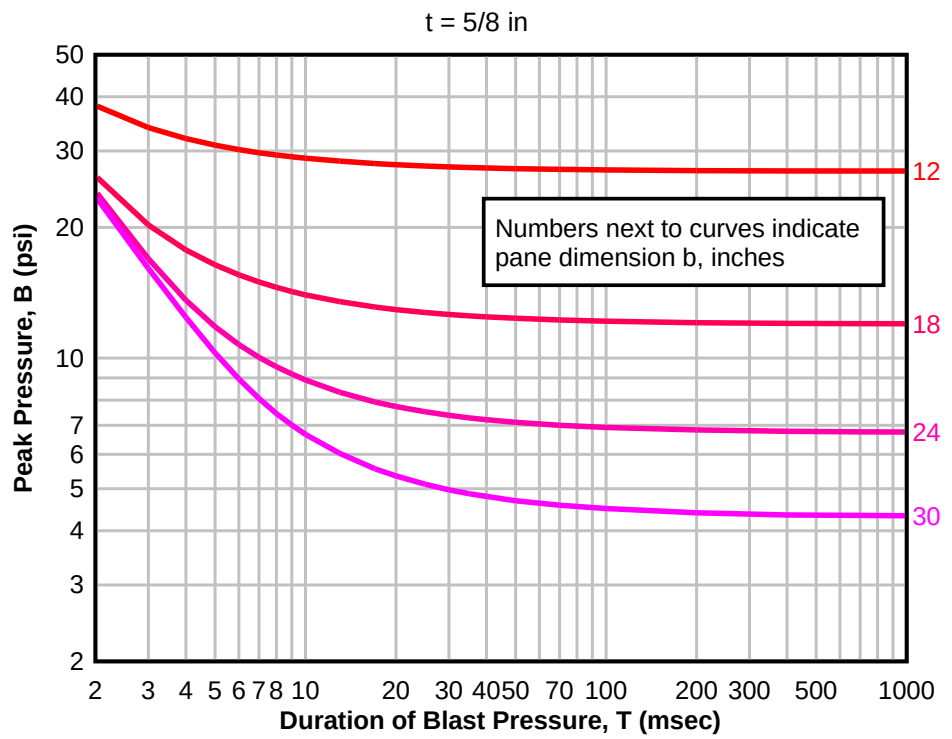

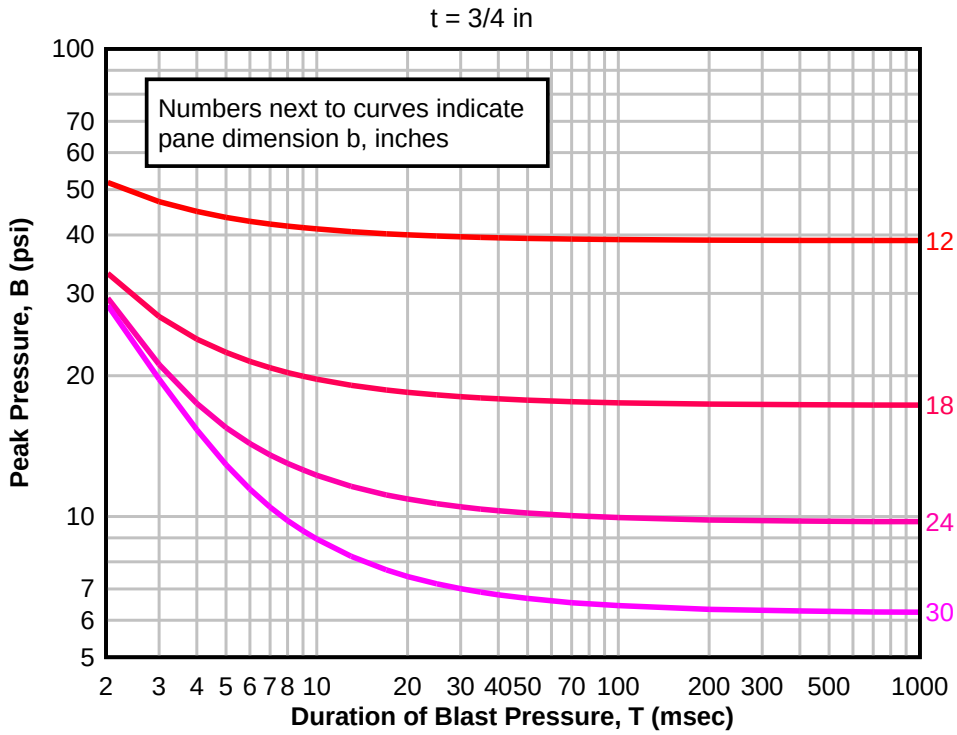

Figure 6-49 Peak Blast Pressure Capacity for Tempered Glass Panes (*a*/*b* = 4.00, *t* = 1/4 and 5/16 in)

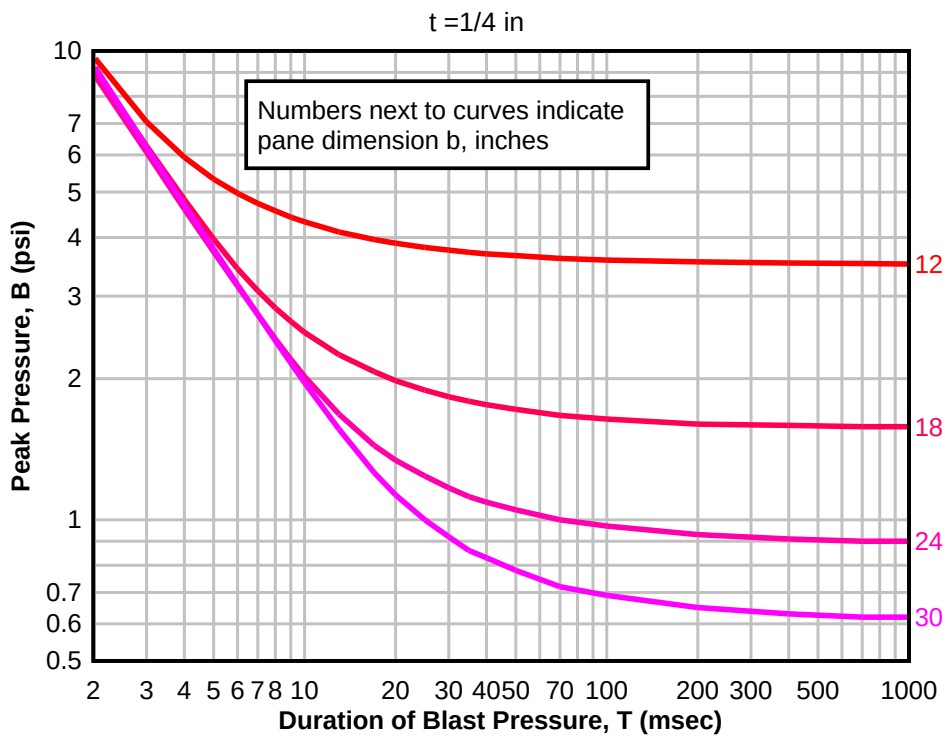

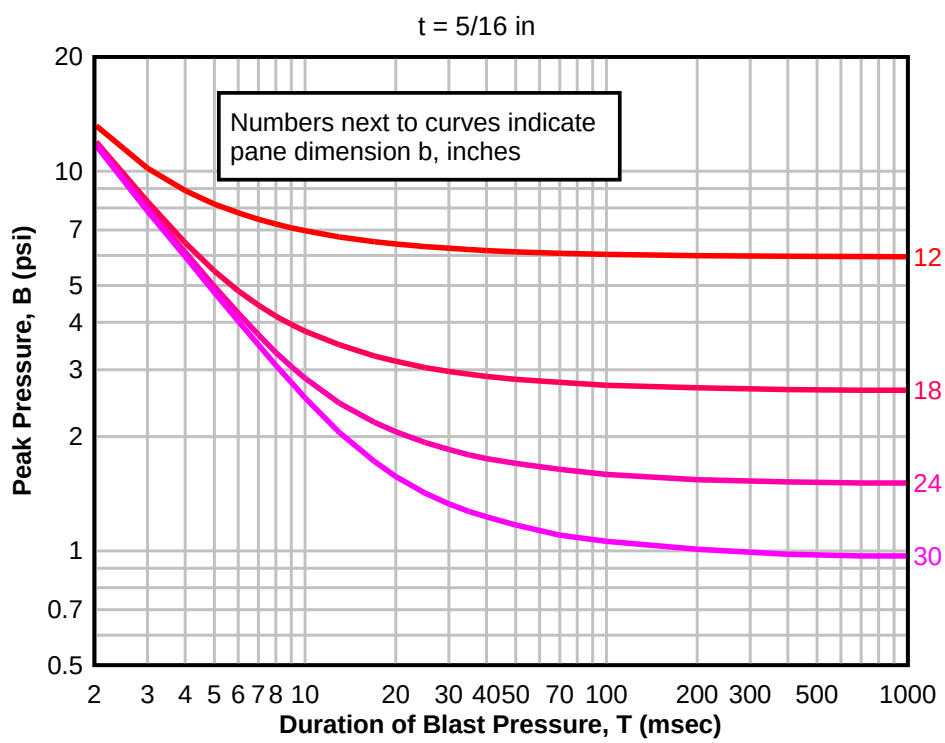

Figure 6-50 Peak Blast Pressure Capacity for Tempered Glass Panes (*a*/*b* = 4.00, *t* = 3/8 and 1/2 in)

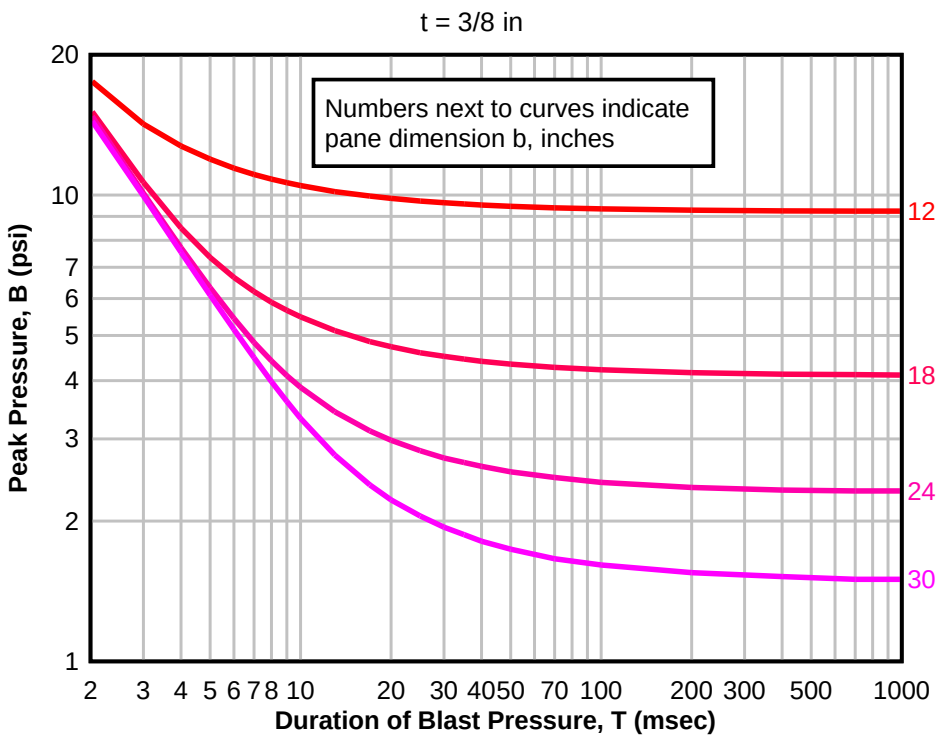

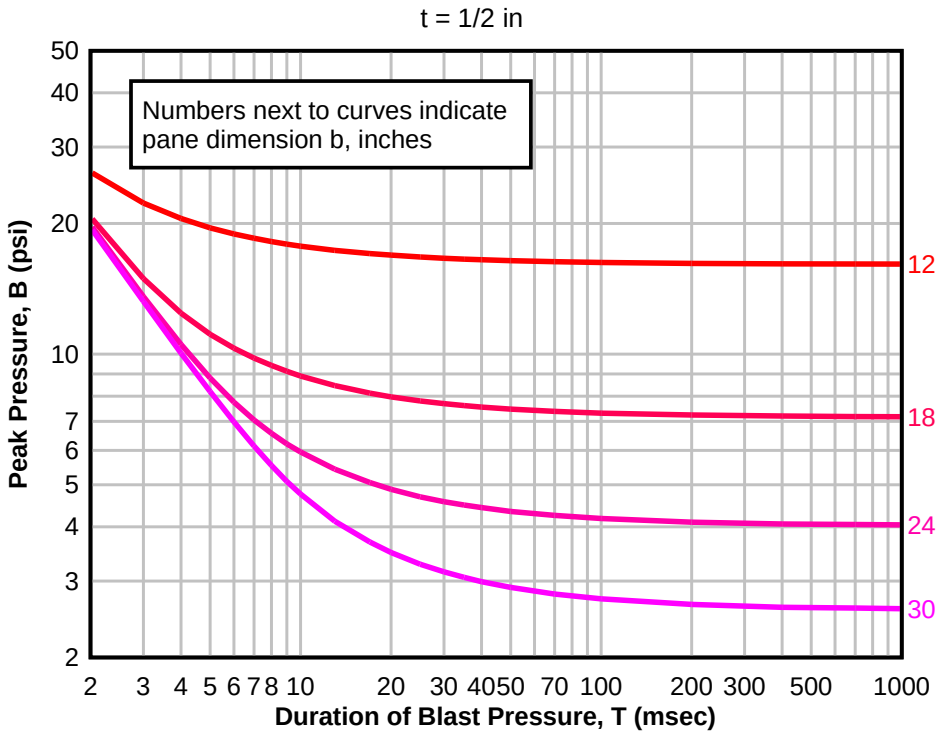

Figure 6-51 Peak Blast Pressure Capacity for Tempered Glass Panes (*a*/*b* = 4.00, *t* = 5/8 and 3/4 in)

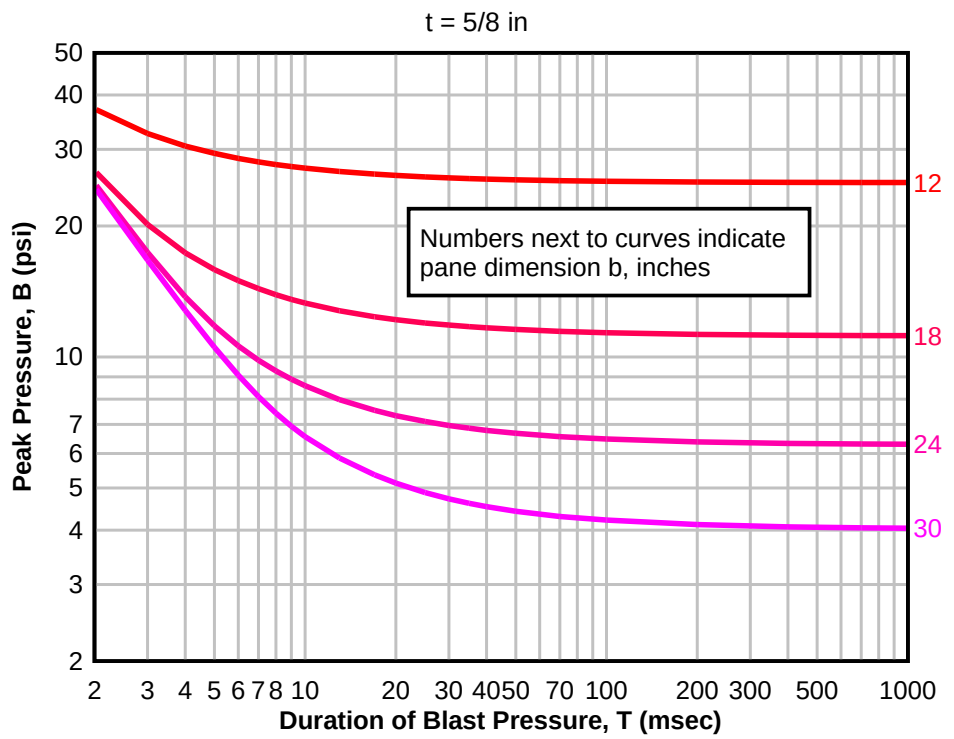

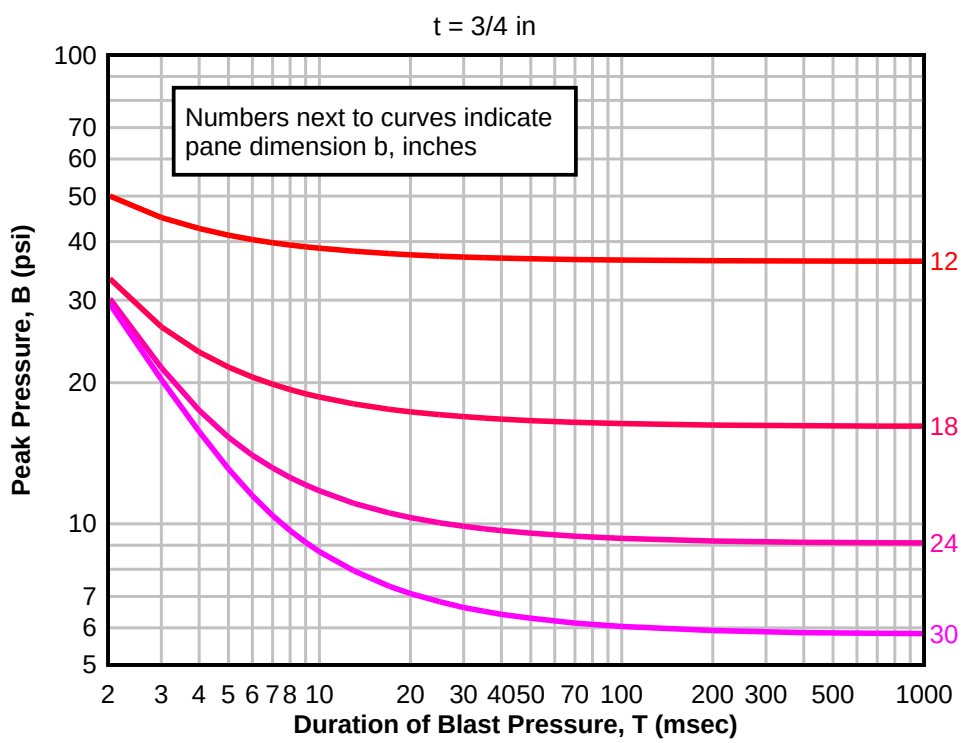

Figure 6-52 Nondimensional Static Load-Stress Relationships for Simply Supported Tempered Glass (after Moore)

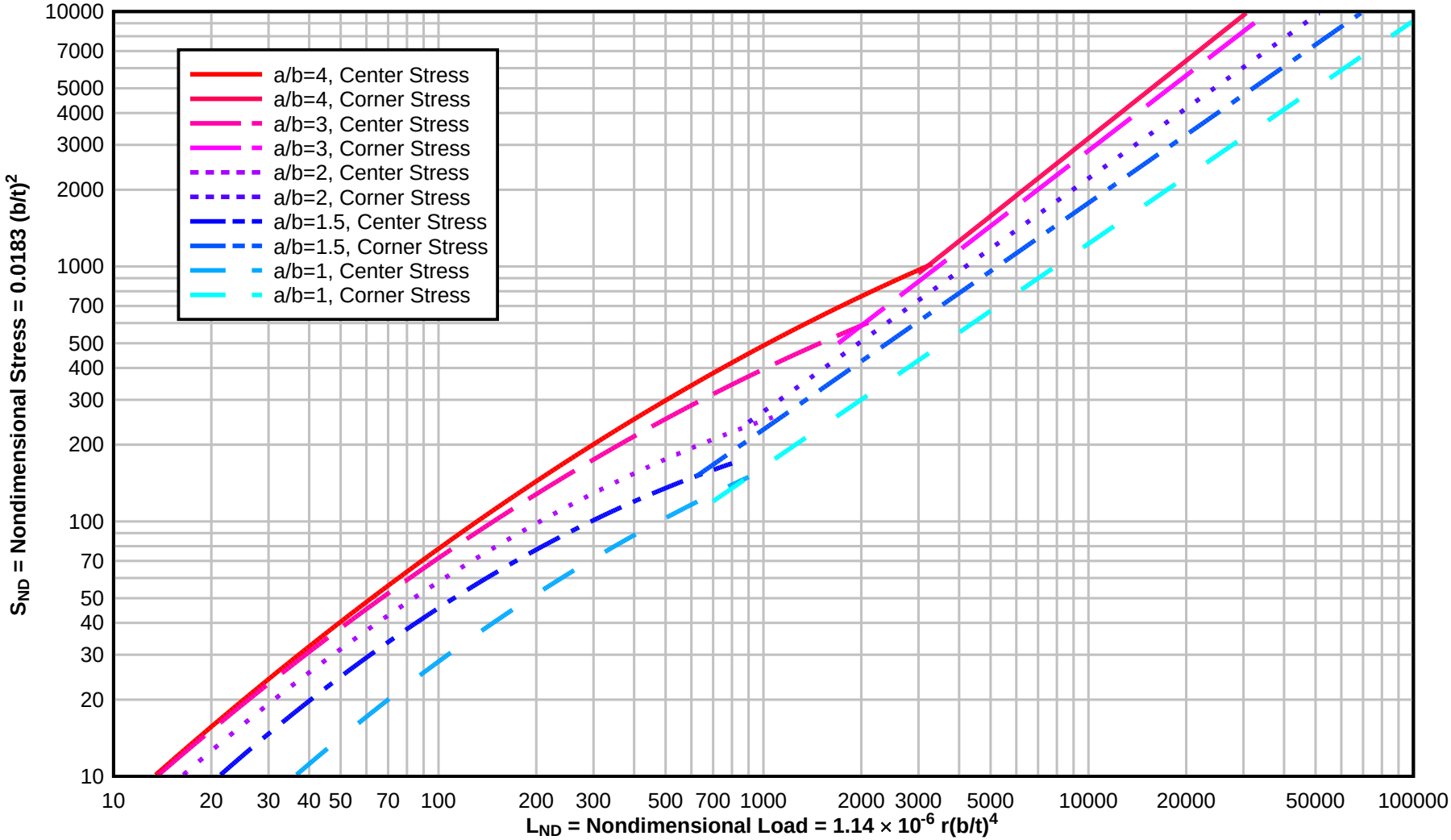

Figure 6-53 Nondimensional Static Load-Crater Deflection Relationships for Simply Supported Tempered Glass (after Moore)

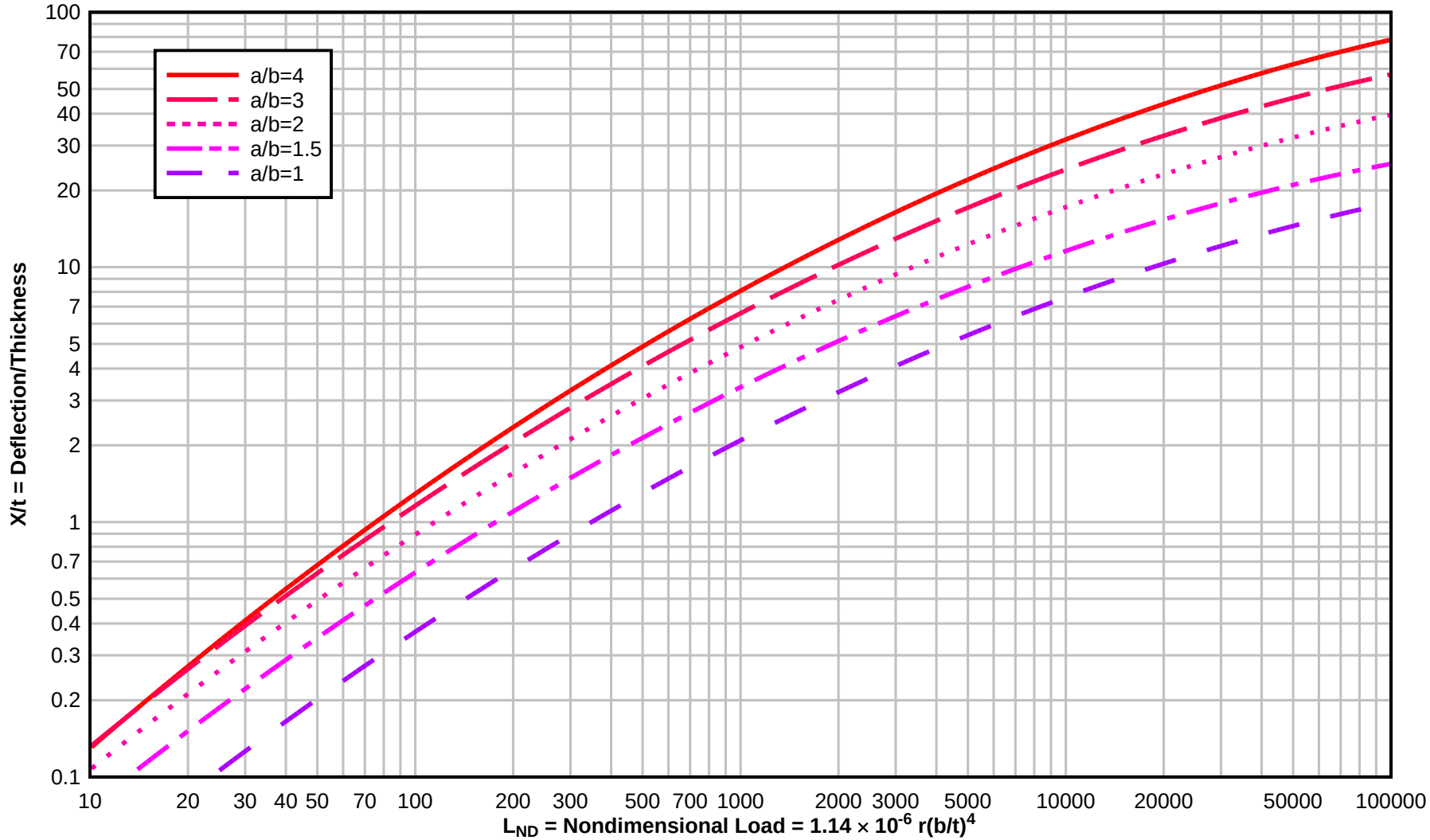

Figure 6-54 Edge, Face and Bite Requirements

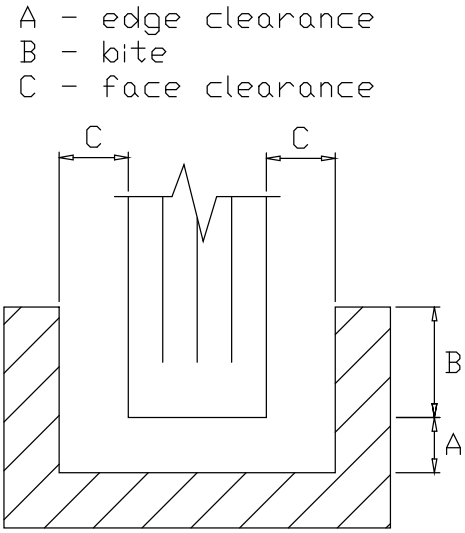

Figure 6-55 Distribution of Lateral Load Transmitted by Glass Pane to the Window Frame

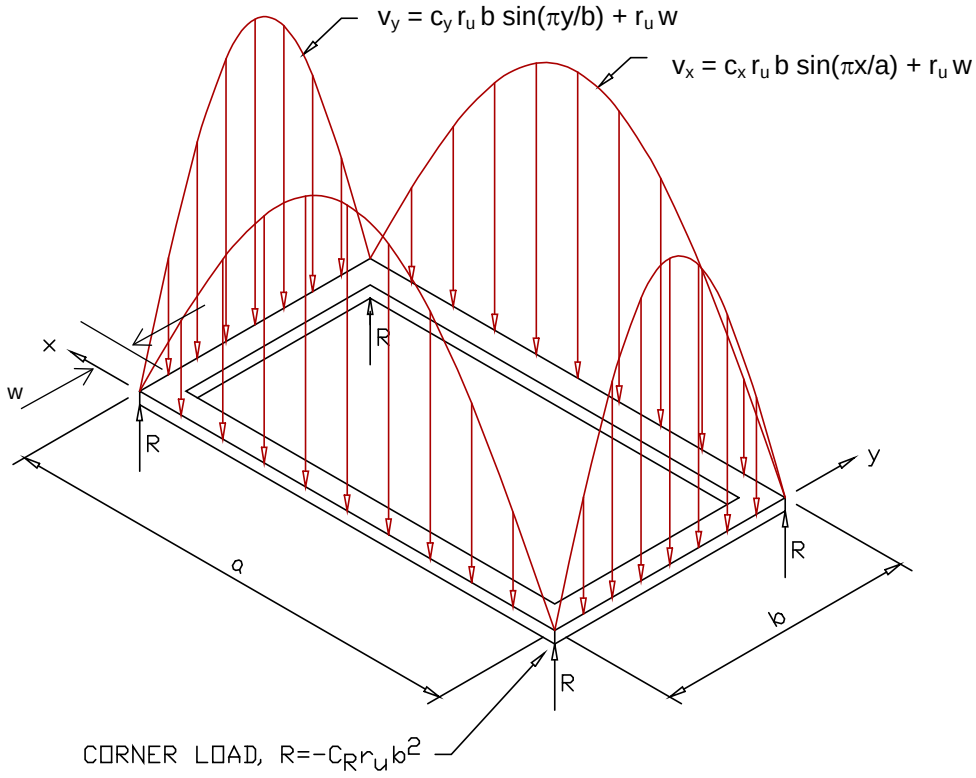

Table 6-7 Static Design Strength r_u (psi), for Tempered Glass* [*a* = long dimension of glass pane (in); *b* = short dimension of glass pane (in)]

Aspect Ratio = 1.00

Glass Size, b x a (in.)	Static Design Strength (psi) for a Window Thickness, t, of --					
	3/4 in.	5/8 in.	1/2 in.	3/8 in.	5/16 in.	1/4 in.
12x12	206	141	87.7	40.3	27.5	20.2
13x13	176	120	74.7	42.8	23.9	17.6
14x14	151	103	64.5	36.9	21.1	15.5
15x15	132	90.1	56.1	32.2	18.7	14.2
16x16	116	79.2	49.3	28.3	16.7	13.4
17x17	103	70.1	43.7	25.5	15.1	12.7
18x18	91.6	62.5	39.0	23.1	14.1	12.6
19x19	82.2	56.1	35.0	21.0	13.5	12.1
20x20	74.2	50.7	31.6	19.2	12.9	11.0
21x21	67.3	46.0	28.6	17.7	12.7	10.0
22x22	61.3	41.9	26.4	16.3	12.6	9.20
23x23	56.1	38.3	24.4	15.1	11.8	8.52
24x24	51.5	35.2	22.7	14.3	10.9	7.91
25x25	47.5	32.4	21.2	13.8	10.1	7.43
26x26	43.9	30.0	19.7	13.4	9.39	7.00
27x27	40.7	27.9	18.5	12.9	8.80	6.62
28x28	37.9	26.2	17.4	12.8	8.26	6.22
29x29	35.3	24.6	16.4	12.6	7.78	5.86
30x30	33.0	23.2	15.4	12.6	7.39	5.53
31x31	30.9	21.9	14.6	12.0	7.04	5.22
32x32	29.0	20.8	14.2	11.3	6.71	4.94
33x33	27.4	19.7	13.8	10.6	6.39	4.69
34x34	26.0	18.7	13.5	10.0	6.07	4.45
35x35	24.8	17.8	13.2	9.50	5.77	4.23
36x36	23.6	17.0	12.8	9.05	5.50	4.04
37x37	22.5	16.2	12.7	8.63	5.24	3.86
38x38	21.5	15.4	12.7	8.24	5.01	3.69
39x39	20.5	14.8	12.6	7.88	4.79	3.53
40x40	19.7	14.4	12.5	7.57	4.58	3.39
41x41	18.8	14.1	11.9	7.30	4.39	3.25
42x42	18.1	13.8	11.4	7.04	4.21	3.12
43x43	17.3	13.5	10.9	6.80	4.05	3.00
44x44	16.7	13.2	10.4	6.56	3.90	2.89
45x45	16.0	13.0	9.99	6.32	3.75	2.78
46x46	15.4	12.9	9.59	6.08	3.62	2.68
47x47	14.9	12.8	9.24	5.86	3.49	2.58
48x48	14.5	12.7	8.91	5.65	3.37	2.49
49x49	14.2	12.6	8.59	5.45	3.25	2.41
50x50	14.0	12.6	8.30	5.27	3.15	2.33
51x51	13.7	12.4	8.02	5.09	3.04	2.25
52x52	13.5	11.9	7.76	4.92	2.95	2.18
53x53	13.3	11.5	7.54	4.76	2.85	2.11
54x54	13.1	11.1	7.33	4.61	2.77	2.05
55x55	12.9	10.7	7.13	4.47	2.68	1.99
56x56	12.8	10.3	6.94	4.33	2.60	1.93
57x57	12.7	9.99	6.76	4.20	2.53	1.87
58x58	12.7	9.66	6.59	4.08	2.45	1.82
59x59	12.6	9.38	6.40	3.97	2.38	1.77
60x60	12.6	9.11	6.22	3.85	2.32	1.72

* Panes to the right and below the stepped dividing line behave according to large deflection plate theory.

Table 6-7 Static Design Strength r_u (psi), for Tempered Glass* [*a* = long dimension of glass pane (in); *b* = short dimension of glass pane (in)] (Continued)

Aspect Ratio = 1.25

Glass Size, b x a (in.)	Static Design Strength (psi) for a Window thickness, t, of --					
	3/4 in.	5/8 in.	1/2 in.	3/8 in.	5/16 in.	1/4 in.
12x15	154	105	65.5	37.5	20.5	15.4
13x16.25	131	89.5	55.8	32.0	17.9	13.5
14x17.5	113	77.2	48.1	27.6	15.8	12.3
15x18.75	98.5	67.2	41.9	24.0	14.2	11.1
16x20	86.6	59.1	36.8	21.1	13.0	10.2
17x21.25	76.7	52.4	32.6	19.0	12.0	9.86
18x22.5	68.4	46.7	29.1	17.2	11.1	9.78
19x23.75	61.4	41.9	26.1	15.8	10.3	9.72
20x25	55.4	37.8	23.6	14.6	9.96	9.54
21x26.25	50.3	34.3	21.4	13.6	9.79	8.69
22x27.5	45.8	31.3	19.7	12.8	9.78	7.95
23x28.75	41.9	28.6	18.2	12.0	9.70	7.30
24x30	38.5	26.3	17.0	11.3	9.49	6.75
25x31.25	35.5	24.2	15.9	10.7	8.77	6.27
26x32.5	32.8	22.4	14.9	10.2	8.14	5.83
27x33.75	30.4	20.8	14.1	9.98	7.57	5.45
28x35	28.3	19.5	13.4	9.80	7.07	5.12
29x36.25	26.4	18.4	12.8	9.79	6.63	4.81
30x37.5	24.6	17.4	12.3	9.77	6.23	4.54
31x38.75	23.1	16.4	11.7	9.71	5.87	4.31
32x40	21.7	15.6	11.2	9.65	5.54	4.09
33x41.25	20.4	14.9	10.7	9.22	5.25	3.90
34x42.5	19.4	14.2	10.3	8.71	4.98	3.71
35x43.75	18.5	13.6	10.1	8.24	4.74	3.53
36x45	17.6	13.1	9.93	7.81	4.52	3.36
37x46.25	16.8	12.7	9.80	7.41	4.32	3.20
38x47.5	16.1	12.3	9.79	7.05	4.14	3.06
39x48.75	15.5	11.8	9.78	6.72	3.97	2.92
40x50	14.8	11.4	9.75	6.42	3.82	2.80
41x51.25	14.3	11.0	9.71	6.13	3.66	2.68
42x52.5	13.8	10.6	9.66	5.87	3.51	2.57
43x53.75	13.4	10.3	9.47	5.63	3.37	2.47
44x55	13.0	10.2	9.06	5.40	3.24	2.37
45x56.25	12.6	10.0	8.68	5.19	3.11	2.28
46x57.5	12.3	9.87	8.32	5.00	3.00	2.19
47x58.75	11.9	9.80	7.99	4.81	2.89	2.11
48x60	11.5	9.79	7.67	4.64	2.78	2.03
49x61.25	11.2	9.78	7.37	4.49	2.68	1.96
50x62.5	10.9	9.77	7.11	4.34	2.59	1.89
51x63.75	10.6	9.74	6.85	4.21	2.50	1.83
52x65	10.3	9.70	6.61	4.08	2.42	1.77
53x66.25	10.2	9.67	6.38	3.96	2.34	1.71

* Panes to the right and below the stepped dividing line behave according to large deflection plate theory.

Table 6-7 Static Design Strength r_u (psi), for Tempered Glass* [*a* = long dimension of glass pane (in); *b* = short dimension of glass pane (in)] (Continued)

Aspect Ratio = 1.50

Glass Size, b x a (in.)	Static Design Strength (psi) for a Window thickness, t, of --					
	3/4 in.	5/8 in.	1/2 in.	3/8 in.	5/16 in.	1/4 in.
12x18	123	83.8	52.3	29.9	16.3	11.9
13x19.5	105	71.4	44.5	25.5	13.9	10.5
14x21	90.2	61.6	38.4	22.0	12.3	9.43
15x22.5	78.6	53.6	33.4	19.2	11.1	8.88
16x24	69.1	47.2	29.4	16.8	10.0	8.26
17x25.5	61.2	41.8	26.0	14.9	9.31	8.14
18x27	54.6	37.3	23.2	13.3	8.85	8.02
19x28.5	49.0	33.4	20.8	12.3	8.84	7.90
20x30	44.2	30.2	18.8	11.4	7.83	7.78
21x31.5	40.1	27.4	17.1	10.6	7.81	7.62
22x33	36.5	24.9	15.6	9.86	7.80	7.03
23x34.5	33.4	22.8	14.2	9.32	7.77	6.45
24x36	30.7	21.0	13.1	8.98	7.77	5.95
25x37.5	28.3	19.3	12.4	8.64	7.63	5.50
26x39	26.2	17.9	11.7	8.24	7.19	5.10
27x40.5	24.3	16.6	11.0	7.86	6.69	4.74
28x42	22.6	15.4	10.4	7.85	6.24	4.42
29x43.5	21.0	14.4	9.89	7.85	5.83	4.14
30x45	19.7	13.4	9.42	7.84	5.47	3.88
31x46.5	18.4	12.8	9.16	7.83	5.13	3.64
32x48	17.3	12.2	8.91	7.82	4.83	3.43
33x49.5	16.2	11.6	8.65	7.72	4.55	3.27
34x51	15.3	11.1	8.34	7.62	4.30	3.13
35x52.5	14.4	10.6	8.05	7.28	4.07	3.00
36x54	13.6	10.2	8.02	6.90	3.85	2.87
37x55.5	13.0	9.78	7.99	6.55	3.66	2.74
38x57	12.5	9.42	7.96	6.22	3.47	2.61
39x58.5	12.0	9.21	7.93	5.92	3.33	2.50
40x60	11.6	9.01	7.91	5.64	3.21	2.39
41x61.5	11.2	8.82	7.88	5.38	3.09	2.29
42x63	10.8	8.60	7.85	5.13	2.98	2.19
43x64.5	10.4	8.35	7.77	4.91	2.88	2.10
44x66	10.1	8.12	7.69	4.70	2.77	2.02
45x67.5	9.71	7.90	7.62	4.50	2.66	1.94
46x69	9.42	7.69	7.35	4.31	2.56	1.86
47x70.5	9.25	7.62	7.06	4.14	2.47	1.79
48x72	9.08	7.55	6.78	3.97	2.38	1.73

* Panes to the right and below the stepped dividing line behave according to large deflection plate theory.

Table 6-7 Static Design Strength r_u (psi), for Tempered Glass* [*a* = long dimension of glass pane (in); *b* = short dimension of glass pane (in)] (Continued)

Aspect Ratio = 1.75

Glass Size, b x a (in.)	Static Design Strength (psi) for a Window thickness, t, of --					
	3/4 in.	5/8 in.	1/2 in.	3/8 in.	5/16 in.	1/4 in.
12x21	109	74.2	46.3	26.5	14.4	10.2
13x22.75	92.6	63.2	39.4	22.6	12.3	8.91
14x24.5	79.9	54.5	34.0	19.5	10.6	8.01
15x26.25	69.6	47.5	29.6	17.0	9.46	7.32
16x28	61.2	41.7	26.0	14.9	8.52	6.83
17x29.75	54.2	37.0	23.0	13.2	7.85	6.36
18x31.5	48.3	33.0	20.6	11.8	7.30	5.93
19x33.25	43.4	29.6	18.5	10.6	6.88	5.76
20x35	39.1	26.7	16.7	9.71	6.49	5.73
21x36.75	35.5	24.2	15.1	8.96	6.12	5.70
22x38.5	32.4	22.1	13.8	8.36	5.84	5.68
23x40.25	29.6	20.2	12.6	7.87	5.73	5.57
24x42	27.2	18.6	11.6	7.43	5.71	5.27
25x43.75	25.1	17.1	10.7	7.11	5.70	5.00
26x45.5	23.2	15.8	9.97	6.81	5.69	4.67
27x47.25	21.5	14.7	9.37	6.52	5.66	4.35
28x49	20.0	13.6	8.83	6.24	5.45	4.05
29x50.75	18.6	12.7	8.38	5.98	5.21	3.79
30x52.5	17.4	11.9	8.01	5.82	4.98	3.56
31x54.25	16.3	11.1	7.66	5.74	4.70	3.36
32x56	15.3	10.4	7.35	5.73	4.43	3.17
33x57.75	14.4	9.93	7.11	5.71	4.17	3.00
34x59.5	13.5	9.46	6.89	5.70	3.94	2.85
35x61.25	12.8	9.02	6.67	5.69	3.73	2.72
36x63	12.1	8.62	6.45	5.67	3.54	2.60
37x64.75	11.4	8.30	6.24	5.63	3.37	2.49
38x66.5	10.8	8.00	6.04	5.44	3.21	2.37
39x68.25	10.3	7.73	5.87	5.26	3.06	2.26
40x70	9.91	7.47	5.80	5.09	2.93	2.16
41x71.75	9.52	7.26	5.74	4.93	2.82	2.06
42x73.5	9.15	7.07	5.72	4.71	2.71	1.97
43x75.25	8.81	6.90	5.70	4.50	2.61	1.89
44x77	8.50	6.73	5.69	4.30	2.51	1.81
45x78.75	8.24	6.55	5.70	4.12	2.42	1.74

* Panes to the right and below the stepped dividing line behave according to large deflection plate theory.

Table 6-7 Static Design Strength r_u (psi), for Tempered Glass* [*a* = long dimension of glass pane (in); *b* = short dimension of glass pane (in)] (Continued)

Aspect Ratio = 2.00

Glass Size, b x a (in.)	Static Design Strength (psi) for a Window thickness, t, of --					
	3/4 in.	5/8 in.	1/2 in.	3/8 in.	5/16 in.	1/4 in.
12x24	97.6	66.6	41.5	23.8	13.0	9.05
13x26	83.1	56.7	35.4	20.3	11.0	7.81
14x28	71.7	48.9	30.5	17.5	9.52	6.87
15x30	62.4	42.6	26.6	15.2	8.31	6.29
16x32	54.9	37.5	23.4	13.3	7.43	5.81
17x34	48.6	33.2	20.7	11.9	6.72	5.40
18x36	43.4	29.6	18.5	10.6	6.26	5.03
19x38	38.9	26.6	16.6	9.49	5.86	4.71
20x40	35.1	24.0	14.9	8.56	5.51	4.56
21x42	31.9	21.7	13.6	7.85	5.19	4.46
22x44	29.0	19.8	12.4	7.25	4.90	4.42
23x46	26.6	18.1	11.3	6.73	4.64	4.39
24x48	24.4	16.6	10.4	6.39	4.55	4.37
25x50	22.5	15.3	9.56	6.08	4.47	4.32
26x52	20.8	14.2	8.84	5.79	4.40	4.24
27x54	19.3	13.2	8.23	5.53	4.39	4.01
28x56	17.9	12.2	7.73	5.29	4.38	3.74
29x58	16.7	11.4	7.27	5.07	4.37	3.50
30x60	15.6	10.7	6.86	4.86	4.31	3.28
31x62	14.6	9.98	6.57	4.67	4.25	3.09
32x64	13.7	9.36	6.32	4.58	4.08	2.93
33x66	12.9	8.80	6.08	4.52	3.85	2.78
34x68	12.2	8.31	5.87	4.47	3.64	2.64
35x70	11.5	7.91	5.66	4.41	3.44	2.51
36x72	10.8	7.53	5.47	4.40	3.26	2.39
37x74	10.3	7.18	5.29	4.39	3.11	2.28
38x76	9.73	6.86	5.12	4.38	2.97	2.18
39x78	9.24	6.62	4.96	4.37	2.84	2.08
40x80	8.78	6.42	4.81	4.34	2.72	1.98
41x82	8.37	6.23	4.67	4.30	2.60	1.89
42x84	8.03	6.05	4.60	4.25	2.50	1.80

* Panes to the right and below the stepped dividing line behave according to large deflection plate theory.

Table 6-7 Static Design Strength r_u (psi), for Tempered Glass* [*a* = long dimension of glass pane (in); *b* = short dimension of glass pane (in)] (Continued)

Aspect Ratio = 3.00

Glass Size, b x a (in.)	Static Design Strength (psi) for a Window thickness, t, of --					
	3/4 in.	5/8 in.	1/2 in.	3/8 in.	5/16 in.	1/4 in.
12x36	81.1	55.4	34.5	19.8	10.8	7.53
13x39	69.1	47.2	29.4	16.9	9.18	6.41
14x42	59.6	40.7	25.4	14.5	7.92	5.57
15x45	51.9	35.4	22.1	12.7	6.90	4.94
16x48	45.6	31.2	19.4	11.1	6.06	4.42
17x51	40.4	27.6	17.2	9.86	5.43	3.98
18x54	36.1	24.6	15.3	8.79	4.92	3.61
19x57	32.4	22.1	13.8	7.89	4.48	3.29
20x60	29.2	19.9	12.4	7.12	4.10	3.01
21x63	26.5	18.1	11.3	6.46	3.77	2.80
22x66	24.1	16.5	10.3	5.88	3.48	2.61
23x69	22.1	15.1	9.40	5.44	3.22	2.44
24x72	20.3	13.8	8.63	5.06	3.00	2.29
25x75	18.7	12.8	7.95	4.71	2.82	2.15
26x78	17.3	11.8	7.35	4.40	2.66	2.08
27x81	16.0	10.9	6.82	4.13	2.51	2.01
28x84	14.9	10.2	6.34	3.88	2.38	1.95
29x87	13.9	9.48	5.91	3.65	2.26	1.89
30x90	13.0	8.86	5.56	3.44	2.14	1.83
31x93	12.2	8.30	5.26	3.25	2.08	1.80
32x96	11.4	7.79	4.98	3.08	2.03	1.78
33x99	10.7	7.32	4.72	2.93	1.97	1.76
34x102	10.1	6.90	4.48	2.80	1.92	1.77

* Panes to the right and below the stepped dividing line behave according to large deflection plate theory.

Table 6-7 Static Design Strength r_u (psi), for Tempered Glass* [*a* = long dimension of glass pane (in); *b* = short dimension of glass pane (in)] (Continued)

Aspect Ratio = 4.00

Glass Size, b x a (in.)	Static Design Strength (psi) for a Window thickness, t, of --					
	3/4 in.	5/8 in.	1/2 in.	3/8 in.	5/16 in.	1/4 in.
12x48	75.7	51.7	32.2	18.5	10.1	7.02
13x52	64.5	44.0	27.5	15.7	8.57	5.99
14x56	55.6	38.0	23.7	13.6	7.39	5.16
15x60	48.5	33.1	20.6	11.8	6.43	4.52
16x64	42.6	29.1	18.1	10.4	5.66	3.99
17x68	37.7	25.8	16.1	9.20	5.01	3.56
18x72	33.7	23.0	14.3	8.20	4.49	3.19
19x76	30.2	20.6	12.9	7.36	4.05	2.87
20x80	27.3	18.6	11.6	6.65	3.67	2.60
21x84	24.7	16.9	10.5	6.03	3.34	2.37
22x88	22.5	15.4	9.59	5.49	3.06	2.18
23x92	20.6	14.1	8.77	5.03	2.81	2.02
24x96	18.9	12.9	8.05	4.63	2.59	1.88
25x100	17.5	11.9	7.42	4.28	2.39	1.76
26x104	16.1	11.0	6.86	3.97	2.23	1.66
27x108	15.0	10.2	6.36	3.70	2.09	1.57
28x112	13.9	9.49	5.92	3.45	1.96	1.49
29x116	13.0	8.85	5.52	3.22	1.84	1.41
30x120	12.1	8.27	5.15	3.02	1.75	1.34

* Panes to the right and below the stepped dividing line behave according to large deflection plate theory.

Table 6-8 Minimum Design Thickness, Clearances, and Bite Requirements

Glass Thickness (Nominal)		Actual Glass Thickness For Design, *t*	"A" Minimum Edge Clearance	"B" Nominal Bite	"C" Minimum Face Clearance
(in)	(mm)	(in)	(in)	(in)	(in)
5/32	4.0	0.149	3/16	1/2	1/8
3/16	5.0	0.180	3/16	1/2	1/8
1/4	6.0	0.219	1/4	1/2	1/8
3/8	10.0	0.355	5/16	1/2	3/16
1/2	12.0	0.469	3/8	1/2	1/4
5/8	16.0	0.594	3/8	1/2	1/4
3/4	19.0	0.719	3/8	1/2	5/16

Table 6-9 Maximum (*b*/*t*) Ratio for Linear Plate Behavior under Blast Load and Coefficients for Resistance and Deflection and Fundamental Period of Simply Supported Glass Plates Based on Small Deflection Theory (No Tensile Membrane Behavior)

Aspect Ratio, *a*/*b*	Maximum (*b*/*t*) Ratio	Design Coefficients		
		Design Resistance, C_r	Design Deflection, C_D	Fundamental Period of Vibration, C_T
1.0	53.6	5.79×10^{4}	2.58×10^{-4}	5.21×10^{-3}
1.2	59.0	4.42×10^{4}	2.72×10^{-4}	6.30×10^{-3}
1.4	63.9	3.68×10^{4}	2.83×10^{-4}	7.21×10^{-3}
1.5	66.2	3.36×10^{4}	2.88×10^{-4}	7.60×10^{-3}
1.6	67.9	3.22×10^{4}	2.91×10^{-4}	7.99×10^{-3}
1.8	71.3	2.91×10^{4}	2.98×10^{-4}	8.65×10^{-3}
2.0	74.7	2.72×10^{4}	3.02×10^{-4}	9.23×10^{-3}
3.0	84.3	2.32×10^{4}	3.12×10^{-4}	10.12×10^{-3}
4.0	89.4	2.24×10^{4}	3.15×10^{-4}	10.36×10^{-3}
∞	89.4	2.24×10^{4}	3.15×10^{-4}	10.44×10^{-3}

Table 6-10 Coefficients for Frame Loading

a/b	C_R	C_x	C_y
1.00	0.065	0.495	0.495
1.10	0.070	0.516	0.516
1.20	0.074	0.535	0.533
1.30	0.079	0.554	0.551
1.40	0.083	0.570	0.562
1.50	0.085	0.581	0.574
1.60	0.086	0.590	0.583
1.70	0.088	0.600	0.591
1.80	0.090	0.609	0.600
1.90	0.091	0.616	0.607
2.00	0.092	0.623	0.614
3.00	0.093	0.644	0.655
4.00	0.094	0.687	0.685

Table 6-11 Statistical Acceptance and Rejection Coefficients

Number of Window Assemblies *n*	Acceptance Coefficient α	Rejection Coefficient ß
2	4.14	0.546
3	3.05	0.871
4	2.78	1.14
5	2.65	1.27
6	2.56	1.36
7	2.50	1.42
8	2.46	1.48
9	2.42	1.49
10	2.39	1.52
11	2.37	1.54
12	2.35	1.57
13	2.33	1.58
14	2.32	1.60
15	2.31	1.61
16	2.30	1.62
17	2.28	1.64
18	2.27	1.65
19	2.27	1.65
20	2.26	1.66
21	2.25	1.67
22	2.24	1.68
23	2.24	1.68
24	2.23	1.69
25	2.22	1.70
30	2.19	1.72
40	2.17	1.75
50	2.14	1.77

Table 6-12 Fundamental Period of Vibration, T_n, for Monolithic Tempered Glass

Aspect Ratio = 1.00

Glass Dimensions (in)		Fundamental Period of Vibration (msec) for Window Thickness, *t*, of --					
b	***a***	**3/4 in**	**5/8 in**	**1/2 in**	**3/8 in**	**5/16 in**	**1/4 in**
12	12	1.05	1.27	1.61	2.13	2.83	3.38
13	13	1.23	1.49	1.89	2.50	3.29	3.93
14	14	1.43	1.73	2.19	2.89	3.76	4.50
15	15	1.64	1.99	2.52	3.30	4.39	5.09
16	16	1.87	2.26	2.87	3.72	4.95	5.68
17	17	2.11	2.55	3.23	4.17	5.53	6.27
18	18	2.37	2.86	3.63	4.63	6.12	6.84
19	19	2.64	3.19	4.02	5.10	6.71	7.42
20	20	2.92	3.54	4.43	5.77	7.30	8.08
21	21	3.22	3.90	4.86	6.32	7.89	8.76
22	22	3.53	4.28	5.30	6.89	8.44	9.45
23	23	3.86	4.68	5.75	7.48	9.06	10.2
24	24	4.21	5.07	6.23	8.07	9.72	10.9
25	25	4.56	5.47	6.70	8.65	10.4	11.6
26	26	4.94	5.89	7.40	9.25	11.1	12.3
27	27	5.32	6.33	7.94	9.84	11.8	13.1
28	28	5.72	6.77	8.50	10.4	12.5	13.8
29	29	6.12	7.23	9.07	11.0	13.2	14.6
30	30	6.52	7.70	9.65	11.5	14.0	15.3
31	31	6.93	8.17	10.3	12.2	14.7	16.1
32	32	7.36	8.64	10.8	12.8	15.4	16.9
33	33	7.80	9.41	11.4	13.5	16.1	17.8
34	34	8.24	9.95	12.0	14.2	16.9	18.6
35	35	8.70	10.5	12.6	14.9	17.7	19.4
36	36	9.17	11.1	13.2	15.6	18.4	20.2
37	37	9.64	11.6	13.8	16.3	19.2	21.0
38	38	10.1	12.2	14.3	17.0	20.0	21.9
39	39	11.0	12.8	14.9	17.7	20.9	22.8
40	40	11.4	13.4	15.5	18.5	21.7	23.6
41	41	12.0	14.0	16.1	19.2	22.5	24.5
42	42	12.5	14.6	16.8	19.9	23.3	25.4
43	43	13.1	15.2	17.4	20.6	24.1	26.3
44	44	13.6	15.8	18.1	21.3	25.0	27.2
45	45	14.2	16.4	18.8	22.1	25.8	28.1
46	46	14.8	16.9	19.5	22.8	26.7	29.0
47	47	15.4	17.5	20.2	23.6	27.5	30.8
48	48	16.0	18.1	20.9	24.4	28.4	31.7
49	49	16.6	18.7	21.6	25.2	29.3	32.6
50	50	17.2	19.2	22.3	26.0	30.2	33.5
51	51	17.7	19.8	23.0	26.8	31.1	34.4
52	52	18.3	20.4	23.8	27.6	32.0	35.4
53	53	19.0	21.1	24.5	28.4	32.9	35.4
54	54	19.5	21.8	25.2	29.2	33.7	36.3
55	55	20.1	22.4	26.0	30.0	34.6	37.3
56	56	20.7	23.1	26.7	30.8	35.5	38.2
57	57	21.3	23.8	27.4	31.6	36.4	39.2
58	58	21.8	24.5	28.1	32.5	37.3	40.1
59	59	22.4	25.2	28.8	33.3	38.2	41.1
60	60	23.0	25.9	29.6	34.1	39.2	42.1

Table 6-12 Fundamental Period of Vibration, T_n, for Monolithic Tempered Glass (Continued)

Aspect Ratio = 1.25

Glass Dimensions (in)		Fundamental Period of Vibration (msec) for Window Thickness, *t*, of --					
b	***a***	**3/4 in**	**5/8 in**	**1/2 in**	**3/8 in**	**5/16 in**	**1/4 in**
12	15	1.40	1.69	2.14	2.83	3.82	4.39
13	16.25	1.64	1.99	2.52	3.32	4.41	5.04
14	17.5	1.90	2.30	2.92	3.85	5.03	5.99
15	18.75	2.18	2.64	3.35	4.42	5.68	6.77
16	20	2.49	3.01	3.81	5.03	6.61	7.57
17	21.25	2.81	3.40	4.30	5.61	7.36	8.34
18	22.5	3.15	3.81	4.82	6.21	8.14	9.08
19	23.75	3.50	4.24	5.37	6.83	8.94	9.82
20	25	3.88	4.70	5.95	7.48	9.72	10.6
21	26.25	4.28	5.18	6.56	8.12	10.5	11.5
22	27.5	4.70	5.69	7.14	9.19	11.2	12.4
23	28.75	5.14	6.22	7.73	9.95	12.0	13.3
24	30	5.59	6.77	8.34	10.7	12.7	14.3
25	31.25	6.07	7.34	8.96	11.5	13.6	15.2
26	32.5	6.56	7.94	9.60	12.3	14.5	16.2
27	33.75	7.08	8.56	10.3	13.1	15.5	17.2
28	35	7.61	9.13	10.9	13.9	16.4	18.2
29	36.25	8.16	9.71	12.1	14.6	17.3	19.2
30	37.5	8.74	10.3	12.9	15.3	18.3	20.2
31	38.75	9.33	11.0	13.6	16.1	19.3	21.2
32	40	9.94	11.6	14.4	16.8	20.3	22.3
33	41.25	10.5	12.2	15.2	17.7	21.3	23.3
34	42.5	11.1	12.9	16.0	18.6	22.3	24.4
35	43.75	11.7	13.5	16.8	19.5	23.3	25.5
36	45	12.3	14.8	17.6	20.4	24.3	26.6
37	46.25	12.9	15.5	18.3	21.3	25.3	27.7
38	47.5	13.5	16.3	19.1	22.3	26.3	28.8
39	48.75	14.2	17.0	19.8	23.2	27.4	29.9
40	50	14.8	17.8	20.5	24.2	28.4	31.0
41	51.25	15.5	18.6	21.3	25.1	29.5	32.2
42	52.5	16.1	19.4	22.0	26.1	30.6	33.4
43	53.75	16.8	20.2	22.8	27.1	31.7	34.6
44	55	18.2	21.0	23.7	28.1	32.8	35.7
45	56.25	18.9	21.8	24.6	29.1	33.9	37.0
46	57.5	19.7	22.5	25.5	30.1	35.0	38.2
47	58.75	20.5	23.3	26.4	31.1	36.2	39.4
48	60	21.2	24.0	27.4	32.1	37.3	40.6
49	61.25	22.0	24.8	28.3	33.1	38.5	41.8
50	62.5	22.8	25.5	29.2	34.1	39.6	43.1
51	63.75	23.6	26.2	30.2	35.2	40.8	44.3
52	65	24.4	27.0	31.1	36.2	42.0	45.6
53	66.25	25.2	27.8	32.1	37.2	43.2	46.8

Table 6-12 Fundamental Period of Vibration, T_n, for Monolithic Tempered Glass (Continued)

Aspect Ratio = 1.50

Glass Dimensions (in)		Fundamental Period of Vibration (msec) for Window Thickness, *t*, of --					
b	***a***	**3/4 in**	**5/8 in**	**1/2 in**	**3/8 in**	**5/16 in**	**1/4 in**
12	18	1.59	1.92	2.43	3.22	4.36	5.09
13	19.5	1.86	2.26	2.86	3.78	5.12	5.83
14	21	2.16	2.62	3.31	4.38	5.84	6.61
15	22.5	2.48	3.00	3.80	5.03	6.56	7.79
16	24	2.82	3.42	4.33	5.72	7.32	8.70
17	25.5	3.19	3.86	4.89	6.46	8.09	9.63
18	27	3.57	4.33	5.48	7.23	9.37	10.5
19	28.5	3.98	4.82	6.10	7.93	10.3	11.3
20	30	4.41	5.34	6.76	8.65	11.2	12.1
21	31.5	4.86	5.89	7.46	9.40	12.1	13.0
22	33	5.34	6.46	8.18	10.2	13.0	14.1
23	34.5	5.83	7.06	8.94	10.9	13.8	15.1
24	36	6.35	7.69	9.71	12.4	14.6	16.2
25	37.5	6.89	8.34	10.4	13.3	15.5	17.3
26	39	7.46	9.02	11.1	14.2	16.5	18.4
27	40.5	8.04	9.73	11.9	15.1	17.6	19.6
28	42	8.65	10.5	12.6	16.0	18.6	20.7
29	43.5	9.28	11.2	13.4	16.9	19.7	21.9
30	45	9.93	12.0	14.2	17.8	20.8	23.1
31	46.5	10.6	12.7	14.9	18.5	21.9	24.3
32	48	11.3	13.4	16.6	19.3	23.1	25.5
33	49.5	12.0	14.1	17.5	20.2	24.2	26.7
34	51	12.8	14.9	18.4	21.1	25.4	27.8
35	52.5	13.5	15.6	19.3	22.1	26.6	29.0
36	54	14.3	16.4	20.2	23.2	27.8	30.3
37	55.5	15.0	17.2	21.2	24.3	28.9	31.5
38	57	15.7	18.0	22.1	25.3	30.2	32.8
39	58.5	16.4	18.7	22.9	26.4	31.3	34.1
40	60	17.2	20.5	23.8	27.5	32.5	35.4
41	61.5	17.9	21.4	24.5	28.6	33.7	36.7
42	63	18.6	22.3	25.3	29.7	34.9	38.1
43	64.5	19.4	23.2	26.2	30.8	36.1	39.4
44	66	20.2	24.2	27.1	32.0	37.4	40.8
45	67.5	21.0	25.1	28.0	33.1	38.7	42.2
46	69	21.7	26.0	29.0	34.3	40.0	43.6
47	70.5	22.4	26.9	30.0	35.5	41.3	45.0
48	72	24.5	27.8	31.1	36.7	42.6	46.4

Table 6-12 Fundamental Period of Vibration, T_n, for Monolithic Tempered Glass (Continued)

Aspect Ratio = 1.75

Glass Dimensions (in)		Fundamental Period of Vibration (msec) for Window Thickness, *t*, of --					
b	***a***	**3/4 in**	**5/8 in**	**1/2 in**	**3/8 in**	**5/16 in**	**1/4 in**
12	21	1.69	2.04	2.59	3.42	4.63	5.52
13	22.75	1.98	2.40	3.04	4.01	5.44	6.37
14	24.5	2.30	2.78	3.52	4.65	6.30	7.27
15	26.25	2.64	3.19	4.04	5.34	7.15	8.20
16	28	3.00	3.63	4.60	6.08	8.02	9.52
17	29.75	3.39	4.10	5.19	6.86	8.93	10.6
18	31.5	3.80	4.60	5.82	7.69	9.85	11.7
19	33.25	4.23	5.12	6.49	8.57	11.2	12.8
20	35	4.69	5.68	7.19	9.41	12.3	13.8
21	36.75	5.17	6.26	7.92	10.3	13.4	14.8
22	38.5	5.67	6.87	8.70	11.2	14.5	15.8
23	40.25	6.20	7.51	9.51	12.1	15.6	16.8
24	42	6.75	8.17	10.4	13.0	16.6	18.0
25	43.75	7.33	8.87	11.2	13.9	17.6	19.1
26	45.5	7.92	9.59	12.1	15.5	18.6	20.3
27	47.25	8.54	10.3	12.9	16.6	19.6	21.6
28	49	9.19	11.1	13.8	17.7	20.7	22.9
29	50.75	9.86	11.9	14.7	18.8	21.8	24.2
30	52.5	10.6	12.8	15.6	19.8	23.0	25.5
31	54.25	11.3	13.6	16.5	20.9	24.2	26.9
32	56	12.0	14.5	17.5	22.0	25.4	28.2
33	57.75	12.8	15.4	18.3	22.9	26.7	29.6
34	59.5	13.6	16.2	20.1	23.9	28.0	30.9
35	61.25	14.4	17.1	21.2	24.9	29.4	32.3
36	63	15.2	17.9	22.3	25.9	30.7	33.6
37	64.75	16.1	18.8	23.3	27.0	32.0	35.0
38	66.5	16.9	19.8	24.4	28.1	33.4	36.5
39	68.25	17.8	20.7	25.5	29.3	34.7	38.0
40	70	18.6	21.6	26.6	30.4	36.1	39.5
41	71.75	19.5	22.5	27.7	31.5	37.4	40.9
42	73.5	20.3	24.4	28.7	32.8	38.8	42.5
43	75.25	21.2	25.4	29.7	34.0	40.2	44.0
44	77	22.1	26.5	30.7	35.3	41.6	45.5
45	78.75	23.0	27.6	31.7	36.6	43.0	47.1

Table 6-12 Fundamental Period of Vibration, T_n, for Monolithic Tempered Glass (Continued)

Aspect Ratio = 2.00

Glass Dimensions (in)		Fundamental Period of Vibration (msec) for Window Thickness, *t*, of --					
b	***a***	**3/4 in**	**5/8 in**	**1/2 in**	**3/8 in**	**5/16 in**	**1/4 in**
12	24	1.78	2.16	2.73	3.61	4.89	5.85
13	26	2.09	2.53	3.21	4.24	5.74	6.82
14	28	2.43	2.94	3.72	4.91	6.66	7.84
15	30	2.78	3.37	4.27	5.64	7.63	8.89
16	32	3.17	3.83	4.86	6.42	8.61	9.96
17	34	3.58	4.33	5.48	7.24	9.64	11.4
18	36	4.01	4.85	6.15	8.12	10.7	12.7
19	38	4.47	5.41	6.85	9.05	11.8	13.9
20	40	4.95	5.99	7.59	10.0	13.3	15.2
21	42	5.46	6.61	8.37	11.09	14.5	16.4
22	44	5.99	7.25	9.18	12.0	15.7	17.6
23	46	6.55	7.92	10.0	13.0	17.0	18.8
24	48	7.13	8.63	10.9	14.1	18.3	19.9
25	50	7.73	9.36	11.9	15.2	19.5	21.1
26	52	8.37	10.1	12.8	16.2	20.7	22.2
27	54	9.02	10.9	13.8	17.9	21.9	23.5
28	56	9.70	11.7	14.8	19.1	23.0	24.9
29	58	10.4	12.6	15.8	20.3	24.1	26.4
30	60	11.1	13.5	16.8	21.6	25.3	27.9
31	62	11.9	14.4	17.8	22.9	26.4	29.3
32	64	12.7	15.3	18.9	24.1	27.7	30.8
33	66	13.5	16.3	20.0	25.3	29.1	32.3
34	68	14.3	17.3	21.17	26.6	30.5	33.8
35	70	15.2	18.3	22.1	27.8	32.0	35.3
36	72	16.0	19.2	24.0	28.9	33.5	36.8
37	74	16.9	20.3	25.2	30.1	35.0	38.4
38	76	17.9	21.3	26.5	31.2	36.5	40.0
39	78	18.8	22.3	27.7	32.4	37.9	41.6
40	80	19.8	23.4	29.0	33.5	39.4	43.2
41	82	20.8	24.5	30.3	34.7	40.9	44.9
42	84	21.7	25.6	31.5	35.8	42.4	46.6

Table 6-12 Fundamental Period of Vibration, T_n, for Monolithic Tempered Glass (Continued)

Aspect Ratio = 3.00

Glass Dimensions (in)		Fundamental Period of Vibration (msec) for Window Thickness, *t*, of --					
b	***a***	**3/4 in**	**5/8 in**	**1/2 in**	**3/8 in**	**5/16 in**	**1/4 in**
12	36	2.02	2.45	3.10	4.10	5.55	6.64
13	39	2.37	2.87	3.64	4.81	6.51	7.79
14	42	2.75	3.33	4.22	5.58	7.55	9.02
15	45	3.16	3.83	4.84	6.40	8.67	10.3
16	48	3.60	4.35	5.51	7.28	9.87	11.6
17	51	4.06	4.91	6.22	8.22	11.1	13.1
18	54	4.55	5.51	6.98	9.22	12.4	14.5
19	57	5.07	6.14	7.77	10.3	13.7	16.4
20	60	5.62	6.80	8.61	11.4	15.1	18.1
21	63	6.19	7.50	9.50	12.6	16.6	19.8
22	66	6.80	8.23	10.4	13.8	18.1	21.6
23	69	7.43	8.99	11.4	15.0	20.1	23.4
24	72	8.09	9.79	12.4	16.3	21.7	25.3
25	75	8.78	10.6	13.5	17.6	23.5	27.2
26	78	9.49	11.5	14.6	19.0	25.3	29.1
27	81	10.2	12.4	15.7	20.4	27.1	31.0
28	84	11.0	13.3	16.9	21.8	28.9	32.9
29	87	11.8	14.3	18.1	23.3	30.8	34.9
30	90	12.6	15.3	19.3	24.8	32.8	36.8
31	93	13.5	16.3	20.6	26.9	34.7	38.7
32	96	14.4	17.4	21.9	28.6	36.5	40.5
33	99	15.3	18.5	23.2	30.3	38.4	42.3
34	102	16.2	19.7	24.6	32.0	40.4	44.1

Table 6-12 Fundamental Period of Vibration, T_n, for Monolithic Tempered Glass (Continued)

Aspect Ratio = 4.00

Glass Dimensions (in)		Fundamental Period of Vibration (msec) for Window Thickness, *t*, of --					
b	***a***	**3/4 in**	**5/8 in**	**1/2 in**	**3/8 in**	**5/16 in**	**1/4 in**
12	48	2.09	2.53	3.21	4.24	5.75	6.87
13	52	2.46	2.97	3.77	4.98	6.74	8.07
14	56	2.85	3.45	4.37	5.77	7.82	9.36
15	60	3.27	3.96	5.02	6.63	8.98	10.7
16	64	3.72	4.51	5.71	7.54	10.2	12.2
17	68	4.20	5.09	6.44	8.51	11.5	13.7
18	72	4.71	5.70	7.22	9.54	12.9	15.3
19	76	5.25	6.35	8.05	10.6	14.3	17.0
20	80	5.82	7.04	8.92	11.8	15.9	18.9
21	84	6.41	7.76	9.83	13.1	17.4	20.8
22	88	7.04	8.52	10.8	14.3	19.1	22.8
23	92	7.69	9.31	11.8	15.6	20.8	24.8
24	96	8.37	10.1	12.8	16.9	22.8	26.9
25	100	9.09	11.0	13.9	18.3	24.7	29.1
26	104	9.83	11.9	15.1	19.8	26.6	31.3
27	108	10.6	12.8	16.3	21.3	28.6	33.5
28	112	11.4	13.8	17.5	22.9	30.7	35.8
29	116	12.2	14.8	18.8	24.5	32.8	38.2
30	120	13.1	15.8	20.1	26.2	35.0	40.6

Table 6-13 Effective Elastic Static Resistance, r_{eff}

Aspect Ratio = 1.00

Glass Dimensions (in)		Effective Elastic Static Resistance (psi) for Glass Thickness, *t*, of --					
b	***a***	**3/4 in**	**5/8 in**	**1/2 in**	**3/8 in**	**5/16 in**	**1/4 in**
12	12	206	140	87.7	50.3	27.5	19.1
13	13	175	119	74.7	42.8	23.9	16.3
14	14	151	103	64.5	36.9	21.1	14.2
15	15	131	90.1	56.1	32.2	17.5	12.7
16	16	115	79.2	49.3	28.3	15.5	11.6
17	17	102	70.1	43.7	25.5	13.8	10.7
18	18	91.6	62.5	39.0	23.1	12.6	10.3
19	19	82.2	56.1	35.0	21.0	11.7	9.75
20	20	74.2	50.7	31.6	18.0	11.0	8.76
21	21	67.3	46.0	28.6	16.4	10.4	7.93
22	22	61.3	41.9	26.4	15.1	10.2	7.20
23	23	56.1	38.3	24.4	13.9	9.51	6.57
24	24	51.5	35.2	22.7	12.9	8.71	6.01
25	25	47.5	32.4	21.2	12.2	8.01	5.56
26	26	43.9	23.0	18.6	11.5	7.39	5.19
27	27	40.7	27.9	17.3	11.0	6.83	4.87
28	28	37.9	26.2	16.2	10.5	6.33	4.55
29	29	35.3	24.6	15.1	10.3	5.89	4.25
30	30	33.0	23.2	14.2	10.2	5.53	3.98
31	31	30.9	21.9	13.4	9.61	5.22	3.74
32	32	29.0	20.8	12.8	9.00	4.95	3.51
33	33	27.4	18.5	12.2	8.45	4.68	3.31
34	34	26.0	17.5	11.7	7.95	4.42	3.14
35	35	24.8	16.6	11.3	7.49	4.18	2.98
36	36	23.6	15.7	10.9	7.06	3.96	2.82
37	37	22.5	14.9	10.5	6.67	3.75	2.67
38	38	21.5	14.2	10.4	6.31	3.57	2.54
39	39	19.4	13.5	10.3	5.98	3.39	2.42
40	40	18.5	13.0	10.1	5.70	3.24	2.30
41	41	17.6	12.6	9.59	5.45	3.09	2.19
42	42	16.8	12.1	9.12	5.22	2.96	2.09
43	43	16.1	11.7	8.69	5.02	2.83	2.00
44	44	15.4	11.4	8.29	4.83	2.70	1.92
45	45	14.8	11.1	7.92	4.63	2.59	1.84
46	46	14.2	10.8	7.57	4.43	2.48	1.77
47	47	13.6	10.5	7.24	4.25	2.38	1.70
48	48	13.2	10.4	6.93	4.08	2.29	1.64
49	49	12.8	10.3	6.64	3.92	2.20	1.58
50	50	12.4	10.2	6.37	3.77	2.11	1.52
51	51	12.1	9.96	6.11	3.63	2.04	1.47
52	52	11.7	9.56	5.87	3.50	1.96	1.42
53	53	11.4	9.19	5.67	3.37	1.90	1.38
54	54	11.2	8.84	5.48	3.26	1.83	1.33
55	55	10.9	8.52	5.30	3.15	1.77	1.29
56	56	10.7	8.21	5.14	3.05	1.72	1.25
57	57	10.5	7.92	4.99	2.95	1.66	1.21
58	58	10.4	7.64	4.85	2.85	1.61	1.17
59	59	10.3	7.40	4.70	2.76	1.56	1.14
60	60	10.2	7.10	4.55	2.67	1.52	1.11

Table 6-13 Effective Elastic Static Resistance, r_{eff} (Continued)

Aspect Ratio = 1.25

Glass Dimensions (in)		Effective Elastic Static Resistance (psi) for Glass Thickness, *t*, of --					
b	***a***	**3/4 in**	**5/8 in**	**1/2 in**	**3/8 in**	**5/16 in**	**1/4 in**
12	15	154	105	65.5	37.5	20.5	15.2
13	16.25	131	89.5	55.8	32.0	17.9	13.5
14	17.5	113	77.2	48.1	27.6	15.8	11.0
15	18.75	98.5	67.2	41.9	24.0	14.2	9.84
16	20	86.6	59.1	36.8	21.1	11.9	8.91
17	21.25	76.7	52.4	32.6	19.0	10.8	8.36
18	22.5	68.4	46.7	29.1	17.2	9.79	8.12
19	23.75	61.4	41.9	26.1	15.8	8.99	7.86
20	25	55.4	37.8	23.6	14.6	8.50	7.49
21	26.25	50.3	34.3	21.4	13.6	8.19	6.73
22	27.5	45.8	31.3	19.7	11.6	8.07	6.11
23	28.75	41.9	28.6	18.2	10.8	7.79	5.57
24	30	38.5	26.3	17.0	10.1	7.44	5.09
25	31.25	35.5	24.2	15.9	9.40	6.81	4.68
26	32.5	32.8	22.4	14.9	8.89	6.27	4.31
27	33.75	30.4	20.8	14.1	8.53	5.79	4.00
28	35	28.3	19.5	13.4	8.25	5.37	3.73
29	36.25	26.4	18.4	11.7	8.14	4.99	3.49
30	37.5	24.6	17.4	11.0	8.04	4.65	3.28
31	38.75	23.1	16.4	10.4	7.82	4.34	3.09
32	40	21.7	15.6	9.91	7.62	4.07	2.92
33	41.25	20.4	14.9	9.41	7.21	3.84	2.76
34	42.5	19.4	14.2	8.99	6.75	3.62	2.61
35	43.75	18.5	13.6	8.70	6.35	3.43	2.47
36	45	17.6	12.0	8.45	5.99	3.26	2.34
37	46.25	16.8	11.5	8.25	5.66	3.10	2.22
38	47.5	16.1	11.0	8.16	5.35	2.96	2.12
39	48.75	15.5	10.6	8.09	5.07	2.82	2.01
40	50	14.8	10.1	7.98	4.81	2.69	1.91
41	51.25	14.3	9.72	7.81	4.57	2.57	1.82
42	52.5	13.8	9.34	7.66	4.34	2.45	1.74
43	53.75	13.4	9.01	7.43	4.14	2.34	1.66
44	55	11.8	8.78	7.06	3.96	2.25	1.59
45	56.25	11.4	8.57	6.72	3.79	2.16	1.52
46	57.5	11.0	8.38	6.42	3.63	2.07	1.46
47	58.75	10.6	8.24	6.14	3.49	1.98	1.40
48	60	10.3	8.17	5.88	3.36	1.90	1.34
49	61.25	9.93	8.11	5.63	3.23	1.83	1.29
50	62.5	9.60	8.06	5.39	3.12	1.76	1.25
51	63.75	9.29	7.93	5.18	3.01	1.69	1.20
52	65	9.02	7.80	4.97	2.90	1.63	1.16
53	66.25	8.82	7.68	4.78	2.80	1.57	1.12

Table 6-13 Effective Elastic Static Resistance, r_{eff} (Continued)

Aspect Ratio = 1.50

Glass Dimensions (in)		Effective Elastic Static Resistance (psi) for Glass Thickness, *t*, of --					
b	***a***	**3/4 in**	**5/8 in**	**1/2 in**	**3/8 in**	**5/16 in**	**1/4 in**
12	18	123	83.8	52.3	29.9	16.3	11.9
13	19.5	105	71.4	44.5	25.5	13.9	10.5
14	21	90.2	61.6	38.4	22.0	12.3	9.43
15	22.5	78.6	53.6	33.4	19.2	11.1	7.86
16	24	69.1	47.2	29.4	16.8	10.1	7.16
17	25.5	61.2	41.8	26.0	14.9	9.31	6.56
18	27	54.6	37.3	23.2	13.3	7.83	6.25
19	28.5	49.0	33.4	20.8	12.3	7.24	6.30
20	30	44.2	30.2	18.8	11.4	6.71	6.23
21	31.5	40.1	27.4	17.1	10.6	6.37	5.91
22	33	36.5	24.9	15.6	9.86	6.16	5.36
23	34.5	33.4	22.8	14.23	9.32	6.35	4.86
24	36	30.7	21.0	13.1	7.99	6.21	4.44
25	37.5	28.3	19.3	12.4	7.56	5.94	4.08
26	39	26.2	17.9	11.7	7.13	5.51	3.75
27	40.5	24.3	16.6	11.0	6.75	5.06	3.47
28	42	22.6	15.4	10.4	6.46	4.68	3.21
29	43.5	21.0	14.4	9.89	6.28	4.35	2.99
30	45	19.7	13.4	9.42	6.18	4.05	2.79
31	46.5	18.4	12.8	9.16	6.33	3.78	2.61
32	48	17.3	12.2	7.90	6.32	3.54	2.45
33	49.5	16.2	11.6	7.57	6.11	3.32	2.33
34	51	15.3	11.1	7.24	5.92	3.12	2.21
35	52.5	14.4	10.6	6.94	5.59	2.93	2.10
36	54	13.6	10.2	6.66	5.24	2.77	2.00
37	55.5	13.0	9.78	6.46	4.94	2.62	1.90
38	57	12.5	9.42	6.32	4.67	2.49	1.81
39	58.5	12.0	9.21	6.20	4.42	2.38	1.72
40	60	11.6	8.03	6.22	4.19	2.28	1.64
41	61.5	11.2	7.78	6.33	3.98	2.18	1.57
42	63	10.8	7.52	6.36	3.78	2.09	1.49
43	64.5	10.4	7.26	6.20	3.60	2.01	1.42
44	66	10.1	7.02	6.05	3.43	1.92	1.36
45	67.5	9.71	6.79	5.91	3.27	1.84	1.30
46	69	9.42	6.57	5.65	3.13	1.77	1.25
47	70.5	9.25	6.45	5.39	2.99	1.70	1.20
48	72	8.12	6.33	5.14	2.86	1.63	1.15

Table 6-13 Effective Elastic Static Resistance, r_{eff} (Continued)

Aspect Ratio = 1.75

Glass Dimensions (in)		Effective Elastic Static Resistance (psi) for Glass Thickness, *t*, of --					
b	***a***	**3/4 in**	**5/8 in**	**1/2 in**	**3/8 in**	**5/16 in**	**1/4 in**
12	21	109	74.2	46.3	26.5	14.4	10.2
13	22.75	92.6	63.2	39.4	22.6	12.3	8.91
14	24.5	79.9	54.5	34.0	19.5	10.6	8.01
15	26.25	69.6	47.5	29.6	17.0	9.46	7.32
16	28	61.2	41.7	26.0	14.9	8.52	6.20
17	29.75	54.2	37.0	23.1	13.2	7.85	5.65
18	31.5	48.3	33.0	20.6	11.7	7.30	5.19
19	33.25	43.4	29.6	18.5	10.67	6.27	4.89
20	35	39.1	26.7	16.7	9.71	5.79	4.70
21	36.75	35.5	24.2	15.1	8.96	5.38	4.64
22	38.5	32.4	22.1	13.8	8.36	5.05	4.50
23	40.25	29.6	20.2	12.6	7.87	4.84	4.31
24	42	27.2	18.6	11.6	7.43	4.70	4.02
25	43.75	25.1	17.1	10.7	7.11	4.65	3.79
26	45.5	23.2	15.8	9.97	6.17	4.54	3.51
27	47.25	21.5	14.7	9.37	5.82	4.41	3.24
28	49	20.0	13.6	8.83	5.52	4.19	3.00
29	50.75	18.6	12.7	8.38	5.23	3.96	2.78
30	52.5	17.4	11.9	8.01	5.02	3.77	2.60
31	54.25	16.3	11.1	7.66	4.86	3.53	2.43
32	56	15.3	10.4	7.35	4.73	3.30	2.29
33	57.75	14.4	9.93	7.11	4.68	3.09	2.16
34	59.5	13.5	9.46	6.27	4.64	2.90	2.05
35	61.25	12.8	9.02	6.00	4.56	2.73	1.94
36	63	12.1	8.62	5.74	4.46	2.58	1.85
37	64.75	11.4	8.30	5.51	4.36	2.44	1.76
38	66.5	10.8	8.00	5.30	4.18	2.32	1.67
39	68.25	10.3	7.73	5.10	4.01	2.21	1.59
40	70	9.91	7.47	4.97	3.86	2.11	1.51
41	71.75	9.52	7.26	4.85	3.72	2.02	1.44
42	73.5	9.15	6.51	4.75	3.53	1.93	1.38
43	75.25	8.81	6.29	4.70	3.36	1.85	1.32
44	77	8.50	6.07	4.67	3.20	1.78	1.26
45	78.75	8.24	5.86	4.64	3.05	1.71	1.20

Table 6-13 Effective Elastic Static Resistance, r_{eff} (Continued)

Aspect Ratio = 2.00

Glass Dimensions (in)		Effective Elastic Static Resistance (psi) for Glass Thickness, *t*, of --					
b	***a***	**3/4 in**	**5/8 in**	**1/2 in**	**3/8 in**	**5/16 in**	**1/4 in**
12	24	97.6	66.6	41.5	23.8	13.0	9.05
13	26	83.1	56.7	35.4	20.3	11.0	7.81
14	28	71.7	48.9	30.5	17.5	9.52	6.87
15	30	62.4	42.6	26.6	15.2	8.31	6.29
16	32	54.9	37.5	23.4	13.4	7.43	5.81
17	34	48.6	33.2	20.7	11.9	6.72	4.98
18	36	43.4	29.6	18.5	10.6	6.26	4.54
19	38	38.9	26.6	16.6	9.49	5.86	4.19
20	40	35.1	24.0	14.9	8.56	5.12	3.93
21	42	31.9	21.7	13.6	7.85	4.72	3.74
22	44	29.0	19.8	12.4	7.25	4.40	3.59
23	46	26.6	18.1	11.3	6.73	4.11	3.48
24	48	24.4	16.6	10.4	6.39	3.92	3.42
25	50	22.5	15.3	9.56	6.08	3.75	3.33
26	52	20.8	14.2	8.84	5.79	3.62	3.24
27	54	19.3	13.2	8.23	5.15	3.51	3.04
28	56	17.9	12.2	7.73	4.85	3.45	2.81
29	58	16.7	11.4	7.27	4.58	3.40	2.61
30	60	15.6	10.7	6.86	4.36	3.32	2.42
31	62	14.6	9.98	6.57	4.15	3.25	2.27
32	64	13.7	9.36	6.32	3.99	3.10	2.14
33	66	12.9	8.80	6.08	3.86	2.90	2.02
34	68	12.2	8.31	5.87	3.74	2.72	1.91
35	70	11.5	7.91	5.66	3.64	2.56	1.81
36	72	10.8	7.53	5.07	3.56	2.41	1.72
37	74	10.3	7.18	4.84	3.49	2.28	1.63
38	76	9.73	6.86	4.64	3.45	2.17	1.56
39	78	9.24	6.62	4.46	3.41	2.06	1.48
40	80	8.78	6.42	4.30	3.36	1.97	1.41
41	82	8.37	6.23	4.14	3.30	1.88	1.34
42	84	8.03	6.05	4.02	3.25	1.80	1.28

Table 6-13 Effective Elastic Static Resistance, r_{eff} (Continued)

Aspect Ratio = 3.00

Glass Dimensions (in)		Effective Elastic Static Resistance (psi) for Glass Thickness, *t*, of --					
b	***a***	**3/4 in**	**5/8 in**	**1/2 in**	**3/8 in**	**5/16 in**	**1/4 in**
12	36	81.1	55.4	34.5	19.8	10.8	7.53
13	39	69.1	47.2	29.4	16.9	9.18	6.41
14	42	59.6	40.7	25.4	14.5	7.92	5.57
15	45	51.9	35.4	22.1	12.7	6.90	4.94
16	48	45.6	31.2	19.4	11.1	6.06	4.42
17	51	40.4	27.6	17.2	9.86	5.43	3.98
18	54	36.1	24.6	15.3	8.79	4.92	3.61
19	57	32.4	22.1	13.8	7.89	4.48	3.15
20	60	29.2	19.9	12.4	7.12	4.10	2.86
21	63	26.5	18.1	11.3	6.46	3.77	2.64
22	66	24.1	16.5	10.3	5.88	3.48	2.45
23	69	22.1	15.1	9.40	5.44	3.08	2.25
24	72	20.3	13.8	8.63	5.06	2.84	2.08
25	75	18.7	12.8	7.95	4.71	2.66	1.92
26	78	17.3	11.8	7.35	4.40	2.49	1.82
27	81	16.0	10.9	6.82	4.13	2.34	1.74
28	84	14.9	10.2	6.34	3.88	2.18	1.66
29	87	13.9	9.48	5.91	3.65	2.04	1.58
30	90	13.0	8.86	5.56	3.44	1.91	1.51
31	93	12.2	8.30	5.26	3.11	1.83	1.47
32	96	11.4	7.79	4.98	2.93	1.76	1.43
33	99	10.7	7.32	4.72	2.78	1.70	1.41
34	102	10.1	6.90	4.48	2.64	1.63	1.39

Table 6-13 Effective Elastic Static Resistance, r_{eff} (Continued)

Aspect Ratio = 4.00

Glass Dimensions (in)		Effective Elastic Static Resistance (psi) for Glass Thickness, *t*, of --					
b	***a***	**3/4 in**	**5/8 in**	**1/2 in**	**3/8 in**	**5/16 in**	**1/4 in**
12	48	75.7	51.7	32.2	18.5	10.1	7.02
13	52	64.5	44.0	27.5	15.7	8.57	5.99
14	56	55.6	38.0	23.7	13.6	7.39	5.16
15	60	48.5	33.1	20.6	11.8	6.43	4.52
16	64	42.6	29.1	18.1	10.4	5.66	3.99
17	68	37.7	25.8	16.1	9.20	5.01	3.56
18	72	33.7	23.0	14.3	8.20	4.49	3.19
19	76	30.2	20.6	12.9	7.36	4.05	2.87
20	80	27.3	18.6	11.6	6.65	3.67	2.54
21	84	24.7	16.9	10.5	6.03	3.34	2.30
22	88	22.5	15.4	9.59	5.49	3.06	2.10
23	92	20.6	14.1	8.77	5.03	2.81	1.94
24	96	18.9	12.9	8.05	4.63	2.52	1.79
25	100	17.5	11.9	7.42	4.28	2.32	1.67
26	104	16.1	11.0	6.86	3.97	2.15	1.56
27	108	15.0	10.2	6.36	3.70	2.00	1.46
28	112	13.9	9.49	5.92	3.45	1.88	1.38
29	116	13.0	8.85	5.52	3.22	1.76	1.30
30	120	12.1	8.27	5.15	3.02	1.66	1.23

UNDERGROUND STRUCTURES

6-33 INTRODUCTION.

Underground structures are not usually used for production and handling of explosives since access for both personnel and explosives is more difficult than for an aboveground structure. However, an explosion may result in severe hazards from which an aboveground structure cannot provide adequate protection and a buried structure will be required. An example might be a manned control building at a test site which must be located very close to a high-hazard operation involving a relatively large quantity of explosives.

There is limited test data available to predict the pressures acting on an underground structure. What test data that is available was developed for use in the design of protective structures to resist the effects of an attack with conventional weapons. The results of this data and the design procedures developed from it are given in the technical manual, “Fundamentals of Protective Design for Conventional Weapons,” TM 5-855-1. The data presented may be expanded to include the design of structures subjected to accidental explosions. The pertinent sections are briefly summarized below.

A typical underground structure used to resist conventional weapons attack is shown in Figure 6-56 (+). The burster slab prevents a weapon from penetrating through the soil and detonating adjacent to the structure. A burster slab is not mandatory, but if it is not used the structure will have to be buried much deeper. The burster slab must extend far enough beyond the edge of the building to form at least a 45 degree angle with the bottom edge of the building. It may have to be extended further, though, if it is possible for a bomb to penetrate at a very shallow angle, travel beneath the burster slab and detonate adjacent to the structure (see Figure 6-56). Sand is used as backfill because materials with high volume of air-filled voids and low relative densities are poor transmitters of ground shock. In addition, sand resists penetration better than soil.

6-34 DESIGN LOADS FOR UNDERGROUND STRUCTURES.

6-34.1 General.

The pressure-time relationships for roof panels and exterior walls are determined separately. For the roof panel, an overhead burst produces the most critical loading while for an exterior wall a sideburst is critical. A general description of the procedure for determining the peak pressures and their durations is given below. For a more detailed description, including the required equations, see TM 5-855-1.

The magnitude of the ground shock is affected by:

1. The size of the explosive charge and its distance from the structure;
2. The mechanical properties of the soil, rock, and/or concrete between the detonation point and the structure; and

3. The depth of penetration at the time of detonation.

The stresses and ground motions are greatly enhanced as the depth of the explosion increases. To account for this effect a coupling factor is used. The coupling factor is defined as the ratio of the ground shock magnitude from a near surface burst to that of a fully buried burst. A single coupling factor applies to all ground shock parameters and depends on the depth of the explosion and whether detonation occurs in soil, concrete or air.

6-34.2 Roof Loads.

A typical roof load (shown in Figure 6-57 (+)) consists of a free-field pressure P_o and a reflected pressure P_r. The reflected pressure occurs when the free-field pressure impinges on the roof panel and is instantly increased to a higher pressure. The amount of increase is a function of the pressure in the free-field wave and the angle formed between the rigid surface and the plane of the pressure front. However, TM 5-855-1 suggests that an average reflection factor of 1.5 is reasonable.

The pressures on the roof of an underground structure are not uniform across the panel, especially if the depth of the explosion is shallow. However, in order to use a single-degree-of-freedom analysis, a uniform load is required and hence an average uniform pressure must be determined. TM 5-855-1 presents figures that give the ratio peak pressures at the center of a roof panel to the average pressure across the entire panel. This ratio is a function of the support conditions and aspect ratio of the panel and the height of the burst above the roof.

For the most severe roof load the explosive is positioned directly over the center of the panel. The average free-field and average reflected pressures are calculated as described above. The duration of the pressure pulse also varies across the roof panel and a fictitious average duration t_o must be determined. TM 5-855-1 recommends calculating the duration of the peak free-field pressure pulse at a point located one quarter of the way along the short span and at the center of the long span. This duration is then used as the average duration of the entire panel. The peak free-field pressure and impulse are calculated using equations given in TM 5-855-1. The duration is found by assuming a triangular pressure-time relationship. The duration of the average reflected pressure t_r is given in TM 5-855-1 as a function of either the thickness of the structural element or the distance to the nearest free edge of the structure. The smaller of the two numbers should be used in analysis.

6-34.3 Wall Loads.

The design loads on an exterior wall are determined using the procedures described in Section 6-34.2 for roof loads. However, in addition to the pressure wave traveling directly from the explosion, the wall may be subject to a pressure wave reflected off the ground surface or burster slab and/or a pressure wave reflected off a lower rock layer or water table.

The parameters of each wave (average reflected pressure, average free-field pressure, durations and time of arrival) are determined separately using procedures very similar to those described in Section 6-34.2. The total pressure-time history is equal to the superposition of the three waves as shown in Figure 6-58 (+). The superposition results in a very complicated load shape. The response charts of Chapter 3 are not applicable for such a shape, therefore the load must be idealized. The actual load is transformed into a triangular load having the same total impulse (area under the actual load curve equal to the sum of the areas of the direct and reflected waves). The maximum pressure of the idealized load is equal to the maximum pressure of the actual load neglecting the short reflected peaks. The duration is then established as a function of the total impulse and maximum pressure (Figure 6-58). For an exact solution, the actual load curve is used in a single-degree-of-freedom computer program analysis or numerical analysis as given in Section 3-19.2.

6-35 STRUCTURAL DESIGN.

6-35.1 Wall and Roof Slabs.

The structural design of underground structures is very similar to the design of aboveground structures as described in Chapter 4. The effect of the soil is to modify the response of the structural components. The dead load of the soil reduces the resistance available to resist blast. At the same time a portion of the soil acts with the structural elements to increase the natural period of vibration. In the case of a wall, it is assumed that the mass of two (2) feet of soil acts with the mass of the wall. Whereas for a roof, the entire mass of the soil supported by the roof, or a depth of soil equal to one quarter of the roof span (short span for a two-way panel) whichever is smaller, is added to the mass of the roof.

The dynamic response of underground structures must obviously be limited to comparatively small deformations to prevent collapse of the structure due to earth loads. A maximum deflection corresponding to a support rotation of two (2) degrees or a ductility ratio of 10.0 is permitted for underground structures subjected to accidental explosions. In calculating the maximum deflection of underground structures, static deflection due to soil overburden must be considered.

Spalling is the ejection of material from the back face of a slab or beam. It results from high-intensity, close-in explosions. Fragment shields or backing plates, as shown in Figure 6-59 (+), are of some value in protecting personnel and equipment. These steel plates must be securely anchored to the inside face of the concrete member. Tests have shown that the shock of a deep penetrating detonation to be enough to cause inadequate welds to fail over a large area, adding the whole steel plate to the concrete spall. A strongly attached plate adds about 10 percent to the perforation resistance of a concrete slab. For a further discussion of backing plates, see Chapter 4.

6-35.2 Burster Slab.

For protective structures, a burster slab prevents a weapon from penetrating through the soil and detonating adjacent to the structure. Its thickness and length may have to be determined by a trial and error procedure in order to limit pressures on the structure to a given value. However, the minimum dimensions are shown in Figure 6-56 (+). The minimum reinforcement is 0.1 percent in each face, in each direction or a total of 0.4 percent. In the design of structures subject to accidental explosions, the ground floor slab of the donor building serves a purpose similar to that of a burster slab. The floor slab helps to prevent fragment penetration and to attenuate the load.

6-36 STRUCTURE MOTIONS.

6-36.1 Shock Spectra.

TM 5-855-1 gives equations for acceleration, velocity and displacements for underground structures. These simplified methods take into account the attenuation of the pressure wave as it transverses the structure. For a sideburst, the vertical acceleration, velocity and displacements are 20 percent of the horizontal values. The horizontal motions are uniform over the entire floor while vertical motions at the leading edge are twice those at midspan.

Once the peak in-structure acceleration, velocity and displacements have been determined an in-structure shock spectra can be developed using the principles of Chapter 2 of this manual.

6-36.2 Shock Isolation Systems.

Chapter 1 presents the upper limits of the shock environment that personnel and equipment can tolerate. If the shock environment exceeds human tolerances and/or equipment “fragility levels” then shock isolation systems are required to protect personnel and sensitive equipment. Using the shock spectra developed as described above, shock isolation systems are designed as outlined in Sections 6-43 through 6-49.

Figure 6-56 Geometry of a Buried Structure

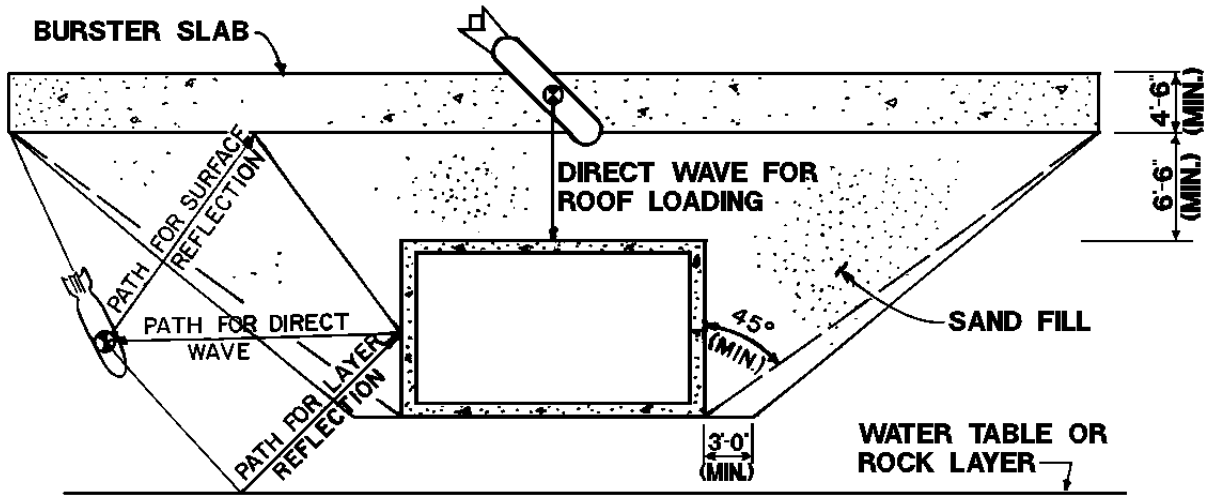

Figure 6-57 Typical Roof Panel Load

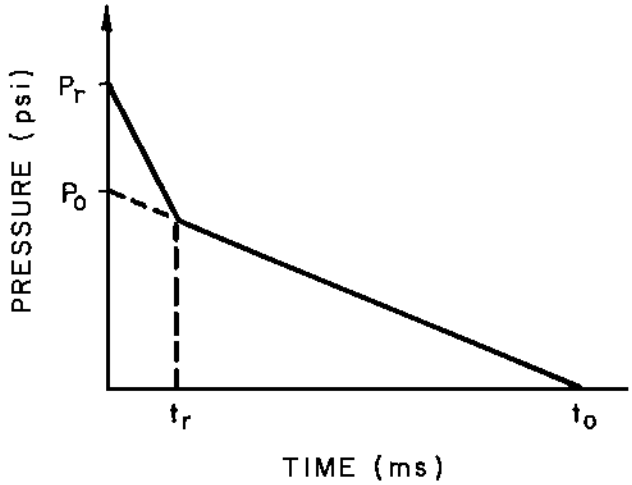

Figure 6-58 Contribution of Three Pressure Waves on a Wall

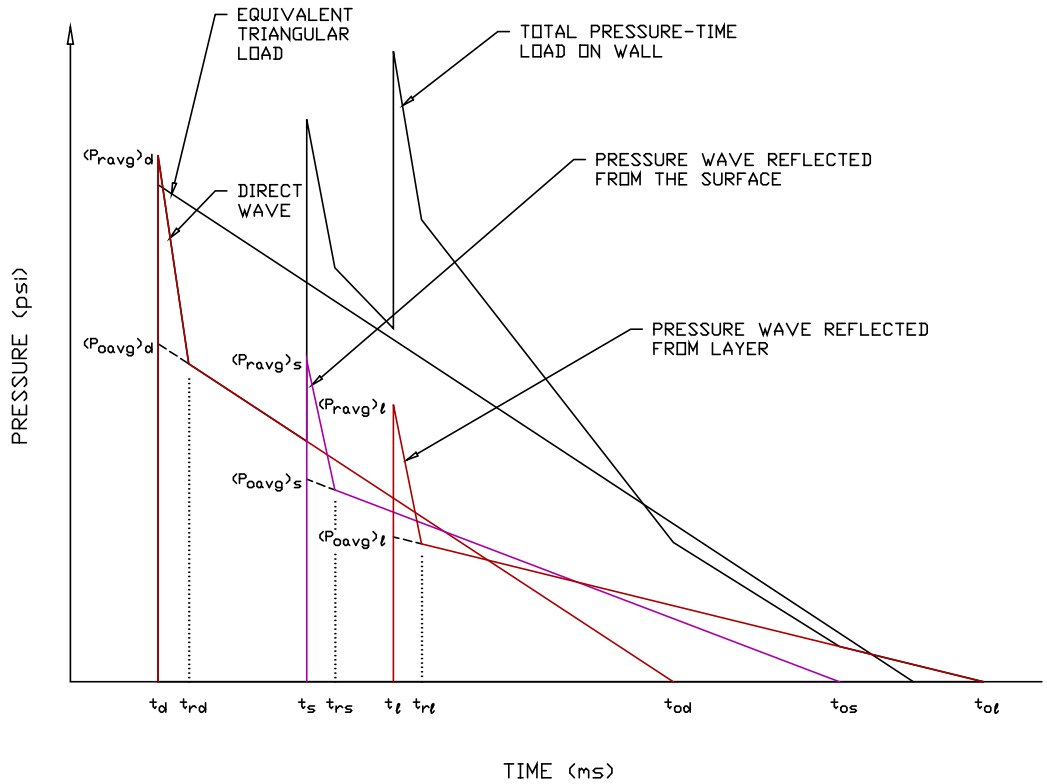

Figure 6-59 Spall Plate

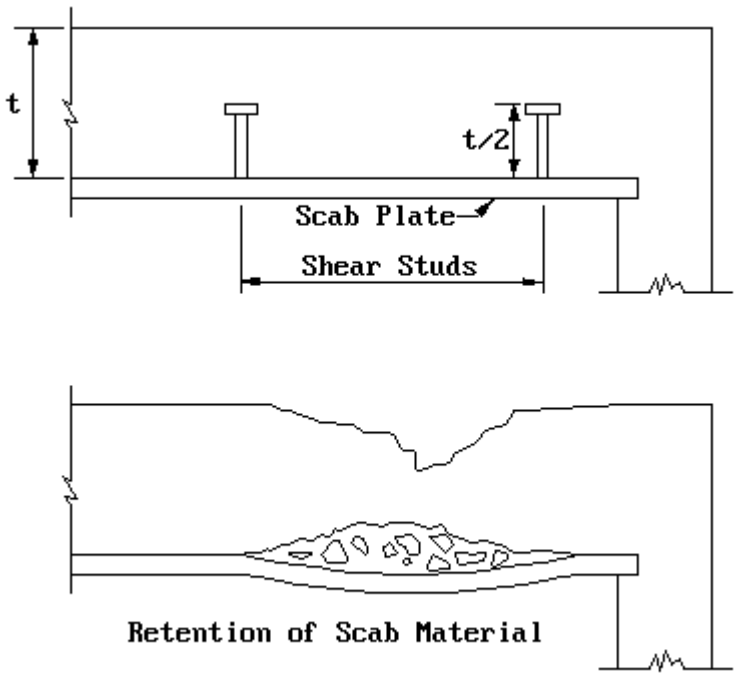

EARTH-COVERED ARCH-TYPE MAGAZINES

6-37 GENERAL

Certain types of earth-covered concrete-arch and steel-arch magazines have been approved and standardized for use by the Department of Defense Explosives Safety Board. These magazines provide definite advantages over other types of magazines. Among these advantages are:

1. Less real estate per magazine is required because of the decreased intermagazine separations permitted when approved magazines are used.
2. An almost infinite number of storage situations exists because magazines can be designed to any length.
3. Because of the reduced separation distances, less roads, fences, utilities, etc., are required.

Unlike the other structures discussed elsewhere in this manual, an earth-covered magazine is not designed to resist the damaging effects of its exploding contents. It is accepted that the magazine will be demolished if an internal explosion occurs. During such an incident, the inside of a large-span arch might experience initial blast pressures considerably in excess of 10,000 psi. Less than 100 psi could lift the arch completely

out of the ground; therefore, the major portion of the protection is provided by the receiver magazines rather than the donor magazine.

Earth-covered magazines are utilized primarily to prevent propagation of explosion. These structures may also be used for operating buildings and can provide personnel protection. In such cases, separation distances greater than those required to prevent propagation of explosions will be necessary. In addition, a special evaluation of the structure is required. This evaluation must include the leakage of blast pressures into the protected area, the strength and attachment of easily damaged or lightly supported accessories which may become hazardous debris, the transmission of shock to personnel through the walls or floors, and overall movement of the magazines.

6-38 DESCRIPTION OF EARTH-COVERED ARCH-TYPE MAGAZINES.

A typical earth-covered arch-type magazine used for storing explosives has the following features:

1. A semicircular or oval arch constructed of reinforced concrete or corrugated steel used to form roof and sides.
2. A reinforced concrete floor slab, sloped for drainage.
3. A reinforced concrete rear wall.
4. A reinforced concrete headwall that extends at least 2-1/2 feet above the crown of the arch.
5. Reinforced concrete wingwalls on either side of the headwall. The wingwalls may slope to the ground or may adjoin wingwalls from adjacent magazines. The wingwalls may be either monolithic or separated by expansion joints from the headwall.
6. Heavy steel doors in the headwall (either manually operated and/or motorized).
7. An optional gravity ventilation system.
8. Earth cover over the top, sides and rear of the structure. This cover must be at least 2 feet thick at the crown of the arch. The earth above the structure (within the spring line of each arch and between the head and rear walls) is sloped for drainage while beyond the outline of the structure the earth is sloped 2 horizontal to 1 vertical.
9. Its own built-in lightning protection and grounding systems.

A typical earth-covered steel arch magazine is illustrated in Figure 6-60 (+).

6-39 SEPARATION DISTANCES OF STANDARD MAGAZINES.

Numerous full scale tests of standard magazines have been performed over a period of several years. As a result magazine separation formulae have been established, which will prevent magazine-to-magazine propagation of explosions. All possible right angle arrangements have been considered, i.e., side-to-side, rear-to-rear, front-to-rear, etc. The standard magazines, which are at least equivalent in strength to those tested, are listed in the DoD Standard, "DoD Ammunition and Explosives Safety Standards, 6055.9-STD." The required separation distances, as a function of the quantity of explosives stored in the structure are also given in the DoD Standard. A possible magazine arrangement is shown in Figure 6-61 (+).

6-40 DESIGN.

Protection of magazines adjacent to a donor magazine is accomplished by combining the following factors:

1. The intensity of the pressure front moving from the donor magazine to receiver magazines diminishes rapidly as the distance traveled increases.
2. The earth cover over and around the donor magazine provides some confinement and tends to directionalize the explosive force both upward and outward from the door end of the magazine.
3. The earth around and over receiver magazines resists fragment penetrations and provides mass to the arch to resist the blast pressures.
4. The arch of receiver magazines is capable of resisting blast loads considerably in excess of the dead loads normally imposed on it.

Design of presently used magazines is essentially conventional except for two features, which are doors and arch. The doors are designed to withstand the dynamic forces from an explosion in a nearby magazine if the siting is in accordance with Figure 6-61 (+). However, they provide almost no resistance to the effects of an explosion within the magazine. Also, the capacity of the doors to resist elastic rebound and negative phase pressures may be less than their capacity to resist positive phase pressures. Therefore, where personnel are concerned, all doors should be analyzed to determine their ultimate capacity to resist all the loadings involved. The arches used for the standard earth-covered magazines are the same as those used in the test structures to establish the required separation distances. These arches have not been dynamically designed for the blast loads and may be in excess of that required.

6-41 CONSTRUCTION.

Effectiveness of earth-covered magazines is largely determined by the quality of construction. A few of the construction details that could be sources for problems in this type of structure are discussed below.

Moisture proofing of any earth-covered structure is usually difficult. This difficulty is increased with a steel-arch structure because of the many lineal feet of joints available for introducing moisture. For example, a large 26- by 80-foot magazine contains approximately 1,050 feet of edges. A sealant tape must be used that will not deteriorate or excessively deform under any anticipated environmental or structural condition.

Earthfill material should be clean, cohesive, and free from large stones. A minimum earth cover of two feet must be maintained. Surface preparation of the fill is usually required to prevent erosion of the 2-foot cover.

Restricting granular size of material reduces throwout of fragments in case of an accidental explosion and creates a more uniform energy absorbent over the top of the magazine.

Lightning protection is rather easily obtained in a steel-arch structure. All sections of steel-arch plate must be interconnected so that they become electrically continuous. In a concrete-arch magazine, the reinforcing steel must be interconnected. In effect, a “cage” is created about the magazine contents. Probably the most critical point for lightning protection is the optional ventilator stack which projects above the surrounding earth cover.

6-42 NON-STANDARD MAGAZINES.

Non-standard earth-covered magazines, that is magazines not listed in DoD Standard 6055.9-STD may also be used for explosive storage. However, if a “non-standard” earth-covered magazine or an aboveground magazine is used the separation distances must be increased. The DoD Standard 6055.9-STD includes the increased separation distances, as well as other criteria, for “nonstandard” earth-covered and aboveground magazines.

Figure 6-60 Typical Earth-Covered Steel-Arch Magazine

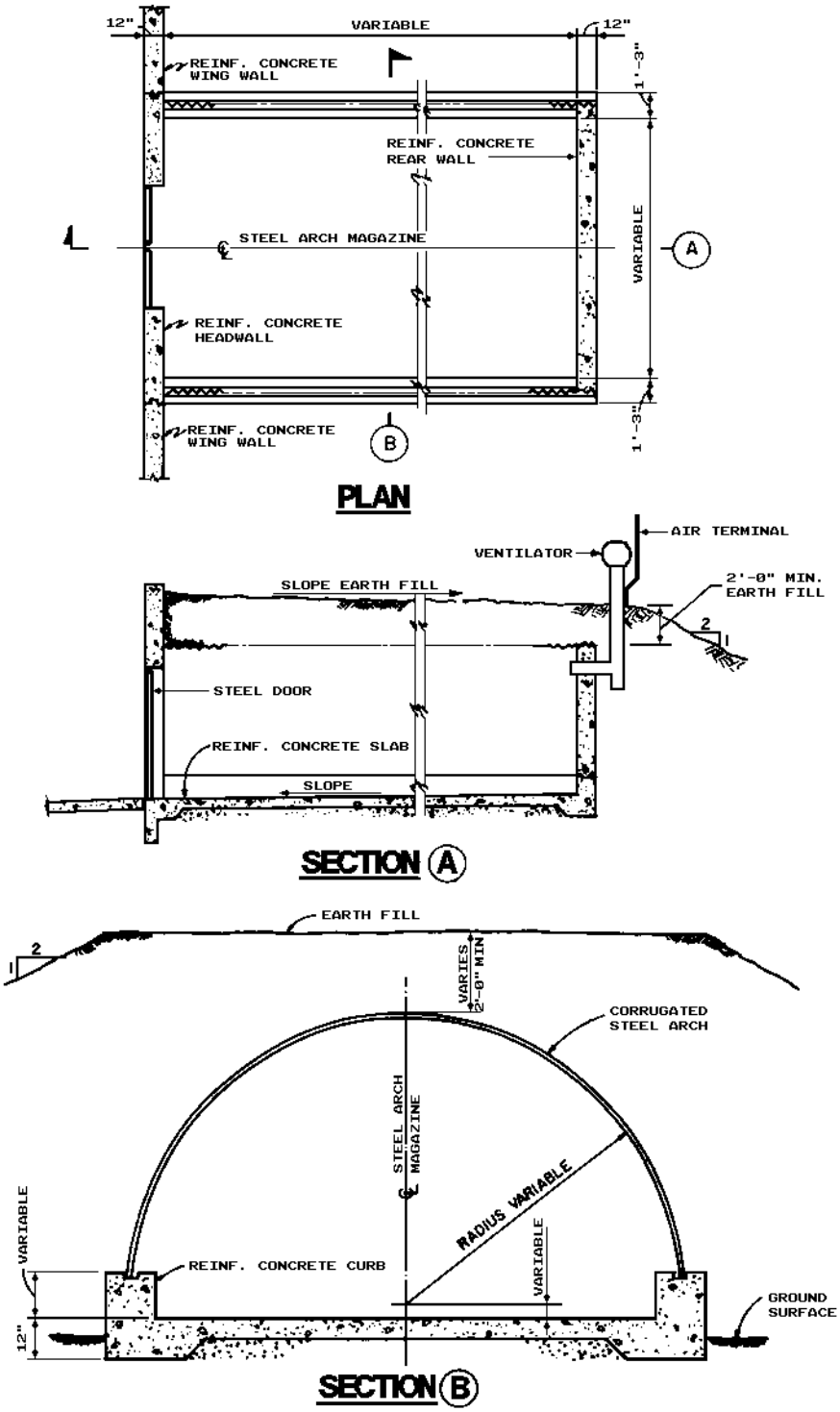

Figure 6-61 Minimum Separation Distances of Standard Magazine

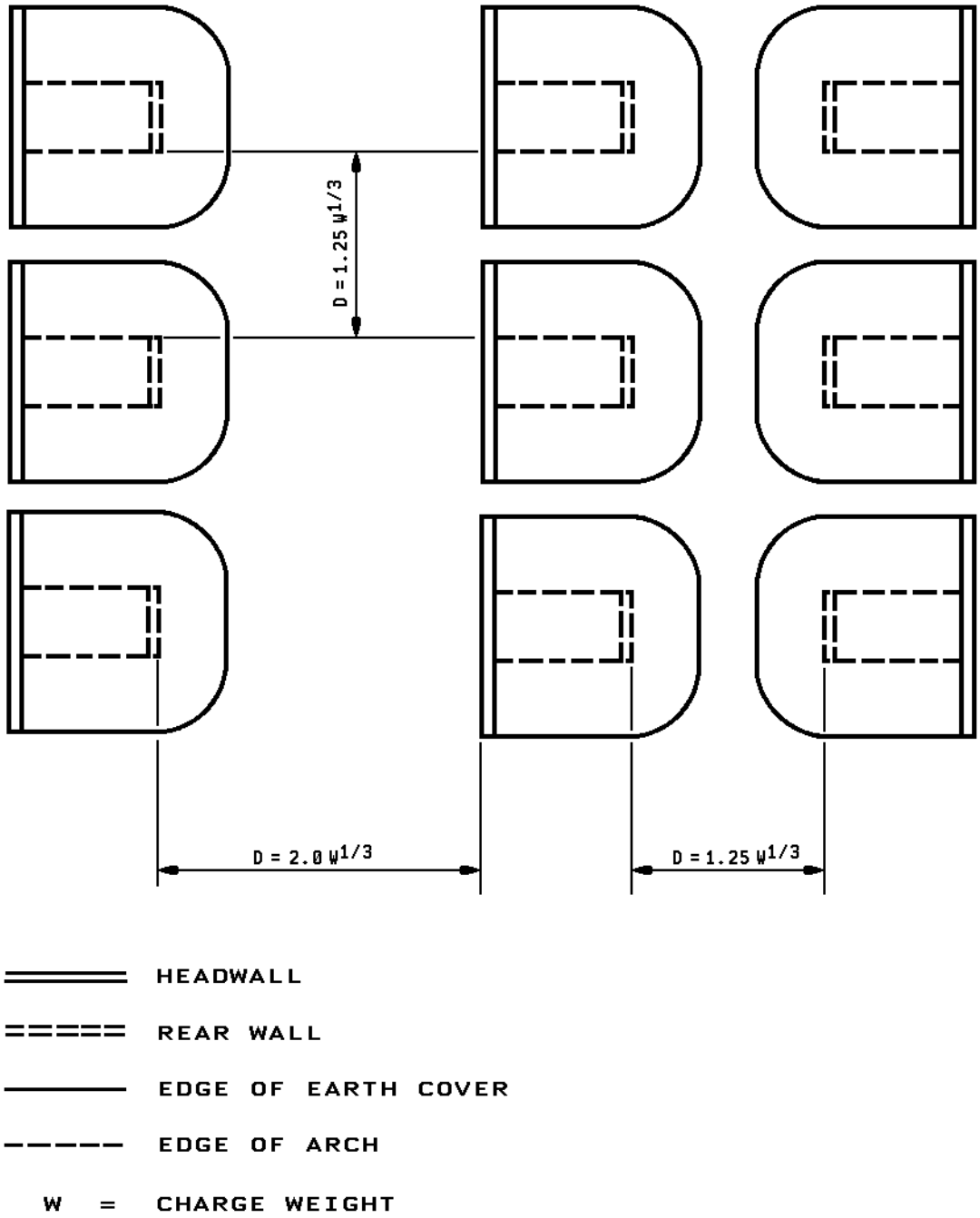

BLAST VALVES

6-43 GENERAL.

6-43.1 Applications.

A prime concern of blast resistant structures is to restrict the flow of high pressures into or out of a structure. For donor structures pressures released may have to be restricted in order to limit pressures acting on adjacent structures to tolerable levels. Also, pressures leaking into acceptor structures must be limited to prevent pressure buildup beyond acceptable levels. In either case openings may have to be completely sealed to prevent the diffusion of contaminants.

The simplest, most economical way of limiting leakage pressure into or out of a protective structure is to restrict the number and size of air intake and exhaust openings. In a donor structure the leakage pressures may be further reduced by venting them through a stack. The stack increases the distance from the point of release of the pressure to the acceptor structure thereby attenuating the blast loading. Methods for predicting the pressures leaking out of a building and the pressure buildup within a building are discussed in Chapter 2. If the leakage pressure cannot be reduced to acceptable levels or if contaminants are released during an explosion, the openings must be sealed with either blast valves or other protective closure device.

Blast valves may be either remote-actuated (closed mechanically by remote sensors) or blast-actuated (closed by the pressure wave itself). Both types can be non-latching or latching. A non-latching valve will open under negative pressures. A latching valve is one that can only be reopened manually. In addition, a blast-actuated valve can be double-acting. A double-acting valve will seal against the positive blast pressure, move in the opposite direction to seal against negative pressures and then reopen when pressures return to normal.

6-43.2 Remote-Actuated Valves.

Remote-actuated valves are dependent on external sensing devices which trigger the closure mechanism and close the valve before arrival of the blast wave. Actuating devices have been developed that are sensitive to the blast pressure of an explosion and react electrically to trigger protective closure systems. Other actuating devices sensitive to flash and thermal radiation are also available. The pressure sensing device is placed on a circumference at a predetermined radius from the valve (closer to ground zero) in order to compensate for time delays of electrical and mechanical control equipment and to permit valve closure before the blast arrives. Thermal sensors are designed to detect the characteristic pulse emitted by an explosion to prevent actuation by other sources such as lightning, fires, etc., which may occur with flash sensors. Remote-actuated valves present problems of protection against multibursts and button-up time for combustion-type equipment installed within the structure. In addition to problems of hardenability of the exposed sensor and suitability for multiburst operation, it is often necessary for sensors to initiate reopening of the valves as soon as

dangerous pressures have subsided. In general, remote-actuated valves cannot close fast enough to be effective during an H.E. explosion.

6-43.3 Blast-Actuated Valves.

Self-acting blast-actuated valves, which close under the action of the blast pressure, overcome some of the disadvantages described above and present other factors to be considered. Since the valves are closed by pressure, they are not dependent upon sensing devices for operation. They can be automatically reopened after passage of the positive phase or latched closed during the negative phase if this is required. Double-acting valves automatically seal the opening during the negative phase. Since blast-actuated valves are closed by the blast, there is an inherent leakage problem to be considered due to the finite closing time. Although this is in the order of milliseconds for most valves, sufficient flow to cause damage may pass the port openings for certain valve designs and pressure levels. Effectiveness of closing at both high- and low-pressure ranges must be checked. The amount of blast entering depends on the closing time of the valve which, in turn, depends on the mass of the moving parts, disk diameter, and the distribution of pressures on both faces of the disk.

Ideally, a blast-actuated valve should possess the following characteristics: instantaneous closure or no leakage beyond the valve during and after closure, no rebound of moving parts, equal efficiency at all pressures below the design pressure, operational and structural reliability, minimum of moving parts, low-pressure drop through the valve at normal ventilation or combustion air flows, multiple detonation capability, durability, and easy maintenance.

Although instantaneous closure is not physically possible, the closing time can be reduced sufficiently to reduce the leakage to insignificant values. This may be accomplished by increasing the activating pressure-force-to-moving-mass ratio, decreasing the length of travel, permitting no deceleration during closure, and other methods.

6-43.4 Plenums.

Blast valves, especially blast-actuated valves, will allow some pressure leakage. While the leakage pressure may not significantly increase the ambient pressure at some distance from the valve, there might be a “jetting effect” causing very high pressures in the immediate vicinity. A plenum may be used to protect against these high pressures. Two examples of plenums are a plenum chamber and a plenum constructed of hardened duct work. A plenum chamber is a room where pressures attenuate by expansion. A hardened duct work plenum reduces the pressures by increasing the distance traveled (similar to the stack discussed in Section 6-43.1). For a donor structure, a plenum would only be necessary if contaminants are released during an explosion and the air must be filtered before being vented to the exterior. In that case, a plenum would be used to lower the pressures and prevent damage to the filters. A plenum in an acceptor structure would be used to prevent high leakage pressures from

directly entering the building's air duct system and possibly causing local failure of the system.

Plenum chambers should be designed to avoid a buildup of interior pressure which would impede closing of the valve. The ratio of the area of the chamber cross section to that of the valve outlet should be preferably greater than 4:1 so as to diffuse leakage flow as quickly as possible. A chamber which has the prescribed necessary volume but has little change in area would act like a tunnel wherein entering pressures would encounter little attenuation in the length provided.

6-43.5 Fragment Protection.

To ensure that blast valves function properly, they must be protected from fragments that may perforate the valves or jam them in an open position. One of several methods of accomplishing the required protection is by offsetting the opening from the blast valve by means of a blast-resistant duct or tunnel which would prevent the propagation of fragments to the blast valve. Another method is to enclose the blast valve in a concrete chimney. Other methods include using a debris pit or steel shields or debris cover attached directly to the blast valves.

6-44 TYPES OF BLAST VALVES.

6-44.1 General.

Various types of blast valves have been developed and many of them are available commercially from suppliers both here and overseas (see Table 6-14 (+)). For present designs, air flow rates from about 300 cfm to 35,000 cfm can be obtained. Some valve designs are available in more than one size and can be either blast or remote-actuated. The pressure loss across the valve at the rated air flow is, in most cases, less than one inch of water.

The maximum incident pressure capability of available valves is above 50 psi and generally at least 100 psi. For shelter purposes, these valves may be overdesigned since the protection level for many shelters will be less than 50 psi. Except for cost factors, using a 100-psi valve for a 10-psi shelter design should not necessarily present technical problems since a valve must operate at all pressures below the maximum design level.

The best type of actuation (blast or remote) depends partly on the design pressure as previously discussed with regard to reaction time and operational considerations. For long arrival times (low pressure) a remote-actuated device can close the valve before the blast arrival whereas leakage may occur for a blast-actuated valve. At a high pressure (short arrival time), the closing time for the remote-actuated valve may be longer than the arrival time.

6-44.2 Blast Shield.

If it can be assumed that the ventilation system can be closed off during a hazardous operation and kept closed until there is no danger of further blast, a relatively simple structural closure (blast shield), such as a steel plate can be utilized. This type of closure is especially useful for an exterior opening which would only be opened periodically, such as maintenance facilities where the release of toxic fumes from within the structure is required.

6-44.3 Sand Filter.

In shelters where normal operational air requirements are small, sand filters are useful in the attenuation of leakage pressures. With this type of filter the pressures continue to increase throughout the positive phase. Thus this filter is good only for loads with a relatively short duration. A sketch of a 300-cfm sand filter is shown in Figure 6-62 (+).

6-44.4 Blast Resistant Louvers.

The blast resistant louver shown in Figure 6-63 (+) is blast actuated and has a rated flow of 600 cfm at less than 1 inch water (gage) pressure drop. If a larger volume of air is required the louvers can be set into a frame and used in series (see Figure 6-64 (+)). Louvers can be used in acceptor structures subject up to 50 psi. A major drawback of the louvers is that there may be as much as 40 percent leakage across the valve, especially at lower pressures.

6-44.5 Poppet Valves.

6-44.5.1 Applications.

A poppet valve has many advantages. It has few moving parts which might need repair. It can be blast or remote-actuated, latching, non-latching, or double-acting and is available in sizes from 600 to 5,000 cfm. A blast-actuated poppet valve has a very fast closing time, approximately 20 milliseconds, making it the only valve that reacts fast enough to be used in a containment cell.

A typical blast-actuated poppet valve is shown in Figure 6-65 (+). The valve consists of an actuating plate, a valve seat, a backing plate that supports the actuating plate, and a spring which holds the valve open during normal operations. The normal air flow is around the actuating plate. A blast load will compress the spring and move the actuating plate against the valve seat thereby sealing the opening. As the blast pressure moves the actuating plate, some pressure will flow around the plate while it is closing.

The leakage pressures can be completely prevented by using a valve similar to the one schematically illustrated in Figure 6-66 (+). In this valve the normal air flow is around the actuating plate through a length of duct. When the valve is subjected to a blast load, the pressure starts moving the actuating plate while at the same time flowing through the duct. The length of the duct must be long enough to ensure that the time it takes the blast pressures to flow through the duct (delay path) will be longer than the time

required for the actuating plate to seal the valve. As an alternate to the long duct, an expansion chamber may be used to delay the blast.

6-44.5.2 Recommended Specification for Poppet Valves.

Presented below is an example specification for the design, testing and construction of a poppet valve, but it may be adapted for other types of blast valves. This example specification is presented using the Construction Specification Institute (CSI) format and shall contain as a minimum the following:

1. APPLICABLE PUBLICATIONS: Except as otherwise stated herein all materials and work furnished in accordance with this specification shall comply with the following codes and standards.

   1.1 Federal Specification (Fed. Spec.)

   TT-P-37D Paint, Alkyd Resin; Exterior Trim, Deep Colors

   TT-P-645A Primer, Paint Zinc Chromate Alkyd Type

   TT-P-86G Paint, Red- Lead-Base, Ready Mixed

   1.2 American Society for Testing and Materials (ASTM)

   A 53-81a Pipe, Steel Black, and Hot-Dipped, Zinc-Coated, Welded and Seamless

   D 2000-80 Rubber Products in Automotive Applications, Classification System For

   E-709-80 Magnetic Particle Examination

   1.3 American Institute of Steel Construction (AISC)

   Specification for the Design, Fabrication and Erection of Structural Steel for Buildings (Eighth Edition) with commentary

   1.4 American Iron and Steel Institute (AISI)

   304 17-7th

   1.5 American Welding Society (AWS)

   D.1.1 Structural Welding Code (latest edition)

2. SUBMITTALS: The following information shall be submitted for approval. Materials shall not be delivered to the site until approved shop drawings have been returned to the Contractor. Partial submittals, or submittals for less than the whole of any system made up of interdependent components will not be accepted. Submittals for manufactured items shall be manufacturer's descriptive literature, shop drawings, and catalog cuts that

include the manufacturer's dimensions, capacity, specification reference, and all other information necessary to establish contract compliance.

2.1 Qualifications: The Contractor shall submit for approval, data to support the qualifications of the manufacturer and installer. A list of previously successfully completed jobs of a similar nature, indicating the name and address of the owner of the installation shall be included with the information.

2.2 Manufacturer's Data: Before executing any fabrication work, a completely marked and coordinated package of documents sufficient to assure full compliance with the drawings and specifications shall be submitted. The submittal shall include a complete technical evaluation of the capacity of each valve as described below. The drawings shall include: detailed fabrication and equipment drawings; assembly showing the complete installation, including methods for supporting the valves, subframes and frames; a listing of all materials and material specifications; surface finishes; fabrication, assembly and installation tolerances; locking devices and locking device release mechanisms; and a detailed sequence for installation of valves and frames in conjunction with other phases of construction. Structural fabrication drawings shall conform to the requirements of AISC and welding shall conform to AWS. Assembly and installation shall be based on field established conditions and shall be fully coordinated with architectural, structural, and mechanical systems. All aspects of any work developed in connection with the development of these valves shall be fully documented and become the property of the Government.

2.2.1 Standard Compliance: Where equipment or materials are specified to conform to requirements of the standards of organizations such as ANSI, NFPA, UL, etc., which use a label or listing as a method of indicating compliance, proof of such conformance shall be submitted for approval. The label or listing of the specified organization will be acceptable evidence. In lieu of the label or listing, the Contractor shall submit a notarized certificate from a nationally recognized testing organization adequately equipped and competent to perform such services, and approved by the Contracting Officer stating that the items have been tested with the specified organization's methods and that the item conforms to the specified organization's standards.

2.3 Preliminary Hydraulic Characteristics: Prior to Construction, submit with shop drawings an estimate of the hydraulic characteristics of

each valve, under actual operating conditions. Ratings shall be based on tests or test data. All necessary corrections and adjustments shall be clearly identified. Corrections shall be established for actual altitude and air flow directions as shown on the drawings as well as hydraulic effects produced by mounting and/or connection of the valve.

2.4 Tests and Test Reports: Except as noted otherwise, the testing requirements for materials stated herein or incorporated in referenced documents, will be waived, provided certified copies of reports of tests from approved laboratories performed on previously manufactured materials are submitted and approved. Test reports shall be accompanied by notarized certificates from the manufacturer certifying that the previously tested material is of the same type, quality and manufacture as that furnished for this project.

2.5 Blast pressure analysis calculations and/or results of approved tests shall be submitted, for both the blast valve and subframe, for approval and shall conform to the requirement of the paragraph entitled, BLAST VALVE TESTS. The calculations and/or test results shall include all components of the valves and subframe subjected to the blast pressures. Calculations are not required for the frame embedded in the concrete. This frame shall conform to that shown on the drawings. However, the fabrications of the blast valve and associated subframe and embedded frame shall be the responsibility of the blast valve manufacturer. This manufacturer shall also be responsible for installation of this equipment.

2.6 Qualification of Welders: Before assigning any welder to work covered by this section of the specification, the Contractor shall submit the names of the welders to be employed on the work together with certification that each of these welders has passed the qualification test using procedures covered in AWS Standard D1.1.

2.7 Operational and Maintenance Manual: Operation and maintenance manuals shall be furnished by the Contractor. Complete manuals shall be furnished prior to the time of installation. The manual shall have a table of contents and shall be assembled to conform to the table of contents with tab sheets placed before instructions covering the subject.

2.8 Shop Test Reports: The Contractor shall furnish copies of shop inspection and test results of fabrication welding.

3. MATERIALS:

3.1 Structural steel pipe used for blast valve construction shall conform to ASTM A 53 seamless pipe.

3.2 All structural steel plate components of the valve shall consist of stainless steel and shall conform to AISI 304.

3.3 Spring type components shall consist of stainless steel and conform to AISI 17-7th, Condition C.

3.4 Blast Seal Material: Seals for blast valves shall conform to ASTM D 2000.

4. BLAST VALVE REQUIREMENTS: All blast valves shall be poppet type and shall have the following characteristics.

4.1 Pressure capacity: Each valve shall be capable of withstanding a sustained blast pressure of 100 psi as well as the impact force produced by the closing of the valve. The valve shall be designed to sustain elastic deformation when subjected to the above loads. The blast valve shall be capable of closing under a force of 15 pounds.

4.2 Temperature Capacity: Each valve shall be capable of satisfactory operation over a temperature range of 35° to 300°F.

4.3 Valve Actuation: Each valve shall be actuated by the blast overpressure. The valve shall be in the closed position 20 milliseconds after the onset of the blast front. The blast pressures are given on the drawings.

4.4 Valve Parameters: A minimum of 12-inch diameter blast valve shall be used. After the valve is closed by the blast overpressure, it shall remain in the closed position until manually opened. This shall require that the valve be equipped with a locking device which shall be located at the exterior side of the valve. A release mechanism for the locking devices shall be provided which shall be operated from a position immediately adjacent to the interior of the valve. Any penetration through the valve or the structure must be capable of being sealed against blast leakage through the penetration. The air flow capacity of the valves shall be 1500 SCFM (1710 ACFM) for the supply and return valves and 880 SCFM (1000 ACFM) for the exhaust valve. Total actual pressure drop across the valve with air movement in either direction shall not exceed one inch of water (gage). The valve and its operating parts shall be designed for a 20-year life and shall have an operating frequency of 10,000.

4.5 Blast Seals: Blast seals shall be provided between the face of each valve and subframe and between the subframe and the frame to provide a pressure tight condition. Seals shall be adjustable and easily replaceable. The seal shall be designed to be leakproof with a pressure differential across the seal of 100 psi.

4.5.1 Blast Seal Material: Seal material shall conform to ASTM D 2000. Four sets of blast seals shall be furnished with each valve. Three sets of the seals shall be packaged for long term storage.

4.5.2 Adhesive: Adhesive for blast seals shall be as recommended by the manufacturer of the seals. Sufficient adhesive shall be provided for installation of the packaged seals at a later date.

4.6 Field Removal: Blast valves shall have the capabilities of being completely field removed and disassembled.

5. FABRICATION:

5.1 Qualification of Manufacturer: The manufacture and installation of blast valves and frames shall be performed by the blast valve manufacturer who shall be fully responsible for valve operation. The manufacturer shall have complete facilities, equipment and technical personnel for the design, fabrication, installation and testing of complete blast valve assemblies.

5.2 General: The drawings indicate the location of the blast valves in the structure. The manufacturer shall carefully investigate the drawings and finished conditions affecting his work and shall design the units to meet the job condition and the dynamic loads. The blast valves shall be complete with gaskets, fasteners, anchors, mechanical operators, and all other equipment and accessories as required for complete installation.

5.3 Metalwork: Except as modified herein, fabrication shall be at a minimum, in accordance with the AISC Specification for the Design, Fabrication and Erection of Structural Steel for Buildings. Welding of steel shall be in accordance with the requirements for AWS Specification D1.1. A welding sequence to reduce distortion and locked-up stresses to a minimum shall be used. All welded units shall be stress relieved. All welded members shall be post weld straightened free of twist and wind. Fabricated steel shall be well formed to shape and size, with sharp lines and angles. Exposed welds shall be ground smooth. Exposed surface of work, in place, shall have a smooth finish. Where tight fits are required joints shall be milled to a close fit. Corner joint shall be coped or mitered, well

formed, and in true alignment. Permanent connections for all assemblies and components, except those requiring removal for installation and maintenance, shall be welded. Each valve and subframe shall be removable from the embedded frame.

5.3.1 Machining: Parts and assemblies shall be machine finished wherever necessary to insure proper fit of the parts and the satisfactory performance of the valves.

5.3.2 Weld Details: The types of edge preparation used for welds shall be chosen by the manufacturer to be the most suitable for the joint and position of welding. Where required, all groove welds shall be complete penetration welds with complete joint fusion. Groove weld edge preparations shall be accurately and neatly made. All full penetration groove joints shall be back-chipped and back welded where both sides are accessible. Where both sides are not accessible, backing strips not exposed to view may be left in place unless removal is required for clearance. Backing strip not removed shall be made continuous by welding ends and junctions.

5.3.3 Weld Tests: Inspection and tests of welds shall be as specified in AWS Specification D1.1. All welding shall be subjected to normal continuous inspection.

5.3.3.1 Nondestructive dye penetrator testing shall be performed for all welding in accordance with Method B of ASTM E 165 or ASTM E 709. Allowable defects shall conform to AWS Specification D1.1.

5.3.3.2 Penetration Welds: All full or partial penetration corners, tees and inaccessible butt joints shall be subjected to 100 percent ultrasonic examination. All penetration joints shall be considered to be tension joints. All tests shall be performed by a testing laboratory approved by the Contracting Officer. The testing laboratory shall be responsible for interpretation of the testing, which shall be certified and submitted in a written report for each test. In addition to the weld examination performed by the Contractor, the Contracting Officer reserves the right to perform independent examination of any welds at any time. The cost of all Government reexamination will be borne by the Government.

5.3.3.3 Correction of Defective Welds: Welds containing defects exceeding the allowable which have been revealed by the above testing shall be chipped or ground out for full depth and rewelded. This correction of the defected weld area and retest shall be at the Contractor's expense.

5.4 Metal Cleaning and Painting:

5.4.1 Cleaning: Except as modified herein, surfaces shall be cleaned to bare metal by an approved blasting process. Any surface that may be damaged by blasting shall be cleaned to bare metal by powered wire brushing or other mechanical means. Cleaned surfaces which become contaminated with rust, dirt, oil, grease, or other contaminants shall be washed with solvents until thoroughly clean.

5.4.2 Pretreatment: Except as modified herein, immediately after cleaning, steel surfaces shall be given a crystalline phosphate base coating; the phosphate base coating shall be applied only to blast cleaned, bare metal surfaces.

5.4.3 Priming: Treated surfaces shall be primed as soon as practicable after the pretreatment coating has dried. Except as modified herein, the primer shall be a coat of zinc chromate primer conforming to Fed. Spec. TT-P-645, or a coat of red lead paint, Type I or Type III conforming to Fed. Spec. TT-P-86G, applied to a minimum dry film thickness of 1.0 mil. Surfaces that will be concealed after construction and will require no overpainting for appearance may be primed with a coat of asphalt varnish, applied to a minimum dry film thickness of 1.0 mil. Damage to primed surfaces shall be repaired with the primer.

5.4.4 Painting: Shop painting shall be provided for all metalwork, except for non-ferrous metals and corrosion resistant metals and surfaces to be embedded in concrete. Surfaces to be welded shall not be coated within three inches of the weld, prior to welding. All machined surfaces in contact with outer surfaces and bearing surfaces shall not be painted. These surfaces shall be corrosion protected by the application of a corrosion preventive compound. Surfaces to receive adhesives for gaskets shall not be painted. Surfaces shall be thoroughly dry and clean when the paint is applied. No painting shall be done in freezing or wet weather except under cover; the temperature shall be above 45° F but not

over 90° F. Paint shall be applied in a workmanlike manner and all joints and crevices shall be coated thoroughly. Surfaces which will be concealed or inaccessible after assembly shall be painted prior to assembly. Paint shall conform to Fed. Spec. TT-P37D.

6. BLAST VALVE TESTS:

6.1 Response Tests: The following static and dynamic response shall be performed to demonstrate the blast resistant capabilities of the blast value design. These tests shall be witnessed by the Contracting Officer.

6.1.1 Closure Time Test: Prior to shipment to the site, the Contractor shall perform a test to demonstrate that the closure of the blast valve will not exceed the 20 milliseconds specified. A suggested method for recording the valve closure is with the use of a high speed camera.

6.1.2 Static Pressure Test: Prior to shipment to the site, the Contractor shall perform a pneumatic test to demonstrate the static capacity of the blast valve design. The valve must sustain the pressure of 100 psi for a minimum of two hours. The total pressure loss during that period shall not exceed 1 psi.

6.1.3 Dynamic Pressure Test: Prior to shipment to the site, the Contractor shall perform a test to demonstrate the dynamic capacity of the blast valve design. This test shall simulate the combined effects of impact forces produced by the valve closure system and the blast load. This test may be replaced by design analyses which demonstrate that the head and frame of the valve shall have the capability to resist the stresses produced by the above forces. The blast load as indicated on the drawings shall be used for this analysis.

6.1.4 Blast Tests: If the effects of one or more of the above blast valve tests have been demonstrated by prior blast valve tests on similar valves, then the results of these tests shall be submitted for review; and the above test performances may not be required.

6.2 Test: After installation, a trip test shall be performed and demonstrated to the operating personnel.

6.3 Hydraulic Characteristics: Prior to shipment to the site, the Contractor shall perform a final test to establish the hydraulic

characteristics of each valve and provide the necessary corrections and adjustments as stated previously.

Figure 6-62 Sketch of 300 cfm Sand Filter

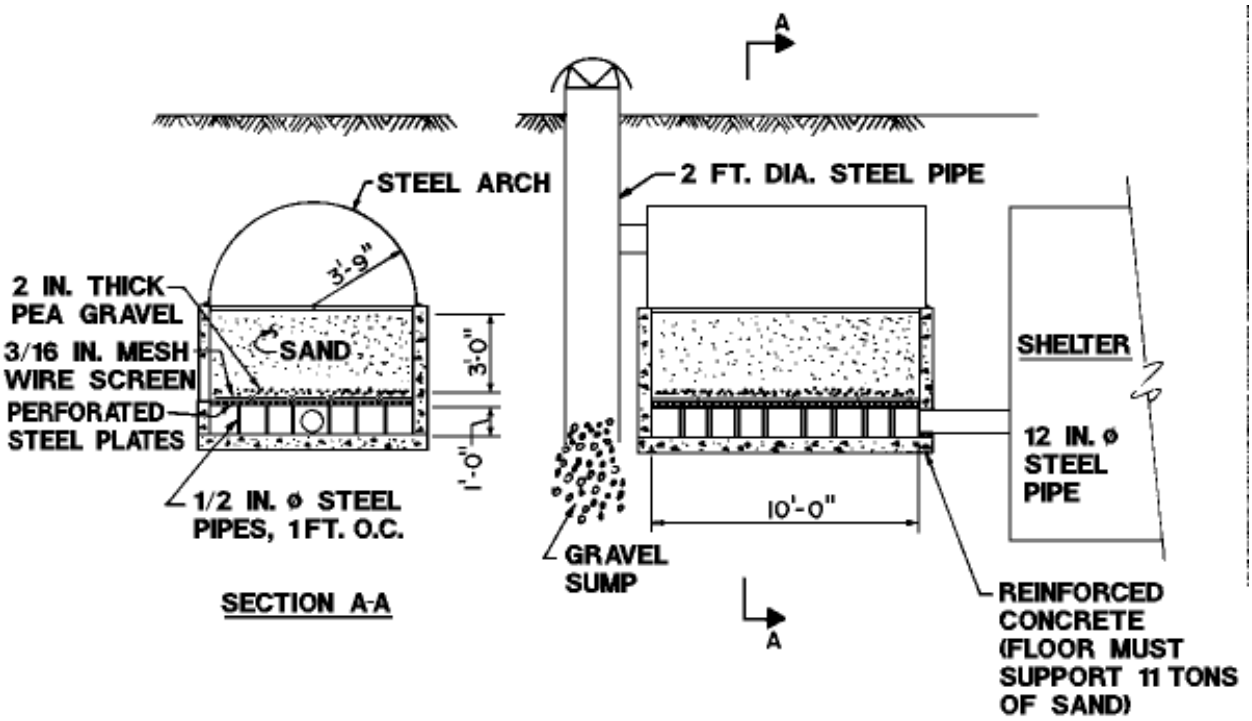

Figure 6-63 Blast-Actuated Louver

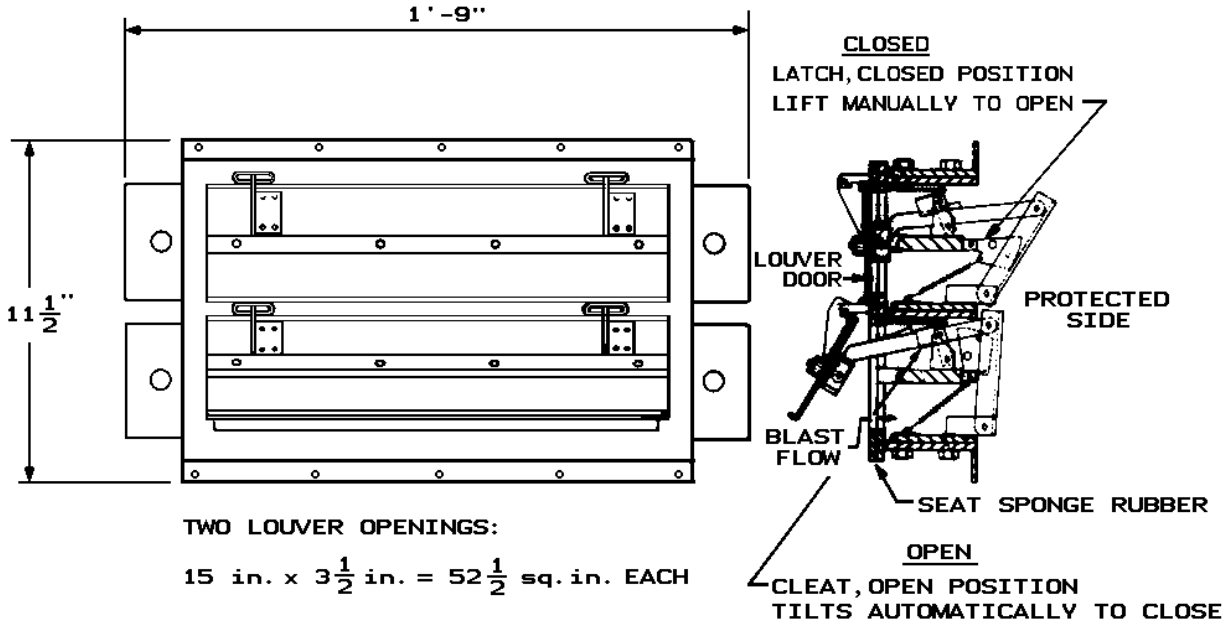

Figure 6-64 Arrangement of Multiple Louvers for a Large Volume of Air

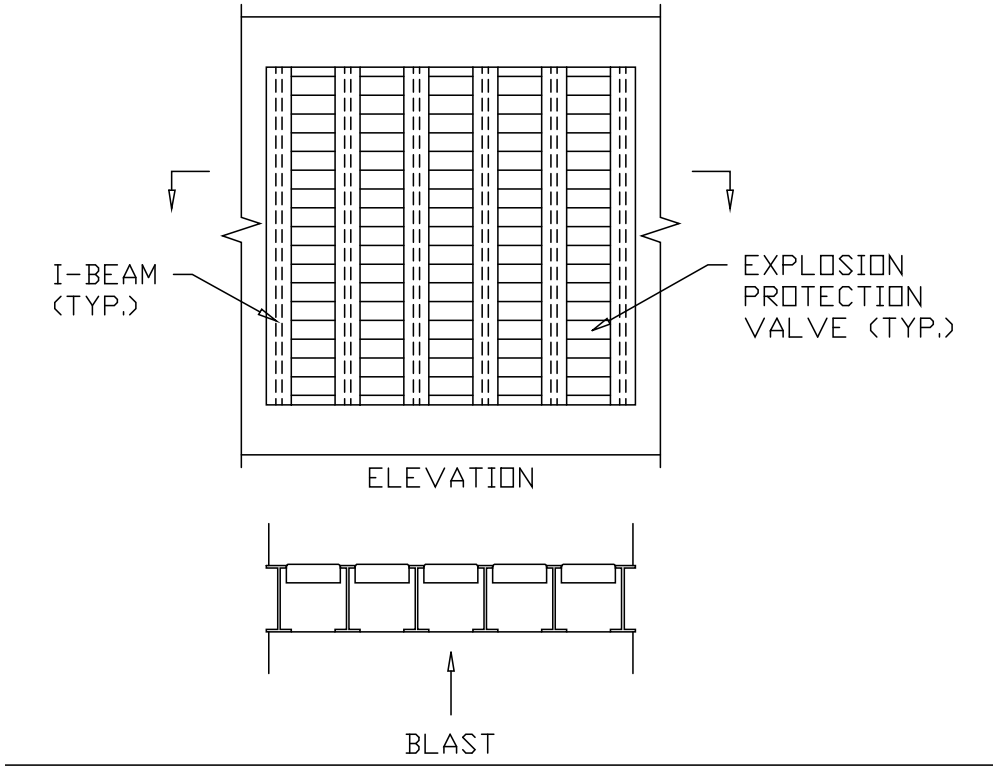

Figure 6-65 Typical Blast-Actuated Poppet Value

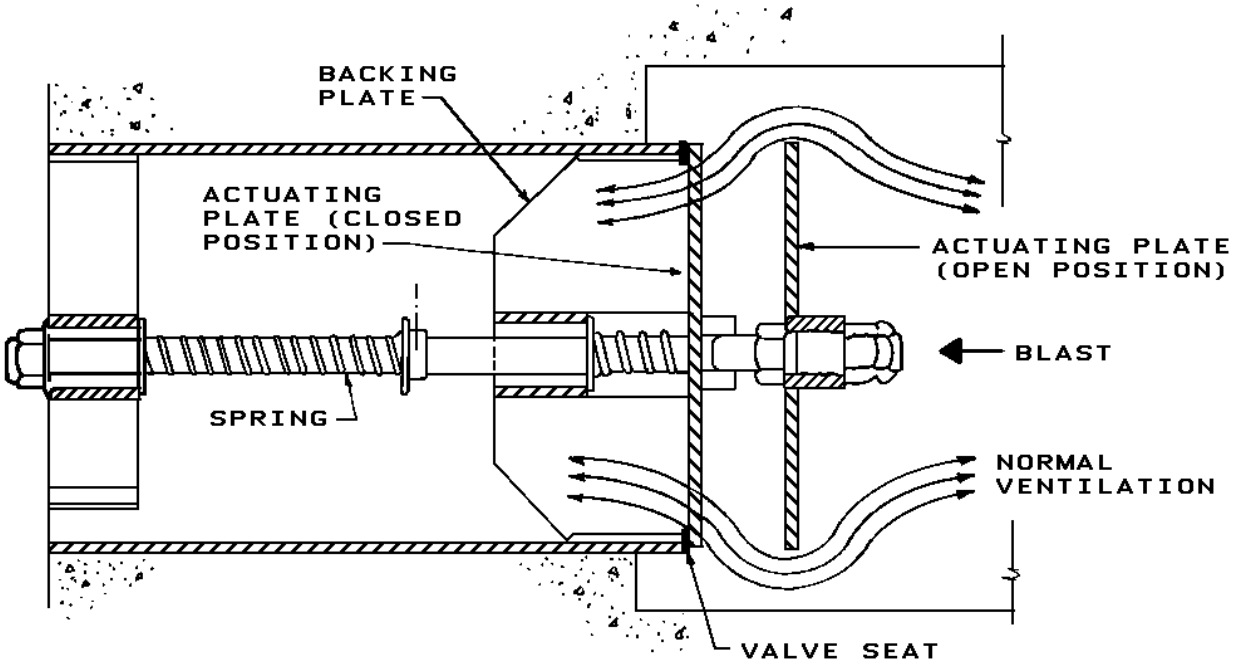

Figure 6-66 Time Delay Path

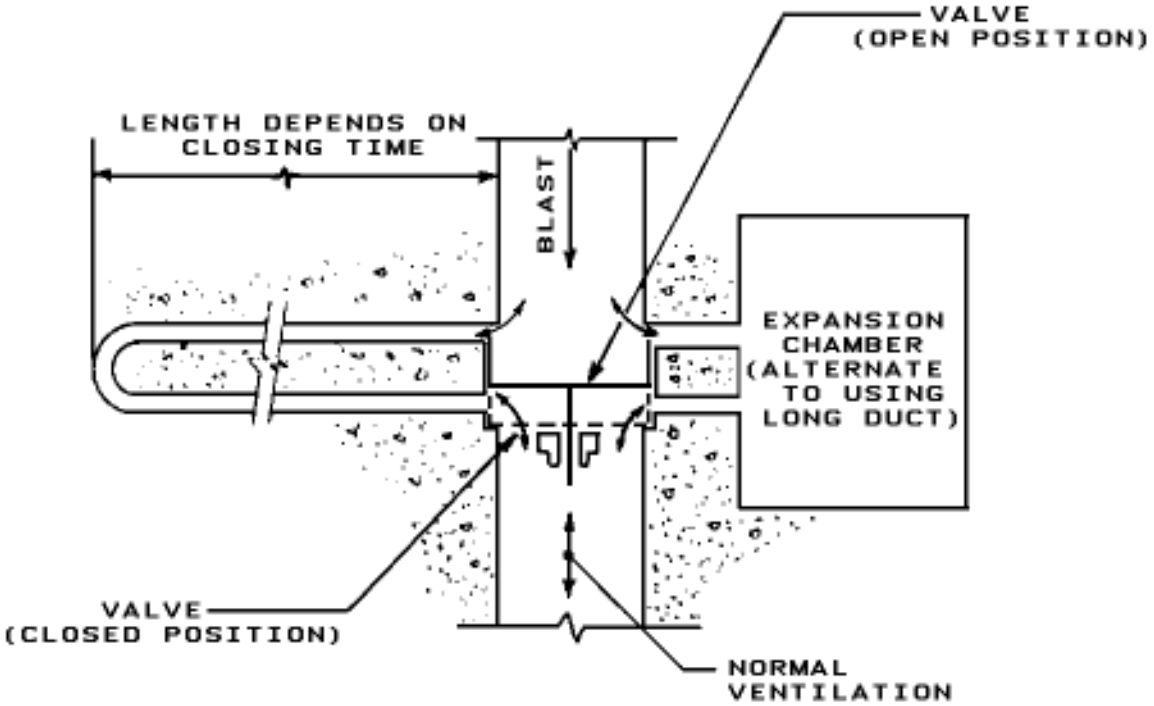

Figure 6-67 Idealized Model of Shock Isolated Mass

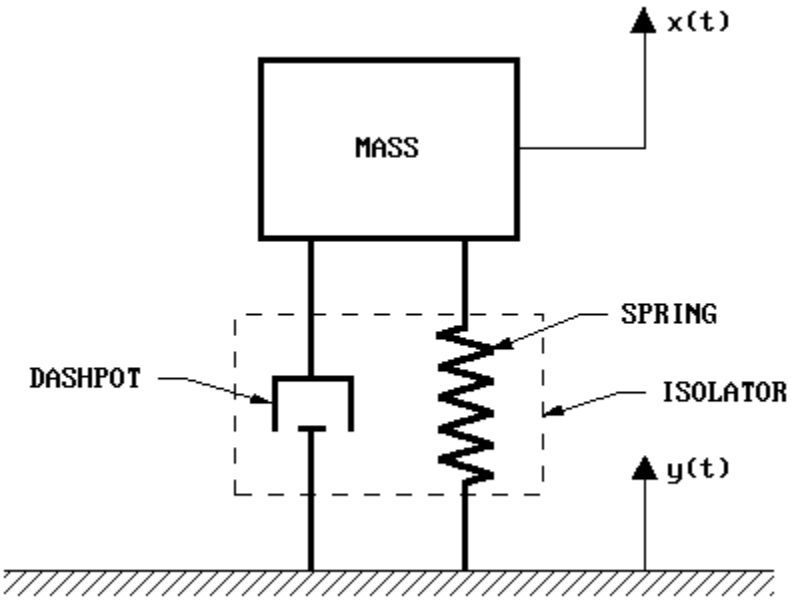

Table 6-14 Blast Valves

Name of Valve		Type (Actuated)	Blast Characteristics		Locking Mechanism	Air Flow Rates (cfm)	Tested
			Pressure (psi)	Closing Time (ms)			
U.S. Army Chemical Corps M-1		Blast	100	*	Yes	300	Field
U.S. Army Chemical Corps E191R1		Blast	50	*	Yes	600	Shock tube and field
Office of Civil Defense	12”0 16”0 24”0	Blast and Remote	100 50 50	* 50 *	Yes Yes Yes	600 1,200 2,500	Field
Office of Corps of Engineers		Blast and Remote	*	20	Yes	5,000	Shock tube
Bureau of Yards and Docks		Remote	*	500	Yes	2,200 to 30,000	*
Temet USA, Inc.		Blast	100	20	Yes	2,250 to 3,700	Shock tube
Jaern and Platt	4”0 8”0 14”0		280	*		150 600 1,750	Field
Technical Facilities WS-107 A2		Remote	*	*		35,000	*
American Machine Foundry		Blast	100	*	Yes	80	*
Luwa		Blast	15 to 160	2	No	450	Shock tube
Suffield Experimental Stations		Blast	4 to 20	*		*	*
New Naval Civil Engineering Lab	Brechenridge Bayles-Denny Stephenson	Blast	100 5 to 100 5 to 104	* * *	No No No	600 180 125	Compressed Air
Artes Machinery (Sand Filtered)		Blast	100	*	No	300	Field

* Unknown

SHOCK ISOLATION SYSTEMS

6-45 INTRODUCTION.

Previous sections have presented methods for the prediction of blast and fragment effects associated with the detonation of explosives and the design or analysis of structures to withstand these effects. In the design of shelters, an important part of the design process is to insure the survival of personnel and equipment. It is possible that the structure could withstand the air blast and ground shock effects but the contents be so severely damaged by structure motions that the facility could not accomplish its intended function. A similar problem is in the design of shelter type structures that houses sensitive explosives. These explosives must be protected from structure motions since these motions could result in initiation of the explosive. This section deals with the protection of vulnerable components from structure motions due to air blast and ground shock.

6-46 OBJECTIVES.

The objective of shock isolation in protective design applications is to reduce the magnitude of motions transmitted by a vibrating structure to personnel or shock sensitive equipment. These motions must be attenuated to levels tolerable to personnel and to be various pieces of equipment used in the facility. A second consideration in some cases is to reduce the magnitude of motions transmitted by vibrating equipment to its supports. These latter motions can be significant for equipment mounted on shock isolated platforms.

The general functional objectives of a shock isolation system are:

1. Reduce input motions to acceptable levels.
2. Minimize rattle space requirements consistent with system effectiveness and cost.
3. Minimize coupling of horizontal and vertical motions.
4. Accommodate a spectrum of inputs of uncertain waveforms.
5. Limit the number of cycles of motion of the isolated body.
6. Support the system under normal operating conditions without objectionable motions.
7. Maintain constant attitude under normal operating conditions.
8. Accommodate changes in load and load distribution.
9. Maintain system vibration characteristics over long periods of time.
10. Interface properly with other components or parts.

11. Require minimum maintenance

6-47 STRUCTURE MOTIONS.

Ground shock results from the energy which is imparted to the ground by an explosion. Some of this energy is transmitted through the air in the form of air-blast-induced ground shock and some is transmitted through the ground as direct-induced ground shock. Both of these forms of ground shock when imparted to a structure will cause the structure to move in both a vertical and horizontal direction. Movement of the structure imparts motions to items attached to the structure's interior. Motion of interior items is obtained from a response spectrum. This is a plot giving the maximum responses (in terms of displacement, velocity, and acceleration) of all possible linear single-degree-of-freedom systems which may be attached to the structure due to a given input motion. Therefore, having the spectra for the structure and given input motion, the maximum response of any item within the structure is obtained based on the natural frequency of the item. Methods for preparing response shock spectra are presented in Chapter 2 of this manual.

In addition to motion of the structure as a whole, the exterior walls and roof respond to the direct application of the blast load. Methods for calculating the response of these elements are given in Chapter 3 of this manual using the parameters given in Chapter 4 and 5 for concrete and steel, respectively. Maximum displacements, velocities, and accelerations of these elements can be determined in a straightforward manner. These quantities can be used to determine effects on items attached or located near walls or roofs.

6-48 SHOCK TOLERANCE OF PERSONNEL AND EQUIPMENT.

The requirement for shock isolation is based upon the shock tolerance of personnel and/or critical items of equipment contained within the protective structure. If the predicted shock input exceeds the shock tolerance of personnel, a shock isolation system is required. If the shock input exceeds the shock tolerance of equipment, the equipment can either be ruggedized to increase its shock tolerance or it can be shock isolated. There are practical limits to ruggedization and the costs may exceed those of an isolation system. If the input does not exceed the shock tolerance of the equipment, it can be hard-mounted to the structure.

6-48.1 Personnel.

The effects of structural motions on personnel depend on the magnitude, duration, frequency, and direction of the motion, as well as their position at the time of the loading. The shock tolerance of personnel is presented in Chapter 1 of this manual.

6-48.2 Equipment.

In many cases, the need for shock isolation of equipment must be established before detailed characteristics of the system components are established. Further, because of the constraints of procurement procedures, shock isolation systems must be designed

and built prior to specific knowledge of the equipment to be installed. In such instances, the choice lies between specifying minimum acceptable shock tolerances for the new equipment or using whatever data is available for similar types of equipment.

The most practical means of determining the shock tolerance of a particular item of equipment is by testing. However, even experimental data can be of questionable value if the test input motion characteristics differ greatly from those that would actually be experienced by the equipment. Since testing of equipment may not be practical in many cases due to the amount of time allotted from the inception of a project to its completion, procurement procedures, and cost limitations, it is often necessary to rely on data obtained from shock tests of similar items. The shock capacity of various types of equipment is presented in Chapter 1 of this manual.

6-49 SHOCK ISOLATION PRINCIPLES.

6-49.1 General Concepts.

A full treatment of the problem of shock isolation systems is not possible in this manual. The following discussion provides an introduction to the subject and presents some of the important characteristics of shock isolation systems.

In general, the analytical treatment of shock isolation systems is based upon the principles of dynamic analysis presented in Chapter 3. In most cases, the actual system can be represented by a simplified mathematical model consisting of a rigid mass connected by a spring and dash pot as shown in Figure 6-67 (+). The figure represents the simplest case, that of a single-degree-of-freedom system restrained to move in only one direction. Actually, an isolation system would have at least six degrees of freedom, i.e., three displacements and three rotations. Under certain conditions, these six modes can be uncoupled and the system analyzed as six single-degree-of-freedom systems.

The single-degree-of-freedom system shown in Figure 6-67 (+) can be used to illustrate the importance of some of the parameters affecting the effectiveness of shock isolation systems in general. The isolator is represented by the linear spring and viscous damping device enclosed within the dotted square. The suspended mass is taken to be a rigid body. It is assumed that the base of the system is subjected to a periodic sinusoidal motion whose frequency is *f*. The undamped natural frequency of the system is f_n and is given by:

$$f_n = \frac{1}{2\pi}\left[\frac{386.4K}{W}\right]^{1/2} \qquad 6\text{-}56$$

where

f_n = *natural frequency of vibration*
K = *unit stiffness of spring*

W = weight supported by spring

When the frequency of the disturbing motion *f* is small compared to the natural frequency f_n of the single-degree-of-freedom system, the displacement of the mass is approximately equal to the displacement of the base. When the frequency of the base motion is several times that of the system, the motion of the mass is a small fraction of the base motion. When the ratio of frequencies become large (20 to 30), the system cannot respond to the base motion to any significant degree. At frequency ratios near one, large motions of the mass are possible and the magnitude is strongly affected by the amount of damping in the system.

One obvious shock isolation approach is to use a low frequency suspension system so that the ratio of frequencies is always large. However, low frequency (referred to as soft) systems possess the undesirable characteristic of larger static and dynamic displacements and greater probability of coupling between modes of vibration. Although soft systems may be acceptable under some conditions, the obvious constraint that will preclude their use is a limit on the relative motion between the suspended mass and its supports or adjacent parts of the facility. This relative motion determines the amount of rattle space that must be provided to avoid impact between the mass and other fixed or moving parts of the facility.

The acceleration of the mass is a function of the forces applied to the mass by the spring and damping devices. In the case of a linear undamped spring, the force is a function of the relative displacement between the mass and its support. In viscous damping devices, the damping force is a function of the percent damping and the relative velocity between the mass and its supports. Acceleration limits for the critical items will impose restraints on spring stiffness and the amount of damping in the isolation system. In practice, a compromise combination of spring stiffness and damping is necessary to minimize input motions to the mass for a specified allowable rattle space or to minimize the rattle space required for specified allowable motions of the mass.

The need to avoid resonance (ratio of the frequency of the base motion to the natural frequency of the isolation system equal to one) is obvious. The structural motions resulting from an explosion are not steady-state sinusoidal in nature. However, these motions are of an oscillatory type and the displacement-frequency relationships discussed above are applicable.

A more detailed discussion of the effects of load duration, nonlinear springs, damping, and system frequency on response can be obtained from publications listed in the bibliography.

The basic objective in shock isolation is to select a combination of isolation system properties which will reduce the input motions to the desired level. In design, it is a straightforward process. System properties are assumed and an analysis is performed to determine its response to the input motions. If the shock tolerance and rattle space

criteria are not satisfied, the system must be altered and the analysis repeated until the criteria are satisfied.

6-49.2 Single-Mass Dynamic Systems.

A single mass system can have six degrees of freedom, that is, translation in three orthogonal axes and three rotations. The system can also be classified as coupled or uncoupled.

A coupled system is one in which forces or displacements in one mode will affect or cause a response in another mode. For example, a vertical displacement of a single rigid mass might also cause rotation of the mass. An uncoupled system, on the other hand, is one where forces or displacements in one mode do not generate a response in another mode. If the system is completely uncoupled, base translations in any one of the three orthogonal directions will cause translations of the mass in that direction only. Similarly, a pure rotation of the base about any one of the three orthogonal principal inertia axes with their origin through the mass center, will cause only pure rotations of the body about that axis. The principal inertia axes are those about which the products of inertia vanish. The principal elastic axes of a resilient element (isolator) are those axes for which an unconstrained element will experience a displacement collinear with the direction of the applied force. If the principal elastic axes and the principal inertia axes of the shock isolation system coincide with the origin or point of intersection of both sets of axes at the center of gravity of the mass, the modes of vibration are uncoupled. Such a system is also referred to as a balanced system.

In Figure 6-68 (+), if all the springs have the same elastic stiffness, the elastic center will be located at point A, which, in this case, is at the center of the individual springs. If the suspended mass is of uniform density, its center of gravity is also located at A, and the system is uncoupled for motion input through the springs. Some systems may be uncoupled only for motions in a particular direction. If point B in Figure 6-68 is the center of gravity of the mass, a horizontal motion in the direction parallel to the *x*-axis of the structure would cause only a horizontal motion of the mass. A vertical motion of the structure would cause both a vertical and rotational motion of the mass. In this case, the vertical and rotational modes are coupled. If the center of gravity were located at point C, then vertical, horizontal and rotational modes are coupled. If the characteristics of the mass and shock isolation system are such that the modes of vibration can be uncoupled, the system can be analyzed as a series of independent single-degree-of-freedom systems. The response of each of these systems can be determined on the basis of input motions and isolator properties in a direction parallel to or about one of the principal inertia axes. The response in each one of these modes can be summed in various ways to obtain the total response of the system. The sum of the maximum responses would neglect differences in phasing and should represent an upper limit of the actual motions. It is recommended that the square root of the sum of the squares of the maximums (root mean square values) be used to represent a realistic maximum response since it is unlikely that response will occur simultaneously in all modes. Superposition of modal response is appropriate for elastic systems only.

A dynamically balanced shock isolation system offers advantages other than a simplification of the computation effort. A balanced system results in reduced motions during oscillation. As a result of the absence of coupling of modes in a balanced system and the usually small, if any, rotational inputs to the system in protective construction applications, rotational motions of the shock isolated mass will be minimized. This is particularly important for large masses where small angles of rotation can result in large displacements at locations far from the center of gravity.

Because of the advantages of a dynamically balanced system, various approaches are taken to minimize coupling of modes. One criterion is that frequencies in the six modes should be separated sufficiently to avoid resonance between modes. Because of the importance of minimizing rotational modes of response, it is suggested that extremely low stiffnesses in these modes should be avoided. For the analysis of multiple degrees of freedom, single-mass systems where the various modes of response are coupled, the modal method of analysis or numerical integration techniques can be utilized. The modal method of analysis requires solution of simultaneous equations of motion to determine characteristic shapes and frequencies of each mode and is limited to the elastic case. The numerical techniques do not require prediction of mode shapes and frequencies and will handle both elastic and inelastic response. If the dynamic system is also a multiple mass system, the above methods can be utilized to analyze the system. While an in-depth discussion is beyond the scope of this manual, a complete discussion of these methods can be found in publications listed in the bibliography.

6-49.3 Shock Isolation Arrangements.

6-49.3.1 Individual versus Group Mounting.

The two basic approaches to shock isolation in protective construction are to provide individually tailored systems for each component and to group together two or more items on a common platform. In the latter case, the system is selected to satisfy the requirements of the most critical item. In some cases, where the shock tolerance of the various items differs greatly, a combination of the two approaches may be the most effective solution. Although the relative location or size of some items may make individual mounts the more practical approach in certain cases, group mounting will generally be as reliable and the least costly solution.

Where personnel must be protected, a platform is the most practical solution. Except for extremely sensitive equipment, the shock tolerance of the personnel will govern the design of the system. The combination of personnel and equipment on the same platform will permit the personnel to move freely (however cautiously) between items of equipment. Where personnel are not required to be mobile, but rather may be able to remain seated while operating the equipment during hazardous periods, the shock tolerance of the personnel are greatly increased. This increased tolerance will reduce the shock isolation requirements while at the same time affording a higher degree of protection for personnel since they are protected from the unknown consequences of falling.

There are several advantages of group mounted systems. A group mounted system is less sensitive to variations in weights of individual items of equipment because of the larger combined weight of all items and the platform. With a number of items there is a greater flexibility of controlling the center of gravity of the total mass. In fact, ballast may be added to the platform to align the center of gravity with the principal axis to form a balanced system. A group mounted system generally requires less rattle space than several independently mounted items. Also, the interconnections between components is greatly simplified if they are all mounted on a single platform. Finally, an important advantage of group systems is cost. Individual mounts will require a large number of isolator units. Although larger, more costly, units are required for the group mounting system, fewer units are required and the cost per pound of supported load will be much lower.

6-49.3.2 Platform Characteristics.

A platform for group mounted systems offers great flexibility in controlling the center of gravity of the supported masses to produce a balanced system where modes of vibration are uncoupled. Ballast may be securely anchored to the platform at locations which would move the center of gravity of the total mass to coincide with the elastic center of the isolation system. The determination of the weight and location of this ballast can be greatly simplified by uncoupling the effect of adding weight in the x and y directions of the principle elastic axes. This uncoupling can be accomplished by locating the ballast symmetrically about the *x*-axis when moving the location of the center of gravity in the *y* direction. In this manner, the location of the center of gravity may be altered independently about the elastic center in the *x* and *y* directions. If for practical reasons the ballast cannot be located symmetrically about a principle axis, then the two directions must be considered simultaneously.

Providing additional ballast in excess of that required to balance the platform provides for future changes in equipment or the addition of new equipment without actually changing the isolation system. The springs will not require replacement nor will the structural members of the platform need to be increased in size. Additional equipment is placed on the platform and ballast is removed and/or relocated to balance the new equipment arrangement. To provide for future equipment changes, it is suggested that additional ballast equal to 25 percent of the weight of the equipment and the required ballast be distributed on the platform. The location of this ballast must not change the center of gravity of the existing balanced system. If future needs have been established, the platform and isolators would be designed for the future equipment. However, ballast would be provided to compensate for the weight of the future equipment and balance the system for the existing equipment.

The stiffness of the platform must be large enough to insure that the platform and associated group mounted equipment can be treated as a rigid body. This criterion is usually satisfied if the lowest natural frequency of any member of the platform is at least five (5) times the natural frequency of the spring mass system. When large, heavy items of equipment are involved, platforms meeting this stiffness criteria may not be practical.

In such cases, the platform equipment configuration should be treated as a multi-mass system.

6-49.3.3 Isolator Arrangements.

There are many ways to support a shock isolated item. Some desirable features have been discussed previously in connection with dynamically balanced systems. The isolators may be positioned in many ways. The more important factors affecting the selection of an isolator arrangement are:

1. The size, weight, shape and location of the center of gravity of the suspended mass.
2. The direction and magnitude of the input motions.
3. Rotation of the lines of action of the devices should be small over the full range of displacements of the system to avoid system nonlinearities.
4. Coupling of modes should be minimized.
5. Static and dynamic instability must be prevented.
6. It is desirable in most cases, and necessary in some, that the system return to its nominal position.
7. Space available for the isolation system; and type of isolation devices used.

Some of the more common isolator arrangements are shown in Figure 6-70 (+) and Figure 6-71 (+). The systems shown are assumed to have the same arrangements of isolators in a plane through the center of gravity (c. g.) and perpendicular to the surface of the page. The dynamically balanced system (intersection of the elastic axes and the principal inertia axes located at point A) shown in Figure 6-68 (+), is probably the least common of all suspension systems.

6-49.3.4 Base-Mounted Isolation Systems.

In Figure 6-66a (+), the mass is supported on four (4) isolators. These isolators must provide horizontal, vertical and rotational stiffnesses in order for the system to be stable under all possible motions. There will be coupling between horizontal displacements and rotations about horizontal axes. This arrangement and that shown in Figure 6-69b (+) are appropriate in those cases where there are no convenient supports for horizontal isolators.

The arrangement of Figure 6-69b (+) is preferred since the line of action of the isolators can be directed towards the c. g. of the mass to allow decoupling of some modes. As in the case of Figure 6-69a, the isolators must possess adequate stiffness in axial and lateral directions to insure stability under static and dynamic conditions.

In Figure 6-69c (+), the isolators are oriented parallel to the three orthogonal system axes. This arrangement provides system stability even when the isolators possess only axial stiffness. If the c. g. of the suspended mass is located as shown, decoupling of modes is possible. While the lines of action of the isolators pass through the c. g. under static conditions, response of the system to base motions will obviously alter its geometry. When the line of action of the isolators is changed due to displacement of the mass relative to its supports, coupling of the modes of vibration will be introduced. The degree of coupling is affected by the magnitude of the displacements and the length of the isolators. Consequently, isolator properties and arrangement should be selected so as to minimize the effects of displacements.

6-49.3.5 Overhead Pendulum Systems Using Platforms.

Two arrangements of overhead pendulum shock isolation devices using platforms to support the sensitive components are shown in Figure 6-70 (+). In both cases, the center of gravity of the suspended mass is relatively low. These types of suspension systems have been used extensively in protective structures for various conditions including individual small and large items, multiple items of various sizes as well as a combination of personnel and equipment supported on various sized platforms. The overhead pendulum system normally uses swivel joints at the points of attachment so that the system may swing freely. Horizontal input motions cause the pendulum to swing. Gravity provides the horizontal restoring force or stiffness. This force is a function of the total weight of the suspended mass. The natural frequency of vibration of the pendulum is a function of the length of the pendulum and is given by:

$$f_n = \frac{1}{2\pi}\left[\frac{386.4}{L}\right]^{1/2} \qquad \text{6-57}$$

where

f_n = *natural frequency of vibration*
L = *length of pendulum*

Each pendulum arm includes an isolator which establishes the stiffness of the system in the vertical direction. These isolators can introduce nonlinearities and coupling between the pendulum and vertical spring modes. The system is linear for small angular displacements, that is, when the angular change Θ of the pendulum arm from the vertical position is approximately equal to the sine of the angle ($\Theta = \sin \Theta$). The system can be considered uncoupled if the pendulum frequency is not near one half of the vertical spring frequency. If the pendulum frequency is in the vicinity of one half the vertical frequency, the interchange of energy between the modes can lead to pendulum motions greatly exceeding those predicted by linear assumptions.

In a shock spectra maximum displacements occur at low frequencies, maximum velocities at intermediate frequencies, and maximum accelerations at high frequencies. Since most pendulum systems have low natural frequencies, they are displacement sensitive. These systems attain maximum displacements and minimum accelerations. Consequently, they will normally require greater rattle space than other systems while at the same time providing maximum protection against horizontal accelerations at minimum costs. It should be realized that for explosions, maximum displacements are comparatively small and can be accommodated. One of the main advantages of overhead pendulum systems is that they do not require horizontal stiffness elements. Their attractiveness is greatly diminished in those cases requiring horizontal damping because of large motions.

The swivel joint attaching the pendulum arm to the platform determines the location of the horizontal elastic axis of the system. Figure 6-61b (+) illustrates two ways of varying the point of attachment of the pendulum arm to the platform. The horizontal elastic axis is raised to coincide with the center of gravity of the suspended mass at the equilibrium position and help minimize coupling between modes of response. At the left side of the platform the isolator is contained in a housing rigidly attached to the platform. At the right side, a structural member is rigidly attached to the platform and the isolator is included in the pendulum arm. In addition to supporting personnel and equipment, overhead pendulum systems can be used to shock-isolate building utilities. Individual utility runs may be isolated or several different utilities may be supported on a single platform. A single platform may cover an entire room and all building services may be supported. They would include a hung ceiling, lighting fixtures, utility piping, HVAC ducts, electrical cables and process piping. Of course, flexible connections must be used when connecting the services to the building or equipment.

6-50 SHOCK ISOLATION DEVICES.

6-50.1 Introduction.

A fundamental element of every shock isolation system is some sort of energy storage or energy dissipative device. These devices must be capable of supporting the items to be isolated under static and dynamic conditions and, at the same time, prevent transmission of any harmful shock loads to the items. In most cases, the isolator must have elastic force-displacement characteristics so that the system will return to a nominal equilibrium position after the dynamic loads have been applied. The desirable features of these devices include:

1. The dynamic force-displacement relationship of the isolator should be predictable for all directions in which it is required to provide stiffness.

2. The isolator should have low mass in order to minimize transmission of high frequency motions to the supported mass.

3. The frequency of the isolator should remain constant with changes in load, that is, its stiffness should vary in direct proportion to the load it supports.

This allows the system to remain dynamically balanced throughout changes in the position of the supported mass.

4. The static position of the isolator should be adjustable so that the system can be leveled and returned to its nominal position should the suspended load change.

5. The isolator should have high reliability, long service life and low cost.

The various types of isolators used in most protective construction applications possess these characteristics in varying degrees. Any real isolator has some mass, and in some applications, the mass can be quite large and must be considered in the final analysis. Nonlinear force-displacement characteristics are often accepted to gain some other advantage. In energy dissipative systems, it may be necessary to provide other means of restoring the system to its original position. In general, most devices are some compromise combination of the desirable features which best suit the particular design situation.

The inclusion of energy dissipative (damping) devices in the isolation system offers several significant advantages, that is, damping can:

1. Reduce the severity of output motion response.

2. Reduce the effect of coupling between modes, thus reducing rattle space requirements.

3. Restore the system to an equilibrium position more quickly.

4. Decrease the sensitivity of the system to variations in input motions.

Damping can be provided internally in some isolation devices such as in liquid springs, but must be added externally in others such as those systems using helical coil springs. Different types of damping offer advantages and disadvantages which must be evaluated in the design process. A damping device may be effective in attenuating low frequency components of input motions but can increase the severity of high frequency components. Also, a damping device could prevent the system from returning to its nominal equilibrium position. Thus, care must be exercised in either designing a system employing isolator devices possessing inherent damping characteristics or adding damping devices, if the isolation system is to perform properly.

There are numerous types of isolators which can be used to accomplish the shock isolating function. In the design of protective structures for explosions, the induced building motions are not usually severe and the maximum building displacements are relatively small. As a result, shock isolation systems using helical coil springs (Figure 6-71 (+)) are by far the most common system employed. The reasons for the extensive use of helical springs should be obvious from the discussion below. Other shock isolation devices which may also be used are presented, in less detail, below.

It should be noted that the protective design engineer does not furnish the design for the shock isolator. The engineer designs the shock isolation system to be used but does not design the isolators (in most cases, a helical coil spring). Rather, specifications are furnished which define the desired characteristics of the isolator. For a helical spring, the specifications may include some or all of the following: maximum load, maximum static deflection, maximum dynamic deflection, spring stiffness, maximum height, maximum diameter, and factors of safety regarding allowable stresses and bottoming of the spring. It must be realized that as the number of specified parameters increase, the options available to the spring manufacturer are decreased.

6-50.2 Helical Coil Springs.

A helical coil spring is fabricated from bar stock or wire which is coiled into a helical form. Figure 6-71 (+) illustrates several spring mounts.

The helical coil spring has numerous advantages and comparatively few disadvantages. The advantages are that the spring is not strain-rate sensitive, self-restoring after an applied load has been removed, resists both axial and lateral loads, linear spring rate and requires little or no maintenance. For most applications, the coil spring usually requires a larger space compared to other available shock isolators, and the spring cannot be adjusted to compensate for changes in loading conditions. If the weight of the supported object is changed, it is necessary to either change the spring or add additional springs. For most purposes, the helical coil spring can be considered to have zero damping. If damping is required, it must be provided by external means.

Helical coil springs may be used in either compression or extension. The extension springs are not subject to buckling and may offer a more convenient attachment arrangement. However, extension spring attachments are usually more costly and cause large stress concentrations at the point of attachment. For shock isolation applications, coil springs are generally used in compression. Buckling which can be a problem with compression springs, can be overcome by proper design or through the use of guides which are added either internally or externally to the coils. The discussion below will be concerned primarily with compression springs unless otherwise stated.

Helical coil springs may be mounted in two ways; the ends are either clamped or hinged. In most shock isolation applications, the spring ends are clamped since this method greatly increases the force required to buckle the spring. If space is at a premium, the energy storage capacity may be increased by nesting the springs (placing one or more springs inside the outermost spring). When nesting springs, it is advisable to alternate the direction of coils to prevent the springs from becoming entangled.

Although permanent set may be acceptable in some instances, it is normally required that the system return to its original position after being loaded. This can be accomplished in various ways, but the most common approach in the case of helical coil springs is to prevent inelastic action of the spring.

Helical coil springs are capable of resisting lateral load. While it is possible to use springs in this application, care should be exercised. There are possible arrangements which avoid subjecting the springs to this type of loading.

While the actual design of the helical coil spring is done by the manufacturer, the engineer must be certain that the springs he is specifying can actually be obtained and the space he has allocated for the springs are sufficient. Therefore, preliminary spring sizes must be obtained by the engineer to suit his intended application. It is suggested that available manufacturer's data be used for this purpose.

6-50.3 Torsion Springs.

Torsion springs provide resistance to torque applied to the spring. In shock isolation applications, the torque is usually the result of a load applied to a torsion lever which is part of the torsion spring system. A typical torsion spring shock isolation system is illustrated in Figure 6-72 (+).

Since the axis of a torsion spring is normal to the direction of displacement, it can be used advantageously when space in the direction of displacement is limited. Torsion springs have linear spring rates, are not strain-rate sensitive, are self-restoring, and require little or no maintenance. Torsion springs cannot be adjusted to compensate for changes in weight of shock isolation equipment, and damping must be provided by external means. The axial length of some types may preclude their use when space is limited.

There are three basic types of torsion springs: (1) torsion bars, (2) helical torsion springs, and (3) flat torsion springs. The type to be used will depend upon the space available and the capacity required. The torsion bar is normally used for light to heavy loads, the helical torsion spring for light to moderate loads, and the flat torsion spring for light loads. The torsion bar is the type most commonly found in protective structure applications and is most commonly used where large loads must be supported.

6-50.4 Pneumatic Springs.

Pneumatic springs are springs whose action is due to the resiliency of compressed air. They are used in a manner similar to coil springs. The two basic types are the pneumatic cylinder with single or compound air chambers and the pneumatic bellows. The pneumatic cylinder is shown schematically in Figure 6-73 (+).

Pneumatic springs have the advantage of being adjustable to compensate for load changes. The spring rate can be made approximately linear over one range of deflection but will be highly nonlinear over another. They are quite versatile due to the variety of system characteristics which can be obtained by regulation of the air flow between the cylinder chamber and the reservoir tank. Some of the possible variations include:

1. Velocity-sensitive damping by a variable orifice between chamber and reservoir.

2. Displacement-sensitive damping by a variable orifice controlled by differential pressure between chamber and reservoir.

3. A nearly constant height maintained under slowly changing static load by increasing or decreasing the system air content using an external air supply and a displacement-sensitive servo-system controlling inlet and exhaust valves.

   A constant height under widely varying temperatures achieved by the same system described for maintaining a constant height.

The disadvantages of pneumatic springs include higher cost and more fragile construction. They have a limited life span in comparison to mechanical springs and must be maintained. Also these springs provide resistance for axial loads only.

6-50.5 Liquid Springs.

A liquid spring consists of a cylinder, piston rod, and a high pressure seal around the piston rod. The cylinder is completely filled with a liquid, and as the piston is pushed into the cylinder, it compresses the liquid to very high pressures. The configurations of liquid springs are divided into three major classes according to the method of loading. The classes are simple compression, simple tension and compound compression-tension. Although they are loaded in different ways, all three types function as a result of compression of the liquid in the cylinders. Schematics of the tension and compression types are shown in Figure 6-74 (+). The compound spring is merely a more complex mechanical combination of the two basic types. The tension type is the more common in protective construction applications. The cylinders are often fitted with ported heads to guide the piston and provide damping. Damping can also be provided through the addition of drag plates to the piston rods.

Liquid springs are very compact devices with high, nearly linear, spring rates. They can be adjusted to compensate for load changes, are self-restoring and can absorb larger amounts of energy. They are highly sensitive to changes in temperature and fluid volume changes. Because liquid springs normally operate at high pressures, high quality, close tolerance seals are required around the piston. Friction between the seal and piston provides appreciable damping and increases the spring rate from 2 to 5 percent. Liquid springs are high pressure vessels requiring high quality materials and precision machine work, and as a result, they are expensive. However, they are difficult to equal as compact energy absorption devices.

6-50.6 Other Devices.

6-50.6.1 Introduction.

The helical, torsion, pneumatic and liquid springs are the more common types of isolators for larger masses. There are other devices especially suited for particular applications and smaller loads. Some of these isolators are discussed below.

6-50.6.2 Belleville Springs.

Belleville springs, also called Belleville washers or coned-disc springs, are essentially spring steel washers which have been formed into a slightly conical shape. A typical Belleville spring is illustrated in Figure 6-75 (+).

The main advantage of Belleville springs over other types of springs is the ability to support large loads at small deflections with minimum space requirements in the direction of loading. They are useful in applications requiring limited shock attenuation and as backup systems to reduce shock in the event of bottoming of coil springs. They are relatively inexpensive and readily available in capacities up to 60,000 pounds. Changes in loading conditions are accommodated by the addition or removal of units.

6-50.6.3 Flat Springs.

A flat spring is simply a steel beam or plate whose physical dimensions and support conditions are varied to provide the desired force displacement relationship. The two basic configurations are the simple spring with one element and leaf springs with multiple elements. Flat springs normally require only a limited amount of space in the direction of displacement and provide linear, non-strain-rate sensitive and self-restoring spring. They require little or no maintenance. Single element flat springs can be considered to have no damping while leaf springs will exhibit some damping due to the friction between individual elements.

6-50.6.4 Solid Elastomer Springs.

Solid elastomer springs are made from rubberlike materials. They are often called shock mounts because of their wide use in shock isolation applications. They are normally used in medium to light duty applications and represent an. economical solution to the isolation of small items of equipment. However, these springs will allow only small displacements. These springs are fabricated from a wide variety of natural and synthetic rubbers and compounds and in numerous sizes and shapes to satisfy a wide range of applications. Because of the range in capacity and characteristics of commercially available units, only in unusual cases is it necessary to design a unit.

In most applications, the solid elastomer spring will require little space and exhibits good weight to energy storage ratios. Use of these springs requires consideration of the operating environment. The desirable properties of some elastomers can be significantly degraded when exposed to low or high temperatures, sunlight, ozone, water or petroleum products.

The response of elastomeric springs is nonlinear in most applications because of the nonlinear stress-strain properties of elastomers. The springs are self-damping because of the viscoelastic properties of the elastomers. They are almost always in compression because of bonding limitations. These springs will only permit comparatively small displacements.

6-51 HARDMOUNTED SYSTEMS.

Some items of equipment do not require shock isolation because the predicted motions at their point of attachment to the supporting structure does not exceed their shock tolerance. Those items can normally be hardmounted to the supporting structure. A hardmount is a method of attachment which has not been specifically designed to provide a significant reduction in the input motions to the equipment. Since all methods of attachment exhibit some flexibility, there is no precise division between shock isolators and hardmounts. Both types of devices will modify input motions to some degree. However, the modification of input motions produced by hardmounts will generally be small while shock isolators can greatly affect these motions.

In contrast to shock isolation systems, hardmounted systems will normally exhibit natural frequencies much higher than those corresponding to the lower modes of vibration of the supporting structure. Although this characteristic offers the advantage of reduced rattlespace, it also provides for the more efficient transmission of higher frequency components of the support structure motion to the attached item. Thus, it would appear that a more exact structural analysis is required for hardmounted systems in order to include higher modes of vibration. In practice, the need for exact analyses is at least partially offset by higher factors of safety in mount design and equipment shock tolerance. However, such an approach can lead to unrealistic attachment designs. A more practical approach is to choose, or design, attachments which limit the fundamental frequency of the hardmounted system. A lower frequency system provides some attenuation of higher frequency input motions, and reduces the possibility of resonance with high frequency motions resulting from stress wave reflections within structural elements. Although the choice of a natural frequency will depend on the properties of the supporting structure and the hardmounted equipment, fundamental frequencies in the range of 10 to 1000 cycles per second are reasonable for most applications. The approach chosen for hardmount design is normally a combination of higher safety factors and the use of lower frequency systems. The design will be based upon considerations of cost, importance of the item supported, the size and weight of the item, and the consequence of failure of the attachment system.

The use of shock spectra to define the input motions of hardmount systems is considered adequate for final design of all simple hardmount systems of a noncritical nature. It is also considered adequate for preliminary design of critical systems and those whose representation as a single degree of freedom system is questionable. However, it is recommended that the final design be performed using a more exact dynamic analysis wherever practical.

6-52 ATTACHMENTS.

6-52.1 Introduction.

In a shelter type structure subjected to air blast and ground shock effects, all interior contents must be firmly attached to the structure. This attachment insures that the building contents will not be dislodged and become a source of injury to personnel or

damage to critical equipment. The building contents would include not only equipment which is either shock isolated or hardmounted (attached directly to structure) but also the building utilities as well as interior partitions and hung ceilings. The building utilities would include all piping (such as process, potable water, sanitary, fire protection, etc.), HVAC ducts, electrical cables, light fixtures and electrical receptacles.

6-52.2 Design Loads.

An object subjected to a shock loading produces an inertial force which acts through its center of gravity. The magnitude of this force is given by:

$$F = Wa$$

where

F = *inertial force*
W = *weight of object*
a = *acceleration in g's*

Accelerations may be imparted to the object in one or more directions producing inertial forces in the respective directions. These inertial forces are resisted by the reactions developed at the object's supports. All inertial forces are assumed to be acting on the object concurrently. The support reactions are obtained by considering the static equilibrium of the system.

Figure 6-68 Shock Isolation System

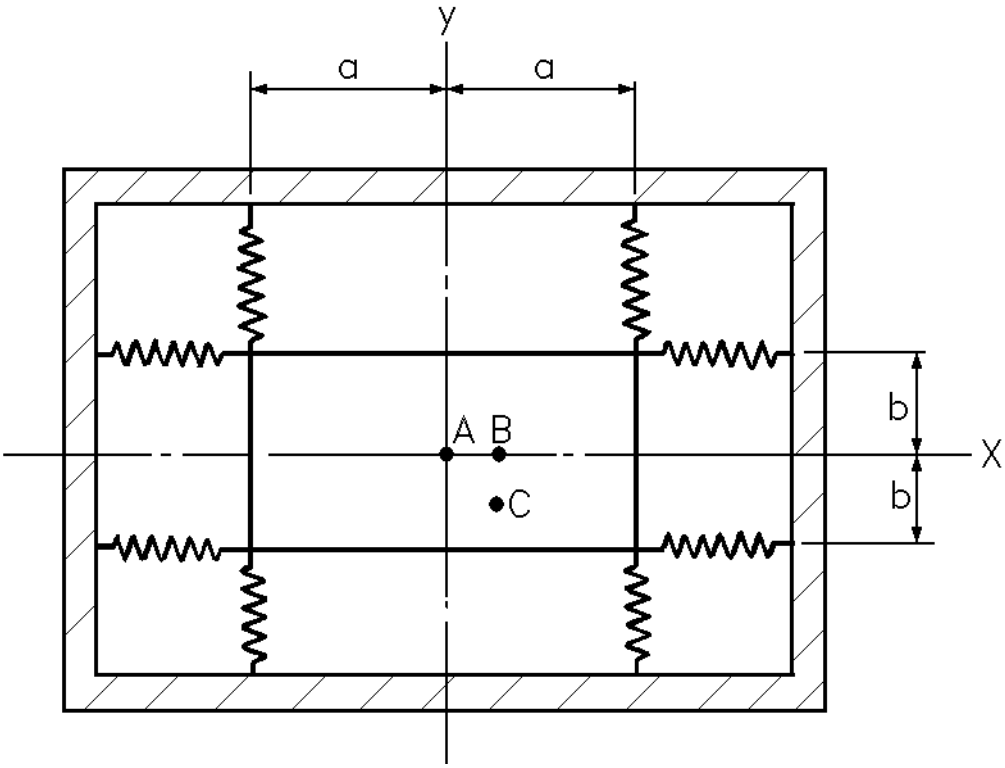

Figure 6-69 Base Mounted Isolation Systems Configuration

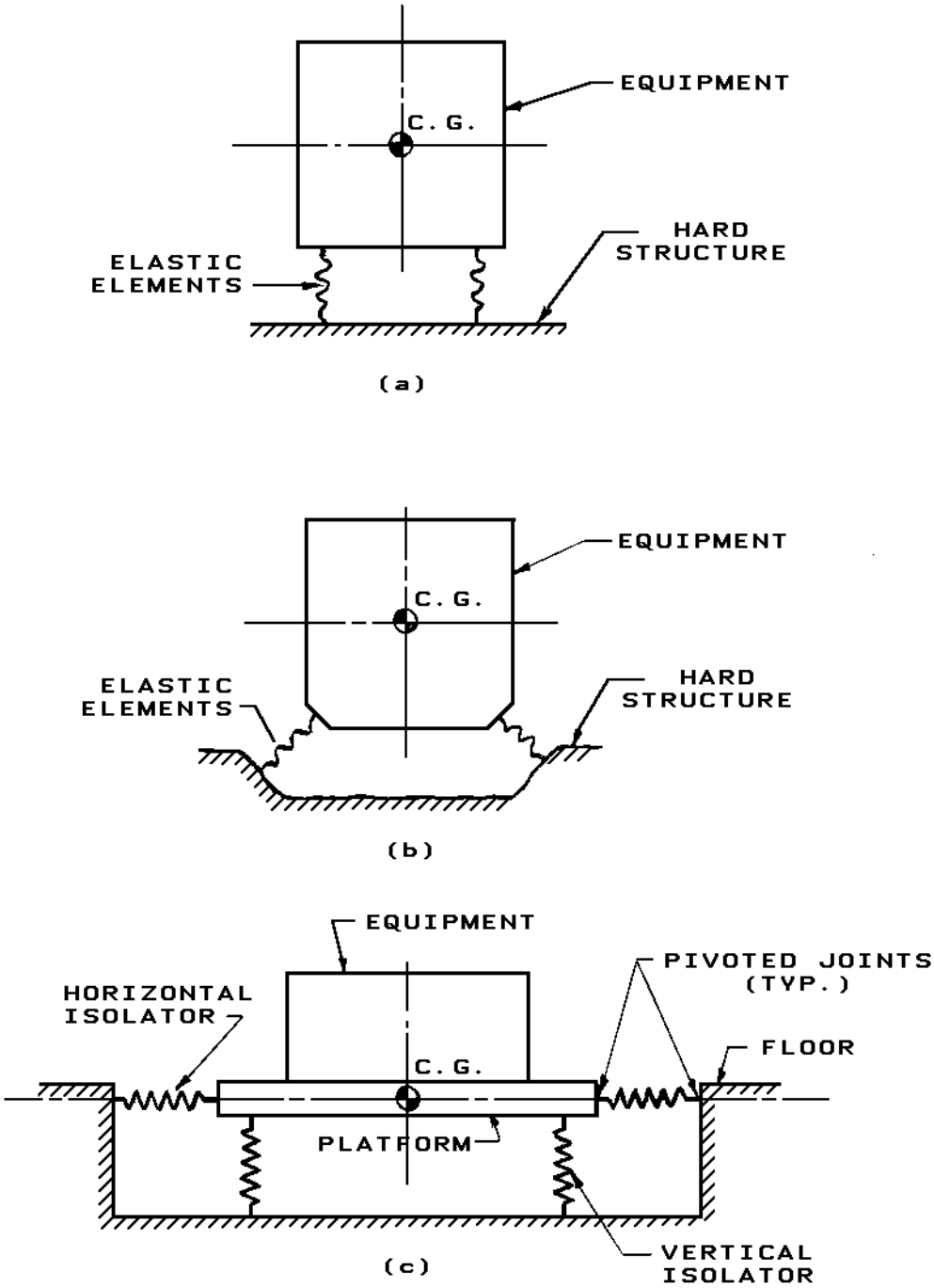

Figure 6-70 Overhead Pendulum Shock Isolation Systems Using Platforms

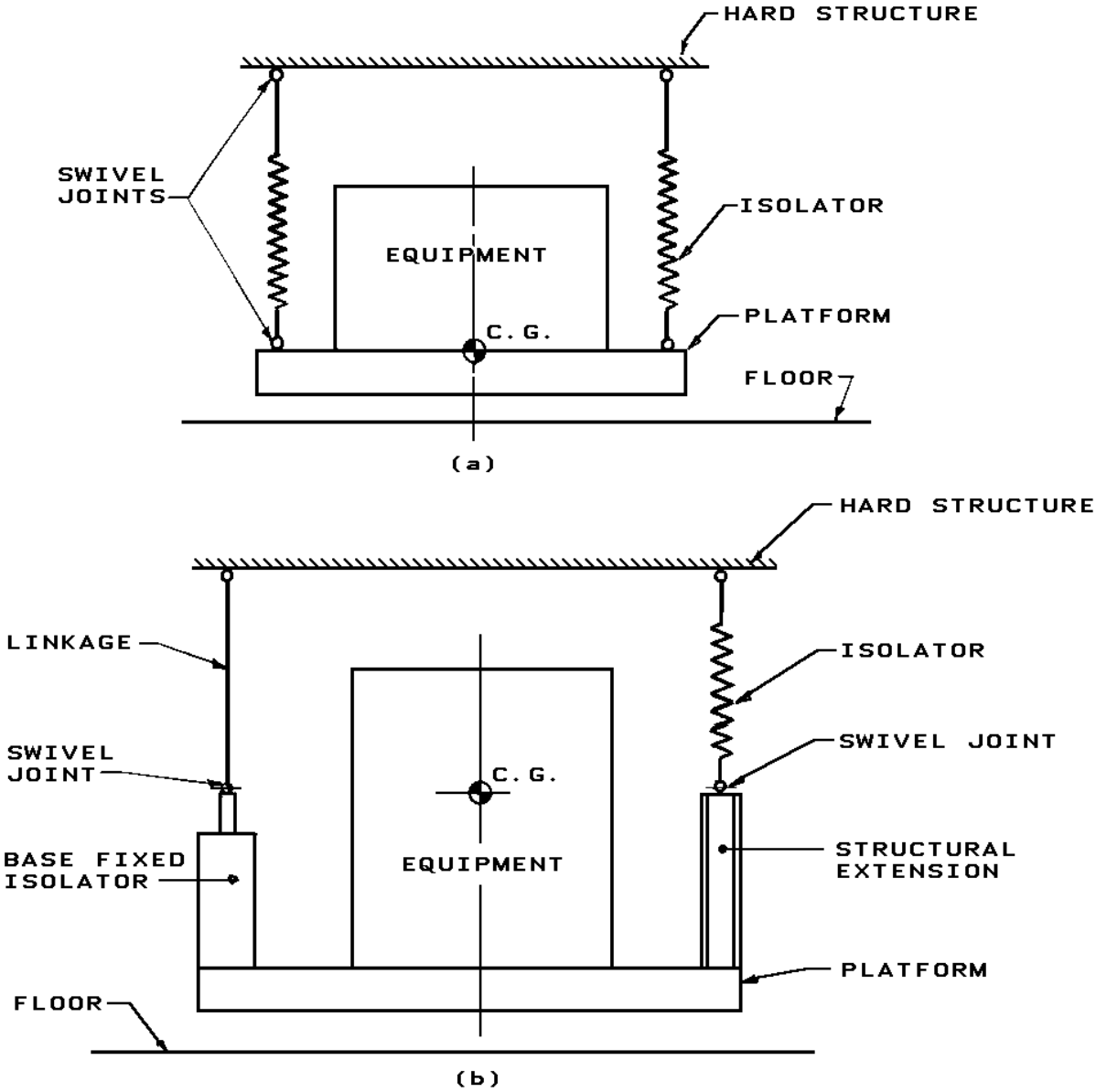

Figure 6-71 Helical Compression Spring Mounts

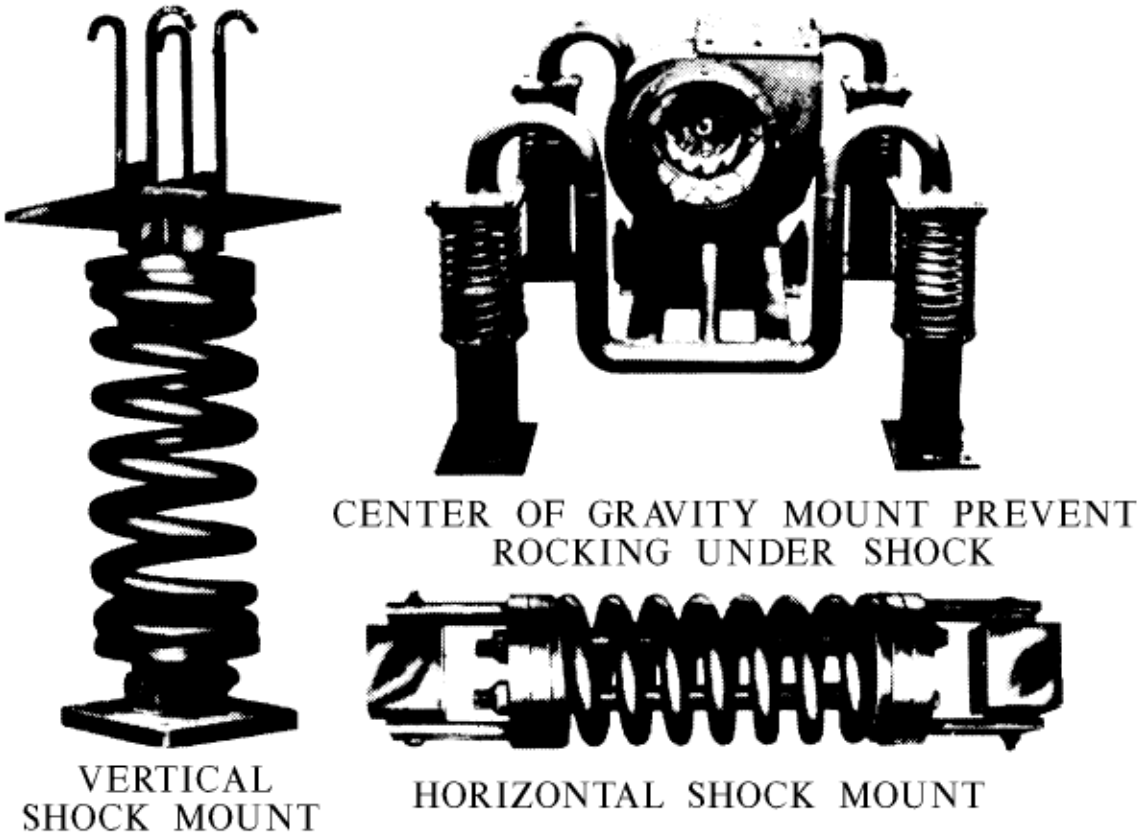

Figure 6-72 Typical Torsion Spring Shock Isolation System

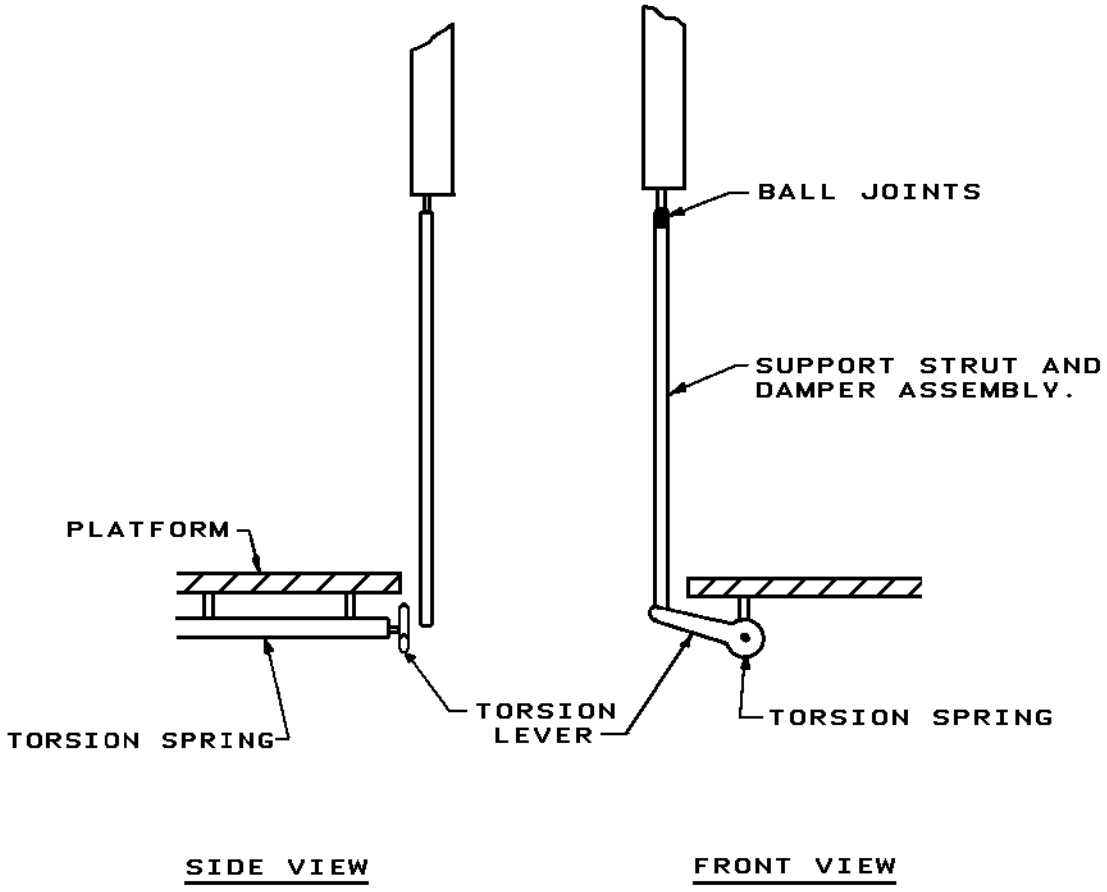

Figure 6-73 Schematic of Single and Double Action Pneumatic Cylinders

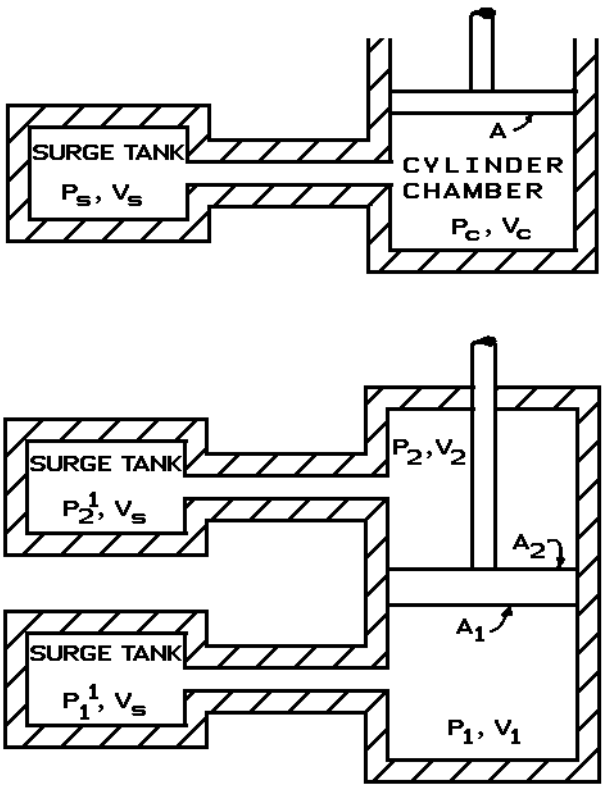

Figure 6-74 Schematic of Liquid Springs

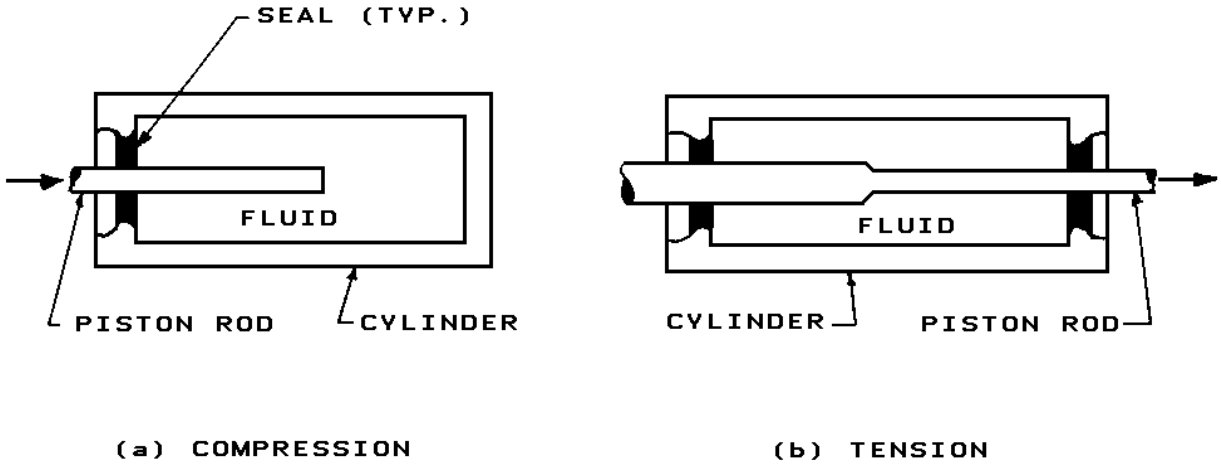
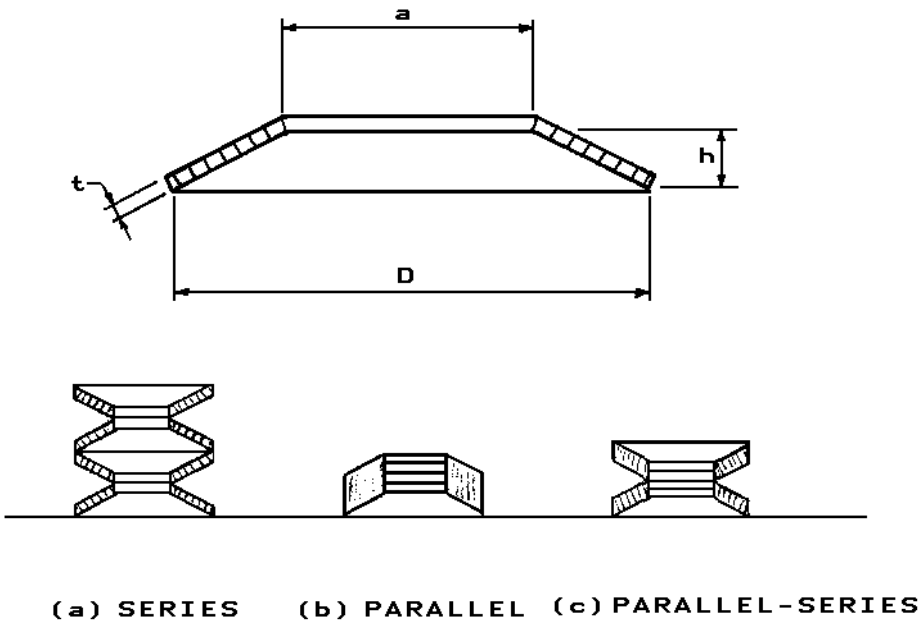
Figure 6-75 Belleville Springs