APPENDIX 6: SPECIAL CONSIDERATIONS IN EXPLOSIVE FACILITY DESIGN

APPENDIX 6A ILLUSTRATIVE EXAMPLES

\1\

PROBLEM 6A-1 REINFORCED AND UNREINFORCED MASONRY WALL DESIGN

Problem 6A-1a: Design a reinforced masonry wall for an exterior blast load.

Procedure:

Step 1. Establish design parameters.

a. Pressure-time loading

b. Structural configuration including geometry, support conditions, and required Protection Category of wall.

Step 2. Select masonry unit size and the size and spacing of the primary steel reinforcement (i.e. vertical steel reinforcing bars) and secondary joint reinforcement. Also determine the static design strengths for the masonry and the steel reinforcement (Section 6-7.3).

Step 3. Calculate the dynamic design strengths of the masonry and steel reinforcement, using the static strengths from Step 2 and Table 6-2 (+).

Step 4. Using the dynamic design strengths from Step 3, the size and spacing of reinforcement, and *d,* the depth of the reinforcement, determine the ultimate moment capacity of the wall (Equation 6-2). Check that maximum and minimum requirements for reinforcement ratio and reinforcement spacing are met.

Step 5. Determine the ultimate resistance of the wall using the ultimate moment capacity of Step 4 and the equations of Table 3-1 (+) for one-way spanning elements.

Step 6. Determine the average moment of inertia based on I_n and I_c (Equation 6-10). Use Equation 6-1 to find the net moment of inertia of the masonry section I_n. Use Equation 6-11 and the depth of the reinforcement to calculate the moment of inertia of the cracked section I_c.

Step 7. Calculate the modulus of elasticity of the masonry unit E_m from Equation 6-2 and the masonry unit compression strength of Step 2.

Step 8. Use the average moment of inertia from Step 6, the modulus of elasticity from Step 7, and the equations from Table 3-8 (+) to find the equivalent elastic stiffness.

Step 9. Determine the equivalent elastic yield deflection using the ultimate resistance (Step 5), the equivalent stiffness (Step 8), and Equation 3-36.

Step 10. Find the load-mass factor, K_{LM}, for the elastic and plastic ranges from Table 3-12 (+). Average these values to determine the average value of K_{LM} to be used for the wall response calculations. Calculate the areal mass (mass divided by the blast loaded area) of the masonry unit and multiply by K_{LM} to obtain the effective areal mass of the wall.

Step 11. Calculate the natural period of vibration from Equation 3-60, the effective mass from Step 10 and the equivalent stiffness from Step 8.

Step 12. Determine response chart parameters.

a. Peak dynamic loading P (Step 1)

b. Ultimate resistance r_u (Step 5)

c. Duration of load T (Step 1)

d. Natural period of vibration T_N (Step 11)

Calculate the ratio of ultimate resistance to peak dynamic loading (r_u/P) and duration of load to natural period (T/T_N). Using these ratios and the appropriate figures (Figures 3-54 (+) through 3-266 (+/+/+)) determine the ductility ratio X_m/X_E.

Step 13. Compute the maximum deflection X_m by multiplying the ductility ratio by the elastic yield deflection of Step 9. From Table 3-5 (+) and the value of X_m, find the maximum support rotation. Find the maximum rotation permitted from Table 6-3 (+) for the required Protection Category in Step 1 and compare with the calculated maximum support rotation. If the rotation is larger than that permitted, repeat Steps 1 through 13.

Step 14. Determine the ultimate out-of-plane shear force at d from the support. Calculate the out-of-plane shear capacity based on the shear area (Equation 6-4) and shear strength (Equation 6-3). If the shear force exceeds the shear capacity, consider increasing the wall thickness and reducing the steel reinforcement to cause the wall to have the same ultimate resistance with a larger value of d, which will increase the shear capacity without increasing the shear force. Alternatively, the shear capacity can be increased with shear reinforcement (Equation 6-5) placed in the masonry mortar beds if the block height is less than $d/2$. However, this is not possible for CMU block unless 12 inch thick CMU is used with two layers of reinforcement.

Step 15. Use the ultimate resistance from Step 5 and equations in Table 3-9 (+) to calculate the ultimate shear load at the support for inbound response. Use X_m/X_E and T/T_N (both values from Step 12) to find the maximum rebound resistance from Figure 3-268 (+). Use this resistance and Table 3-9 (+) to

calculate the rebound shear load at the support. Design the wall connections to resist both loads.

Step 16. Determine the in-plane shear load for the worst case shear wall and in-plane shear area (Equation 6-4) and shear capacity (Equation 6-3) for the wall. Check that the combined in-plane and out-of-plane shear satisfy the interaction formula (Equation 6-7).

EXAMPLE 6A-1 MASONRY WALL DESIGN

Problem 6A-1a: Design a reinforced masonry wall for an exterior blast load.

Solution:

Step 1. Given:

a. The design blast pressure history from a far range, exterior explosion is shown in Figure 6A-1a (+) below. This blast load has a peak pressure of 2 psi and the duration of 100 milliseconds. The wall will not be exposed to any fragmentation hazard and will not be placed in net tension from static or blast loads.

b. The wall is simply supported and spans vertically between the floor slab and roof diaphragm with a clear span of 150 inches. The wall must be designed for Protection Category 1. The wall is connected to the floor slab and roof diaphragm with dowels matching the wall reinforcement. The CMU walls are shear walls for the building, which has plan dimensions with an aspect ratio of 2:1. Only the grouted cells in the wall are reinforced. Since the design criteria satisfy the direct shear requirements of section 6-7.3.5, no direct shear check is required.

Step 2. Use 8 in thick (nominal thickness), medium weight, concrete masonry units (CMU) reinforced with No. 4 rebar at 16 in o.c. placed at mid-thickness in the wall. Use ladder or truss joint reinforcement with two longitudinal W1.7 wires in bed joints at every other course (16 inches). Assume the static compressive stress (f'_m) is 2000 psi per Section 6-7.3.2 and the reinforcement yield stress is 60,000 psi. The actual wall thickness T is 7.63 inches.

Step 3. Determine dynamic design stresses. (Table 6-2 (+))

Masonry (f'_{dm}):

Compression	- 1.19 (2,000) = 2,380 psi
Diagonal tension	- 1.00 (2,000) = 2,000 psi

Reinforcement (f_{dy}): - 1.17 (60,000) (1.1) = 77,200 psi

Step 4. Determine the ultimate moment capacity of the wall and check that the minimum and maximum criteria for the reinforcement area and spacing are satisfied.

a. Determine the ultimate moment capacity of the wall (Equation 6-9)

$$a = \frac{A_s f_{ds}}{0.85 b f'_{dc}}$$

$$a = \frac{0.20 \times 77{,}200}{0.85 \times 16 \times 2380} = 0.48 inch$$

$$M_u = \frac{A_s f_{ds}}{b}(d - a/2)$$

$$M_u = \frac{0.20(77{,}200)(3.81 - 0.48/2)}{16} = 3450 \text{ in} - \text{lb/inch}$$

Figure 6A-1a

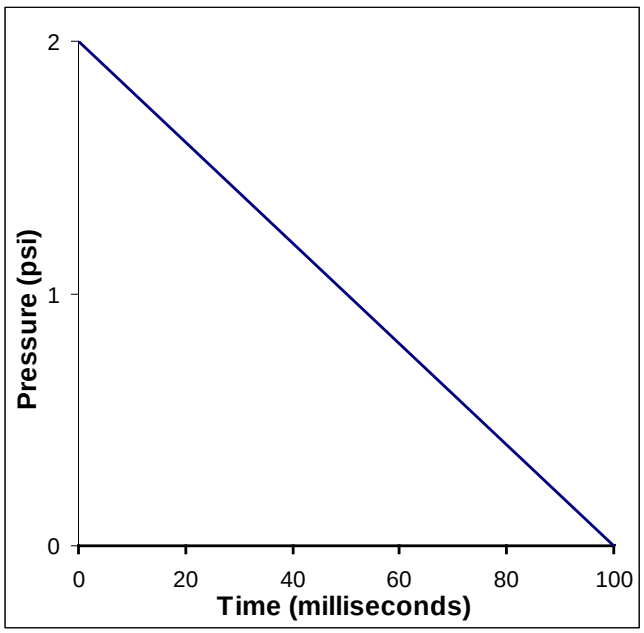

b. Check minimum and maximum steel ratio for reinforcement (Table 6-4 (+))

$$A_s \geq 0.0006bd$$

$$0.2in^2 \geq 0.0006(16)(3.81) = 0.037in^2$$

The reinforcing steel area exceeds the minimum requirement - OK

$$A_s \leq 0.005bd$$

$$0.2in^2 \leq 0.005(16)(3.81) = 0.30in^2$$

The reinforcing steel area does not exceed the maximum requirement – OK

c. Check that the maximum and minimum reinforcement spacing requirements are met (Section 6-8.3)

The spacing of the vertical rebar is 16 inches. This is not greater than the maximum spacing for walls not fully grouted of 3 times the nominal wall thickness (i.e. 24 inches), and it is not less than the minimum spacing of one bar per cell (i.e. 8 inches) - OK

Step 5. Calculate ultimate resistance (Table 3-1 (+))

$$r_u = \frac{8M_p}{L^2}$$
$$= \frac{8(3450)}{150^2}$$
$$= 1.23\text{psi}$$

Step 6. Find the average moment of inertia of the wall.

a. Calculate the moment of inertia of net section (Equation 6-1 and Table 6-1 (+))

$$I_n = I_m + \frac{(t - 2t_s)^3}{12}\frac{V}{100}\psi_m$$
$$= 27 + \frac{(7.63 - 2(1.25))^3}{12}\frac{50}{100}(0.81)$$
$$= 31.6 in^4 / in$$

b. Calculate the moment of inertia of cracked section (Equation 6-11)

$$I_c = 0.005d^3$$
$$= 0.005(3.81)^3$$
$$= 0.27 in^4 / in$$

c. Calculate the average moment of inertia (Equation 6-10)

$$I_a = \frac{I_n + I_c}{2}$$
$$= \frac{31.6 + 0.27}{2}$$
$$= 15.9\text{in}^4/\text{in}$$

Step 7. Compute modulus of elasticity of the masonry unit (Equation 6-2).

$E_m = K_m f'_m$

$E_m = 900\ (2000)$

$= 1.8 \times 10^6$ psi

Step 8. Determine the equivalent elastic stiffness of the wall (Table 3-8 (+)).

$K_E = (384 E_m I_a) / 5L^4$

$= (384)(1.8 \times 10^6)(15.9) / 5(150^4)$

$= 4.34$ psi/in

Step 9. Calculate the equivalent elastic deflection of the wall (Equation 3-36).

$X_E = r_u / K_E = 1.23/4.34 = 0.28$ in

Step 10. Calculate the effective areal mass of the wall.

a. Find the average load-mass factor K_{LM} (Table 3-12 (+))

Elastic $K_{LM} = 0.78$

Plastic $K_{LM} = 0.66$

For limited plastic deflections

$K_{LM} = [0.78 + 0.66]/2 = 0.72$

b. Determine the areal weight (w) and areal mass (m) of the wall. Only the reinforced cells are assumed to be grouted, so the percentage of grout-filled cells, V, is 50%.

Using Equation 6-1 and Table 6-1 (+)

$$w = \left(A_{fs}\rho_m + (1 - A_{fs})\frac{V}{100}\rho_g \right) T$$

$$= \left(0.47\frac{115}{1728} + (1 - 0.47)\frac{50}{100}\frac{120}{1728} \right) 7.63$$

$$= 0.379 \text{ psi}$$

$$\text{m} = \frac{\text{w}}{g}$$

$$= \frac{0.379}{32.2(12)(1\text{x}10^{-6})} = 981 psi\ \frac{ms^2}{in}$$

c. Calculate effective areal mass

$m_e = K_{LM}\, m$

$= 0.72 \times 981$

$= 706$ psi-ms^2/in

Step 11. Determine the natural period of vibration of the wall (Equation 3-60).

$T_N = 2\pi\,(m_e / K_E)^{1/2}$

$= 2\pi\,(706/4.34)^{1/2}$

$= 80$ ms

Step 12. Determine the response of the wall.

a. Calculate design chart parameters

$T/T_N = 100.0/80 = 1.25$

$r_u / P = 1.23/2.0 = 0.62$

b. From Figure 3-54 (+)

$\mu = X_m / X_E = 9.0$

Step 13. Calculate maximum deflection and check support rotation.

a. Compute maximum deflection

$X_m = \mu X_E$

$= 9.0 \times 0.28$

$= 2.52$ in

b. Calculate support rotation (Table 3-5 (+))

$\Theta = \tan^{-1}(2X_m / L)$

$= \tan^{-1}(2 \times 2.52 / 150)$

$= 1.9°$

c. Compare the maximum support rotation with response criteria from Table 6-3 (+) for unreinforced wall with Protection Category 1.

$\Theta = 1.9° \leq 2°$ O.K.

Step 14. Check out-of-plane shear strength of wall.

a. Calculate ultimate shear force (out-of-plane) at distance *d* from support.

$$V_{uo} = r_u\left(\frac{L}{2} - d\right)$$
$$= 1.23\left(\frac{150}{2} - 3.81\right)$$
$$= 87.5\,\text{lb/in}$$

b. Find shear area for out-of-plane shear (Equation 6-4a)

$$A_{no} = \left(A_{fs} + (1 - A_{fs})\frac{V}{100}\right)d$$
$$= \left(0.47 + (1 - 0.47)\frac{50}{100}\right)(3.81)$$
$$= 2.8\text{in}^2/\text{in}$$

c. Compute out-of-plane shear strength (Equation 6-3)

$$V_{mo} = 2\sqrt{f'_m}A_n$$
$$= 2\sqrt{2000}(2.8)$$
$$= 250 lb/in \quad > \quad 87.5 lb/in$$

The shear strength exceeds the shear force – OK

Step 15. Design connections

a. Find maximum rebound resistance

T/T_N = 1.25

X_m/X_E = 9.0

From Figure 3-268 (+)

r^-/r_u = 0.98

r^- = 0.98 × 1.23 = 1.21 psi

The maximum rebound resistance is nearly equal to the ultimate resistance. The inbound and rebound connection force can both be based on the ultimate shear load at the support.

b. Calculate connection design load, which is equal to ultimate shear

force at support.

$$V_u = \frac{r_u L}{2}$$
$$= \frac{1.23(150)}{2} = 92 \text{ lb/in}$$

c. Check connection strength of dowels matching wall reinforcement acting in shear friction at supports (Equation 6-8). Note that the dynamic increase factor for shear reinforcing steel in Table 6-2 (+) is 1.0.

$$V_{dm} = 0.6 A_{v\,d} f_{dy}$$
$$= 0.6\left(\frac{0.2in^2}{16in}\right)(66000)$$
$$= 495 lb/in \quad > \quad 92 lb/in$$

The direct shear strength of the dowels across the top and bottom support of the wall exceeds the connection design load – OK

Step 16. Check the response of the wall as a shear wall resisting the dynamic reaction at the top of the wall on the perpendicular side of the building to blast load. Since the building plan has a 2:1 aspect ratio (i.e. $L_2/L_1 = 2$), the in-plane shear can be calculated as shown below using V_u in Step 15b.

a. Calculate in-plane shear force for the worst case shear wall.

$$V_{ui} = \frac{V_u L_2}{2L_1}$$
$$= \frac{(92 lb/in)2}{2}$$
$$= 92 \text{ lb/in}$$

b. Find the in-plane shear area (Equation 6-4b). $K_v = 0$ for a partially grouted wall. The face shell thickness t_s is shown in Table 6-1 (+).

$$A_{ni} = \left(K_v T + (1 - K_v) 2t_s\right)\frac{L_V}{L}$$
$$= \left(0(7.63) + (1-0)(2)(1.25)\right)0.8$$
$$= 2.0 in^2/in$$

c. Compute the in-plane shear strength of the wall (Equation 6-3).

$$V_{mi} = 2\sqrt{f'_m}A_n$$
$$= 2\sqrt{2000}(2.0)$$
$$= 179 lb/in$$

d. Check that the interaction equation for in-plane and out-of-plane shear is satisfied (Equation 6-7). Note that V_{so} and V_{si} are the in-plane and out-of-plane shear forces, respectively, resisted by shear reinforcement, which are both equal to zero in this case (i.e. wall has no shear reinforcement).

$$\left(\frac{V_{uo}}{V_{mo}+V_{so}}\right)^2 + \left(\frac{V_{ui}}{V_{mi}+V_{si}}\right)^2 \le 1.0$$

$$\left(\frac{87.5}{250+0}\right)^2 + \left(\frac{92}{179+0}\right)^2 = 0.38 \le 1.0$$

The combined effect of in-plane and out-of-plane shear stress satisfy the interaction formula – OK.

PROBLEM 6A-1B: ANALYZE AN UNREINFORCED MASONRY WALL FOR AN EXTERIOR BLAST LOAD.

Procedure:

Step 1. Establish design parameters.

a. Pressure-time loading.

b. Structural configuration including geometry, support conditions, and required Protection Category of wall.

Step 2. Determine masonry unit size. Also determine a conservative estimate for the static strength for the masonry (Section 6-7.3).

Step 3. Calculate the dynamic design compressive and flexural strengths of the masonry using the static strength from Step 2, Table 6-2 (+), and Section 6-7.3.3.

Step 4. Using the dynamic flexural strength from Step 3, determine the ultimate moment capacity of the wall (Equation 6-12). Use cross sectional properties from Table 6-1 (+).

Step 5. Calculate the ultimate flexural resistance of the wall using the ultimate moment capacity of Step 4 and the equations of Table 3-1 (+) for one-way spanning elements.

Step 6. Determine the moment of inertia of the masonry section from Table 6-1 (+).

Step 7. Calculate the modulus of elasticity of the masonry unit E_m from Equation 6-2 and the masonry unit compression strength of Step 2.

Step 8. Use the moment of inertia from Step 6, the modulus of elasticity from Step 7, and the equations from Table 3-8 (+) to find the elastic stiffness.

Step 9. Determine the elastic yield deflection using the ultimate resistance (Step 5), the stiffness (Step 8), and Equation 3-36.

Step 10. Calculate the areal mass (mass divided by the blast loaded area) of the wall.

Step 11. Calculate the ultimate resistance from axial load arching using Equation 6-13.

Step 12. Construct the resistance-deflection curve for the wall response based on Figure 6-13 (+).

Step 13. Determine the load-mass factor, K_{LM}, for each stiffness region of the resistance-deflection curve.

Step 14. Calculate the natural period of vibration from Equation 3-60, using the areal mass from Step 10, the elastic stiffness from Step 8, and K_{LM} for elastic flexural response from Step 13.

Step 15. Use a time-stepping dynamic analysis to determine the wall response. This is necessary because of the complex shape of the resistance-deflection curve. Use a time-stepping method to solve the equation of motion for the acceleration of the equivalent SDOF system representing the wall at each time step and use numerical integration to determine the corresponding velocity and displacement. See Section 3-19.2.1.1 for more explanation. Apply this method until a maximum deflection X_m is calculated.

Step 16. Calculate the maximum support rotation of the wall using Table 3-5 (+) and the value of X_m, from Step 15. Use the information in Table 6-3 (+) to determine the maximum support rotation for the Protection Category in Step 1 and compare with the calculated rotation. If the calculated rotation is larger than that permitted, the wall must be structurally upgraded.

Step 17. Determine the ultimate out-of-plane shear force at *d* from the support based on the maximum resistance of the wall from Step 15. Calculate the out-of-plane shear capacity based on the shear area (Equation 6-4) and shear strength (Equation 6-3). If the shear force exceeds the shear capacity, the wall must be upgraded.

Step 18. Use the ultimate flexural resistance from Step 5 and equations in Table 3-9 (+) to calculate the ultimate shear load at the support for inbound response. Use this shear load as the connection load for inbound and rebound response. Compare this load to the capacity of the wall connections to its supports. Design upgrades for the wall connections if necessary.

Step 19. Determine the in-plane shear load for the worst case shear wall and in-plane shear area (Equation 6-4) and shear capacity (Equation 6-3) for the wall. Check that the combined in-plane and out-of-plane shear satisfy the interaction formula (Equation 6-7).

PROBLEM 6A-1B: ANALYZE AN UNREINFORCED MASONRY WALL FOR EXTERIOR BLAST LOAD

Solution:

Step 1. Given:

a. The design blast pressure history from a far range, exterior explosion has the same shape shown in Figure 6A-1a (+), except the peak pressure is 1.4 psi and the duration is 40 milliseconds. The wall will not be exposed to any fragmentation hazard and will not be placed in net tension from static or blast loads.

b. The 8 inch CMU wall spans vertically with simple supports at the floor slab and roof diaphragm with a clear span of 120 inches. It laterally supports a 4 inch brick non-structural veneer wall. The wall must provide Protection Category 1. The wall has #4 rebar dowels at 48 inches o.c. and a bond beam at the top. The CMU walls are shear walls for the building, which has plan dimensions with an aspect ratio of 2:1. The wall is ungrouted and is not a load-bearing wall. Since the design criteria satisfy the direct shear requirements of section 6-7.3.5, no direct shear check is required.

Step 2. The wall is 8 in thick (nominal thickness), light weight, concrete masonry units (CMU) without any steel reinforcement or grouted cells. Assume the static compressive stress (f'_m) is 1300 psi based a review of recommended values for ungrouted CMU. The actual wall thickness *T* is 7.63 inches.

Step 3. Determine dynamic design stresses. (Table 6-2 (+))

Masonry:

Compression (f'_{dm}) - 1.19 (1,300) = 1,547 psi

Flexural tension (f_{dt}) - 200 psi (per Section 6-7.3.3)

Step 4. Determine the ultimate moment capacity of the wall

a. Determine the section modulus (S) for the CMU wall based on the moment of inertia (I) from Table 6-1 (+).

$$S = \frac{I}{T/2} = \frac{28}{3.81} = 7.34\,\frac{in^3}{in}$$

b. Determine the ultimate moment capacity of the CMU wall based on the flexural tension strength (ft) from Step 3 and the section modulus using Equation 6-12. The axial load P is zero.

$$M_{du} = S\left(f_{dt} + \frac{P}{A}\right)$$
$$= 7.34(200+0) = 1{,}468 lb - in / in$$

Step 5. Calculate flexural ultimate resistance, r_u, of the wall based on the ultimate moment capacity from Step 4 and equations in Table 3-1 (+).

$$r_u = \frac{8M_p}{L^2}$$
$$= \frac{8(1468)}{120^2}$$
$$= 0.82 \text{psi}$$

Step 6. Find the moment of inertia (I) of the CMU wall from Table 6-1 (+).

I = 28 in^4/in

Step 7. Compute the modulus of elasticity of the CMU masonry unit (Equation 6-2).

$E_m = K_m f'_m$

E_m = 900 (1300)

= 1.2×10^6 psi

Step 8. Determine the elastic stiffness of the CMU wall (Table 3-8 (+)).

$K_E = (384 E_m I) / 5L^4$

= $(384)(1.2 \times 10^6)(28) / 5(120^4)$

= 12.4 psi/in

Step 9. Calculate the elastic deflection of the CMU wall (Equation 3-36).

$X_E = r_u / K_E$ = 0.82/12.4= 0.07 in

Step 10. Calculate the areal mass of the CMU wall and brick veneer wall. Assume the density of the light weight CMU is 95 lb/ft^3 and the density of the brick is 120 lb/ft^3.

a. Determine the areal weight of CMU using Equation 6-1 and Table 6-1 (+) and add the weight of the laterally supported brick veneer (w_s). The percentage of grout-filled voids, V, is zero.

$$w = \left(A_{fs}\rho_m + (1 - A_{fs})\frac{V}{100}\rho_g \right)T + w_s$$
$$= \left(0.47\frac{95}{1728} + (1 - 0.47)\frac{0}{100}\frac{120}{1728} \right)7.63 + \left(\frac{120}{1728} \right)3.63$$
$$= 0.45 \text{ psi}$$

b. Covert the areal weight of wall to areal mass (m).

$$\text{m} = \frac{\text{w}}{g}$$
$$= \frac{0.45}{32.2(12)(1\text{x}10^{-6})} = 1165 psi\frac{ms^2}{in}$$

Step 11. Calculate the peak resistance from axial load arching r_a (Equation 6-13). Use X_e from Step 9 and w from Step 10.

$$r_a = \frac{8}{L^2}(T - 2X_E)\left(P + \frac{wL}{2} \right)$$
$$= \frac{8}{(120)^2}(7.63 - 2(0.07))\left(0 + \frac{(0.45)(120)}{2} \right) = 0.11 psi$$

Step 12. Construct the resistance-deflection curve for the wall (Figure 6-13 (+)).

This is shown below in Figure 6A-1b (+). This figure also shows a negative response region for the resistance-deflection curve, although it is acceptable to only model the inbound portion of the curve if the peak rebound resistance is assumed equal to the peak inbound resistance (as is typical). The rebound portion of the resistance-deflection curve is based on axial load arching without brittle flexural response since the wall is assumed to crack all the way through the thickness after peak flexural response (at deflections greater than X_e) during inbound response. The wall can be assumed to initially rebound with a stiffness equal to the initial flexural stiffness until the resistance becomes zero, and then to deflect with zero resistance until the deflection is negative and axial load arching can begin in the rebound direction as shown in Figure 6A-1b.

Step 13. Determine K_{LM} for each stiffness region of resistance-deflection curve Section 6-9.2).

a. Find the values of K for elastic and plastic response (Table 3-12 (+)).

Elastic K_{LM} = 0.78 (applicable for deflections not exceeding X_e)

Plastic K_{LM} = 0.66 (applicable for all larger deflections)

c. Assign the elastic and plastic K_{LM} to each stiffness region.

Response during the initial elastic stiffness has the elastic K_{LM}. All subsequent response occurs with the plastic K_{LM} as explained in Section 6-9.2.

Figure 6A-1b

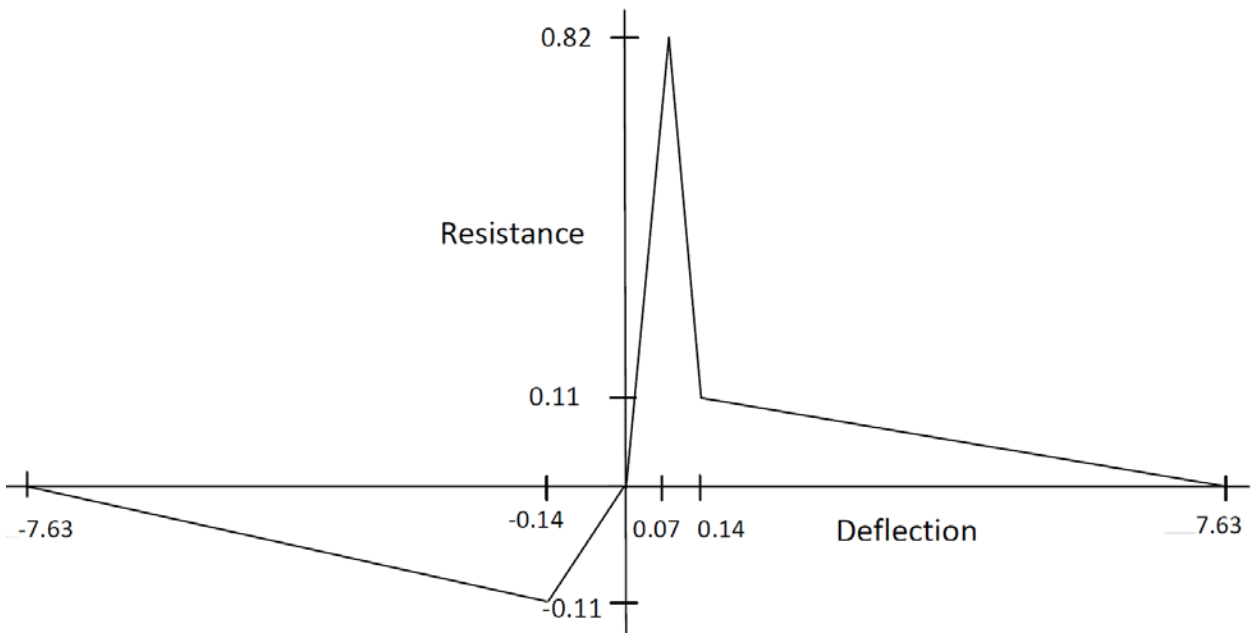

Step 14. Determine the natural period of vibration (Equation 3-60). Because most of the wall deflection from blast load is expected to exceed the very small yield deflection (X_e) of 0.07 inches, the plastic value of K_{LM} = 0.66 from Step 13a will be used to calculate the natural period for the wall.

$$T_N = 2\pi\,(K_{LM} m / K_E)^{1/2}$$

$$= 2\pi\,\{(0.66)(1165)/12.4\}^{1/2}$$

$$= 49 \text{ ms}$$

Step 15. Given the complex shape of the resistance-deflection function, a numerical integration procedure must be used to determine the wall deflection. This procedure is discussed in Section 3-19.2.1.1. The procedure calculates the wall's deflection in discrete time intervals. To ensure sufficient accuracy, these time intervals should be less than one-tenth of the wall's natural period. The time step should also be based on the type of numerical integration that is used. If a simplified integration

method is used, a smaller time step is needed to accurately model the large changes in slope in the resistance-deflection curve. In this case a simple constant velocity integration method was used, with a time step of 0.1 ms. The calculated deflection history of the wall is shown below. The same result was obtained when the time step was reduced by a factor of 2.

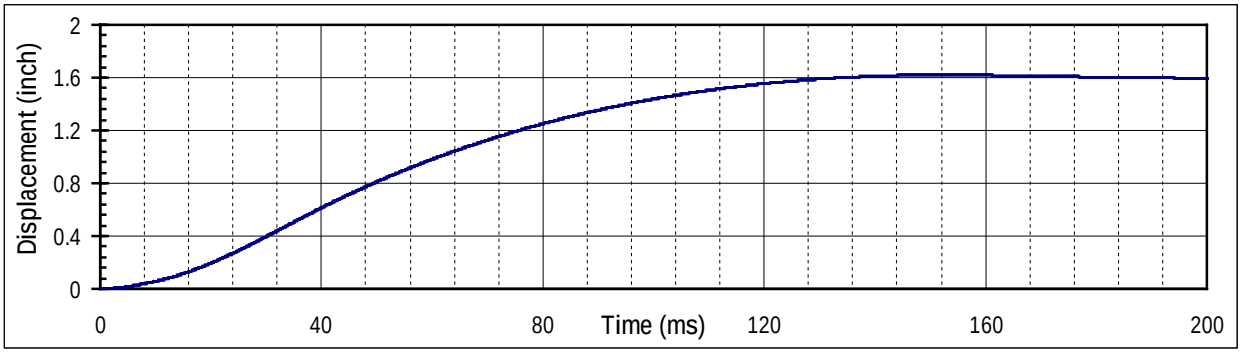

Step 16. Determine maximum deflection and check support rotation.

a. Determine maximum deflection from the calculated deflection history for the wall

X_m = 1.6 inches

b. Calculate support rotation (Table 3-5 (+))

$\Theta = \tan^{-1}(2X_m/L)$

$= \tan^{-1}(2 \times 1.6/120)$

$= 1.5°$

c. Compare the maximum support rotation with response criteria from Table 6-3 (+) for unreinforced walls with Protection Category 1

$\Theta = 1.5° \leq 1.5°$ O.K.

d. Compare the maximum deflection to wall thickness ratio with response criteria from Table 6-3 (+) for unreinforced walls with Protection Category 1

$X_m/T = 1.6/7.63 = 0.21 \leq 0.5$ O.K.

Step 17. Check wall shear strength

a. Calculate maximum shear force at distance d from support. This is the full wall thickness for an unreinforced wall.

$$V_{uo} = r_u\left(\frac{L}{2} - T\right)$$
$$= 0.82\left(\frac{120}{2} - 7.63\right)$$
$$= 43\,\text{lb/in}$$

b. Find shear area for out-of-plane shear (Equation 6-4a). The percentage of grout-filled voids *V* is zero.

$$A_{no} = \left(A_{fs} + (1 - A_{fs})\frac{V}{100}\right)T$$
$$= \left(0.47 + (1 - 0.47)\frac{0}{100}\right)(7.63)$$
$$= 3.6\text{in}^2/\text{in}$$

c. Calculate the out-of-plane shear strength (Equation 6-3)

$$V_{mo} = 2\sqrt{f'_m}A_n$$
$$= 2\sqrt{1300}(3.6)$$
$$= 260 lb/in \quad > \quad 43 lb/in$$

The shear strength exceeds the shear force – OK

Step 18. Design connections

a. Calculate the connection design load, which is equal to the ultimate shear force at the support. This will be used for the inbound and rebound design connection load. The calculated maximum resistance in rebound from the time-stepping SDOF analysis is less than r_u. However, a lesser blast load could cause a maximum inbound deflection less than X_e and the maximum rebound resistance could be nearly equal to r_u in this case.

$$V_u = \frac{r_u L}{2}$$
$$= \frac{0.82(120)}{2} = 49\,\text{lb/in}$$

b. Check the connection strength of the dowels at the bottom of the wall (Equation 6-8). A comparison of the dowel development length in the wall (24 inches) with the required length to develop the full dynamic yield strength of the #4 dowel bars per TMS 402/ACI

530/ASCE 5 (32 inches) shows that the dowels can develop 24/32 = 0.75, or 75%. of their dynamic yield strength. Note that the dynamic increase factor for shear reinforcing steel in Table 6-2 (+) is 1.0.

$$V_{dm} = 0.6A_{v\,d}f_{dy}$$
$$= 0.6(\frac{0.2in^2}{48in})(66000) = 165lb/in$$
$$= (165lb/in)0.75 = 124lb/in \quad > \quad 49lb/in$$

The direct shear strength of the dowels at the bottom support of the wall exceeds the connection design load – OK

c. The structural plans do not provide sufficient details on the connection of the roof diaphragm to the walls. The connection should be upgraded with a ledge angle that is connected to the roof deck with self-drilling screws and connected to the bond beam with drilled anchor bolts. The connections should be designed to resist a factored load of 49 lb/in using LRFD or an allowable load of 49 lb/in/1.7 = 29 lb/in.

Step 19. Check the response of the wall as a shear wall resisting the dynamic reaction at the top of the wall on the perpendicular side of the building to blast load. Since the building plan has a 3:1 aspect ratio (i.e. $L_2/L_1 = 3$), the in-plane shear can be calculated from as shown below using V_u in Step 18a.

a. Calculate in-plane shear force for the worst case shear wall.

$$V_{ui} = \frac{V_u L_2}{2L_1}$$
$$= \frac{49lb/in(3)}{2}$$
$$= 74\,\text{lb/in}$$

b. Find the in-plane shear area (Equation 6-4b). The face shell thickness t_s is shown in Table 6-1 (+).

$$A_{ni} = (K_v T + (1-K_v)2t_s)\frac{L_V}{L}$$
$$= (0(T) + (1-0)(2)(1.25))0.8$$
$$= 2.0in^2/in$$

c. Compute the in-plane shear strength (Equation 6-3).

$$V_{mi} = 2\sqrt{f'_m}A_{ni}$$
$$= 2\sqrt{1300}(2.0)$$
$$= 144 lb/in$$

d. Check that the interaction equation for in-plane and out-of-plane shear is satisfied (Equation 6-7). Note that V_{so} and V_{si} are the in-plane and out-of-plane shear forces, respectively, resisted by shear reinforcement, which are both equal to zero in this case (i.e. wall has no shear reinforcement).

$$\left(\frac{V_{uo}}{V_{mo}+V_{so}}\right)^2 + \left(\frac{V_{ui}}{V_{mi}+V_{si}}\right)^2 \le 1.0$$

$$\left(\frac{43}{260+0}\right)^2 + \left(\frac{74}{144+0}\right)^2 = 0.29 \le 1.0$$

The combined effect of in-plane and out-of-plane shear stress satisfy the interaction formula – OK.

/1/

PROBLEM 6A-2 DESIGN OF PRESTRESSED PRECAST ROOF BEAM

Problem: Design a prestressed precast roof beam for a given blast load.

Procedure:

Step 1. Establish design parameters.

a. Pressure-time loading

b. Material strength

c. Span length

d. Static loads

e. Deflection criteria

Step 2. Select a standard precast section from the PCI Design Handbook or manufacturer's catalogs. Also select a standard strand pattern.

Step 3. Determine dynamic increase factors for concrete and reinforcement from Section 6-12. Increase the static design stress of the reinforcing bars and welded wire fabric 10 percent for the average yield stress. Calculate the dynamic design stresses using the above DIF and the static stresses.

Step 4. From Chapter 4 and a unit weight of concrete equal to 150 pcf, calculate the modulus of elasticity for concrete. With the above modulus for concrete and those for reinforcing bars and prestressing tendons, calculate the modular ratio.

NOTE: If the section has a flange (e.g. a single or double tee section) it must be designed according to the principles of Chapter 4. The flange is a one-way, non-prestressed slab spanning between webs. The critical section is usually a cantilever.

Step 5. Calculate the properties of the section.

a. Gross area

b. Gross moment of inertia

c. Unit weight

d. Distance from extreme compression fiber to the centroid of the prestressing tendon, d_p

e. Area of prestressing tendons

f. Prestressed reinforcement ratio (Equation 6-17)

Step 6. Given the type of prestressing tendon, determine γ_p. Using the dynamic concrete stress from Step 3, calculate $ß$. Using Equation 6-21, 6-22 or 6-23 and the values of γ_p and $ß_1$ from above, calculate the average stress in the prestressing tendon.

Step 7. With the reinforcement ratio from Step 5e, the average stress in the prestressing tendon and the value of $ß_1$ from Step 6, and the dynamic strength of materials from Step 3, check that reinforcement ratios are less than the maximum permitted by Equation 6-24 or 6-25.

Step 8. Using the area of reinforcement and the value of d_p from Step 5, the dynamic stresses of Step 3, and the average stress in the prestressing tendon from Step 6, calculate the moment capacity of the element (Equations 6-14 and 6-15).

Step 9. With the equations of Table 3-1 (+) and the moment capacity of Step 8, calculate the ultimate unit resistance. As precast buildings are only subject to low blast pressures, the static loads become significant. To determine the resistance available to resist the blast load, subtract the static dead and live loads from the ultimate unit resistance.

Step 10. Calculate the moment of inertia of the cracked section I_c, using Equation 6-27, the modular ratio from Step 4 and the area of prestressing tendons, the value of d_p and the prestressed reinforcement ratio from Step 5. Using this value of I_c and the gross moment of inertia of Step 5b, find the average moment of inertia from Equation 6-26.

Step 11. Using the equations of Table 3-8 (+), the modulus of elasticity for concrete from Step 4 and the average moment of inertia from Step 10, calculate the elastic stiffness of the section.

Step 12. Determine the load-mass factor K_{LM}, in the elastic range for the appropriate loading condition from Table 3-12 (+). Also, calculate the unit mass of the section and multiply it by K_{LM} to obtain the effective unit mass of the element.

Step 13. With Equation 3-54, the effective mass from Step 12 and the elastic stiffness from Step 11, calculate the natural period of vibration T_N, of the section.

Step 14. Determine the response chart parameters.

a. Duration of load T (Step 1)

b. Natural period of vibration T_N (Step 13).

Calculate the ratio T/T_N and using this ratio, determine the dynamic load factor DLF from Figures 3-49 (+) through 3-53 (+). Section must remain

elastic, and hence the actual resistance obtained by the element (which is equal to the peak dynamic load from Step 1 multiplied by the *DLF*) must be less than the resistance available.

If the section does not remain elastic Steps 1 through 14 must be repeated.

NOTE: For bilinear loads, calculate the ratio of the peak dynamic load P to the resistance available. Using P/r_u and the value of T/T_N calculated above, enter the appropriate response chart (Figures 3-64 (+/+) through 3-266 (+/+/+)) and find the ductility ratio X_m/X_E. For the section to remain elastic the ductility ratio must be less than or equal to one.

Step 15. Calculate the deflection of the element X_m by adding the dead and live loads (Step 1), and the resistance obtained by the structure (Step 14) and dividing by the elastic stiffness (Step 11). Using the deflection and the equations of Table 3-5 (+), determine the support rotation. Compare the rotation with deflection criteria of Step 1e. If comparison is satisfactory continue with Step 16. If comparison is not satisfactory repeat Steps 1 through 15.

Step 16. Calculate the elastic deflection X_m from Equation 3-30, using the ultimate resistance of Step 9 and the elastic stiffness of Step 11. Then calculate the ductility ratio X_m/X_E using the value of X_m from Step 15. With the ductility ratio and the ratio T/T_N from Step 14, enter Figure 3-268 (+) and find the percentage of rebound. Extrapolate if necessary.

Step 17. Find the required rebound resistance by multiplying the ultimate unit resistance by the ratio from Step 16 and subtracting the dead load. In no case should the required rebound resistance be less than half the resistance available during the loading phase. With equations of Table 3-1 (+) and the required rebound resistance, find the required rebound moment capacity.

Step 18. Calculate an approximate value of d^- and the amount of concrete strength available for rebound (Equation 6-29). Assume a depth of the equivalent rectangular stress block and, by a trial and error method, using Equation 6-34 find the area of rebound reinforcement required. Check that the amount of reinforcement does not exceed the maximum permitted by Equation 6-30 or 6-31.

Step 19. Calculate the shear stress at d_p away from the support. Also calculate the allowable shear stress on an unreinforced web using the dynamic design stress (Step 16). Design the shear reinforcement.

Step 20. Calculate the shear at the support V_d from the equations of Table 3-9 (+) and the value of the total load. Calculate the maximum allowable direct shear using the dynamic concrete strength.

Compare the allowable shear with V_d. If V_d is greater than the size of the section must be increased.

Step 21. Check if section is adequate for service loads using the PCI Design Handbook and the ACI Code.

EXAMPLE 6A-2 DESIGN OF A PRESTRESSED PRECAST ROOF BEAM

Required: **Design a prestressed precast roof beam subject to a blast load. Use a double tee section.**

Solution:

Step 1. Given:

a. Pressure-time loading (Figure 6A-2 (+)).

b. Material strengths

Concrete:	f'_c	=	5000 psi
Prestressing Steel:	f_{pu}	=	270,000 psi
	f_{py}/f_{pu}	=	0.85
Welded Wire Fabric	f_y	=	65,000 psi
Reinforcing Bars	f_y	=	60,000 psi

c. Span length is 40 ft = 480 in

d. Live load is 15 psf

e. Maximum ductility ratio < 1.0

Maximum support rotation < 2°

Step 2. Select a double tee section and strand pattern.

Try 8DT24 (Figure 6A-2 (+))

Section properties from PCI Design Handbook:

A = 401 in^2 y_t = 6.85 in

I = 20,985 in^2 w = 418 lb/ft

Try strand pattern 48-S, two 1/2 inch diameter straight strands in each tee.

Area of each strand = 0.153 in^2

e = 14.15 in

Figure 6A-2

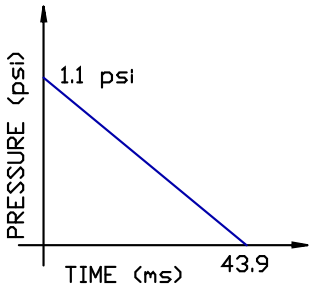

(a)

PRESSURE-TIME LOADING

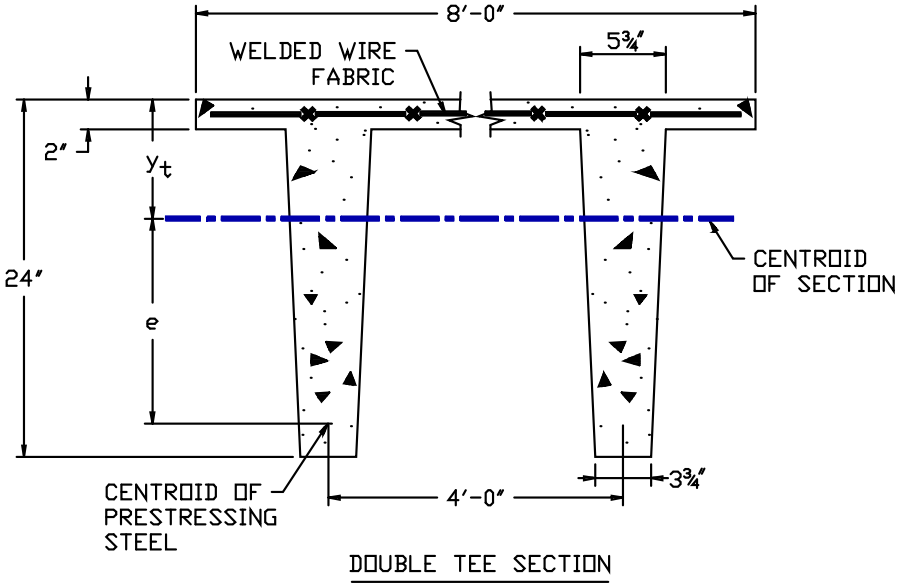

DOUBLE TEE SECTION

(b)

Step 3. Determine design stresses. (From Section 6-12)

a. Dynamic Increase Factors

Concrete flexure:	1.19
Concrete diagonal tension:	1.00
Concrete direct shear:	1.10
Prestressing Steel:	1.00
Welding Wire Fabric:	1.10
Reinforcing Steel flexure:	1.17

Reinforcing Steel shear: 1.00

b. Dynamic strengths

Concrete

- flexure: $f'_{dc} = 1.19 \times 5{,}000 = 5950$ psi
- diagonal tension: $f'_{dc} = 1.0 \times 5{,}000 = 5000$ psi
- direct shear: $f'_{dc} = 1.1 \times 5{,}000 = 5500$ psi

Prestressing Steel: $f_{dy} = 1.0 \times 270{,}000 = 270{,}000$ psi

Welded Wire Fabric: $f_{dy} = 1.10 \times 1.10 \times 65{,}000 = 78{,}650$ psi

Reinforcing Bars

- flexure: $f_{dy} = 1.17 \times 1.10 \times 60{,}000 = 77{,}220$ psi
- shear: $f_{dy} = 1.0 \times 1.10 \times 60{,}000 = 66{,}000$ psi

Step 4. Calculate modulus of elasticity and modular ratio.

a. Concrete

$$E_c = 33 w_c^{1.5} (f'_c)^{1/2}$$
$$= 33(150)^{1.5}(5000)^{1/2}$$
$$= 4.29 \times 10^6 \text{ psi}$$

b. Steel

$$E_s = 29.0 \times 10^6 \text{ psi}$$

$$n = \frac{E_s}{E_c} = \frac{29.0 \times 10^6}{4.29 \times 10^6} = 6.76$$

NOTE: The flange is designed in accordance with the principles of Chapter 4. Considering the flange a one-way non-prestressed slab, the cantilever portion was found to be critical. In order to remain elastic the flange thickness must be increased to 3 inches. The reinforcement is two layers of welded wire fabric; 6×6 - W1.4×W2.0 in the top and 6×6 - W1.4×W1.4 in the bottom.

Step 5. Calculate the section properties of the double tee with a 3 inch flange.

a. new $A = 497$ in^2

b. new $y_t = 6.43$ in

new I_g = 25180 in^4

c. $w = 497 \times 150$ pcf/12^3 = 43.1 lb/in

d. d_p = 7.85 + 14.15 = 22.0 in

e. $A_{ps} = 4 \times 0.153 = 0.612$ in^2

f. Prestressed reinforcement ratio (Equation 6-17)

$p_p = A_{ps}/bd_p = 0.612/(96 \times 22.0) = 0.000290$

Step 6. Determine the average stress in the prestressing tendon.

a. $f_{py}/f_{pu} = 0.85$ so $\gamma_p = 0.40$

b. $ß_1 = 0.85 - 0.05(5950-4000)/1000 = 0.7525$

c. Average stress (Equation 6-21)

$$f_{ps} = f_{pu}\left[1 - \frac{\gamma_p p_p f_{pu}}{\beta_1 f'_{dc}}\right]$$
$$= 270{,}000\left[1 - \frac{0.40 \times 0.000290 \times 270{,}000}{0.7525 \times 5950}\right]$$
$$= 268{,}111 \text{ psi}$$

Step 7. Check maximum reinforcement ratio (Equation 6-24).

$p_p f_{ps}/f'_{dc} \leq 0.36\, ß_1$

$p_p f_{ps}/f'_{dc} = 0.000290 \times 268{,}111/5950 = 0.0131$

$0.36\, ß_1 = 0.36 \times 0.7525 = 0.2709 > 0.0131$ O.K.

Step 8. Calculate moment capacity of beam.

From Equation 6-15

$$a = \frac{A_{ps} f_{ps}}{0.85 f'_{dc} b} = \frac{0.612 \times 268{,}111}{0.85 \times 5950 \times 96} = 0.34 \text{ in}$$

$c = a/ß_1 = 0.34/0.7525 = 0.45 < 3.0$ inch thick flange

Hence the neutral axis is within the flange and the section can be analyzed as a rectangular section. If the neutral axis had extended into the web, a strain compatibility analysis would be required.

From Equation 6-14

$M_u = A_{ps} f_{ps} (d_p - a/2)$

$= 0.612 \times 268.111 (22.0 - 0.34/2)$

$M_u = 3582$ k-in

Step 9. Find the resistance available to resist blast load.

a. Find the ultimate resistance (Table 3-1 (+))

$r_u = 8M_u / L^2$

$= 8 \times 3582/480^2 = 0.124$ k/in

$= 124$ lbs/in

b. Resistance available for blast load

$r_{avail} = r_u - DL - LL$

$= 124 - 43.1 - (15 \text{ psf} \times 8 \text{ ft}/12)$

$= 124 - 43.1 - 10.0$

$= 70.9$ lb/in

Step 10. Determine the average moment of inertia.

a. Moment of inertia of cracked section (Equation 6-27)

$I_c = nA_{ps} d_p^2 [1-(p)^{1/2}]$

$= 6.76 \times 0.612(22.0)^2 \; [1-(0.00029)^{1/2}] = 1970 \text{ in}^4$

b. Average moment of inertia (Equation 6-26)

$I_a = (I_g + I_c)/2$

$= (25180 + 1970)/2 \quad = 13575 \text{ in}^4$

Step 11. Using equations of Table 3-8 (+), calculate the elastic stiffness.

$$K_E = \frac{384 E_c I_a}{5L^4} = \frac{384 \times 4.29 \times 10^6 \times 13575}{5 \times 480^4}$$

$$= 84.25 \text{ lb/in/in}$$

Step 12. Calculate the effective mass.

a. Load-mass factor (Table 3-12 (+))

In the elastic range

$K_{LM} = 0.78$

b. Unit mass

$m = w/g = 43.1/(32.2 \times 12)$

$= 0.1116$ lb-s^2/in^2

$= 11.16 \times 10^4$ lb-ms^2/in^2

c. Effective mass

$m_e = K_{LM}\, m$

$= 0.78 \times 11.16 \times 10^4$

$= 8.70 \times 10^4$ lb-ms^2/in^2

Step 13. Calculate the natural period of vibration (Equation 3-54).

$T_N = 2\pi\, (m_e/K_E)^{1/2}$

$= 2\pi\, (8.70 \times 10^4/84.25)^{1/2} = 201.9$ ms

Step 14. Determine response of beam.

T = duration of load = 43.9 ms (Step 1a)

T_N = natural period = 201.9 ms (Step 13)

$T/T_N = 43.9/201.9 = 0.217$

From Figure 3-49 (+), $DLF = 0.65$

Actual resistance obtained $r = DLF \times P \leq r_{avail}$

P = peak dynamic load

= 1.1 psi (Step 1a)

$r = 0.65 \times (1.1 \times 96)$

= 68.4 lb/in < 70.9 lb/in (r_{avail}, Step 9) O.K.

Step 15. Check rotation.

a. Total load on beam = ($DLF \times p$) + DL + LL

= 68.4 + 43.1 + 10.0

= 121.5 lb/in

b. Maximum deflection

X_m = (121.5 lb/in)/K_E

= 121.5/84.25

= 1.44 in

c. Support rotation (Table 3-5 (+))

$\Theta = \tan^{-1}(2X_m/L)$

$= \tan^{-1}(2 \times 1.44/480)$

= 0.34° < 2° O.K.

Step 16. Calculate percent of rebound.

a. Calculate elastic deflection (Equation 3-30)

$X_E = r_u/K_E$

= 124/84.25

= 1.47 in

b. Calculate ductility ratio

$\mu = X_m/X_E$

= 1.44/1.47

= 0.98

c. Find percent of rebound from Figure 3-268 (+)

X_m/X_E = 0.98 and T/T_N = 0.216

r^-/r = 1.0

so, 100 percent rebound

Step 17. Determine required rebound moment capacity.

a. Required rebound resistance

$r_{req}^{-} = r^{-} - DL > r_{avail}/2$

= 68.4 - 43.1

= 25.3 lb/in

$r_{avail}/2$ = 70.9/2 = 35.4 > 25.3 lb/in

Use 35.4 lb/in or considering a single tee

r_{req}^{-} = 17.7 lb/in

b. Required moment capacity (Table 3-1 (+))

$M_u^{-} = r_{req}^{-} L^2/8$

$= 17.7 \times 480^2/8$

M_u^{-} = 509,760 in-lb/stem

Step 18. Determine rebound reinforcement.

a. Approximate value of d^{-}

$d^{-} = h - cover - \Phi_{wire} - \Phi_{tie} - (\Phi_{bar}/2)$

= 25 - 0.625 - 0.135 - 0.375 - 0.5/2

= 23.62 in

b. Rebound concrete strength

$f = 0.47f'_{dc} = 0.47 \times 5950 = 2796.5$ psi

c. Required rebound reinforcement

Assume a = 2.0 in

$A_s^{-} = M_u^{-}/[f_{dy}(d^{-} - a/2)]$ (Equation 6-28)

$= 509{,}760/[77{,}220(23.62 - 2.0/2)] = 0.29 \text{ in}^2$

$$a = \frac{A_s^- f_{dy}}{0.47 f'_{dc} b}$$

$$= \frac{0.29 \times 77{,}200}{2796.5 \times 3.75} = 2.1\,\text{in} \approx 2.0\,\text{in} \quad \text{O.K.}$$

Use 2 No. 4 bars in each stem

$A_s^- = 0.40\ \text{in}^2$

d. Check maximum reinforcement (Equation 6-30)

$$A_s \le \frac{0.47 f'_{dc} \beta_1}{f_{dy}} \left[\frac{87{,}000 - 0.378 n f'_{dc}}{87{,}000 - 0.378 n f'_{dc} + f_{dy}} \right] b d^-$$

$$= \frac{2796.5 \times 0.7525}{77{,}220} \left[\frac{87{,}000 - 0.378 \times 6.76 \times 5950}{87{,}000 - 0.378 \times 6.76 \times 5950 + 77{,}220} \right]$$

$$\times 3.75 \times 23.62$$

$$= 1.16\ \text{in}^2 > 0.40\ \text{in}^2 \qquad \text{O.K.}$$

Step 19. Design the shear reinforcement.

a. Calculate shear at distance d_p from support

$v_u = r(L/2 - d_p)/b_w d_p$

r = 121.5 lb/in (total load on beam, Step 15a)

$v_u = 121.5\ (480/2 - 22.0)/(2 \times 4.75 \times 22.0) = 127$ psi

b. Maximum allowable shear stress

$10\ (f'_c)^{1/2} = 10 \times (5000)^{1/2}$

$= 707$ psi > 127 psi O.K.

c. Allowable shear stress on unreinforced web

$v_c = 1.9(f'_c)^{1/2} + 2500 p_p \le 2.28(f'_c)^{1/2}$

$$= 1.9 \times 5000^{1/2} + 2500 \frac{0.612}{2 \times 4.75 \times 22} = 142\,\text{psi}$$

$2.28(f'_c)^{1/2} = 2.28(5000)^{1/2}$

$= 161$ psi > 142 psi O.K.

d. Excess shear

$v_u - v_c \leq v_c$

$v_u - v_c = 127 - 142 = -15$ psi

so, use v_c

e. Shear reinforcement

Assume #3 closed ties

$A_v = 2 \times 0.11 = 0.22 \text{ in}^2$

$$s_s = \frac{A_v \Phi f_y}{v_c b} = \frac{0.22 \times 0.85 \times 66{,}000}{142 \times 4.75}$$

$$= 18.3 \text{ in}$$

f. Check maximum spacing and minimum required reinforcement

$s \leq d_p/2 = 22.0/2 = 11.0$ in

$A_v \leq 0.0015 b s_s$

$= 0.0015 \times 4.75 \times 11.0 \quad = 0.08 \text{ in}^2 > 0.22 \text{ in}^2$

Shear reinforcement is thus #3 ties at 11 inches in both stems.

Step 20. Check direct shear.

a. Calculate shear at the support (Table 3-9 (+))

$V_d = rL/2$

$= 121.5 \times 480/2$

$= 29{,}160$ lbs

b. Calculate allowable direct shear

$V_d \leq 0.18 f'_c bd$

$= 0.18 \times 5{,}500 \times (2 \times 4.75) \times 22.0$

$= 206{,}910$ lbs > 29,160 lbs O.K.

Step 21. Check section for conventional loads.

This section as designed for blast loads is shown in Figure 6A-3 (+). Using the PCI Design Handbook and the latest ACI code, the section must be checked to make sure it is adequate for service loads.

Figure 6A-3

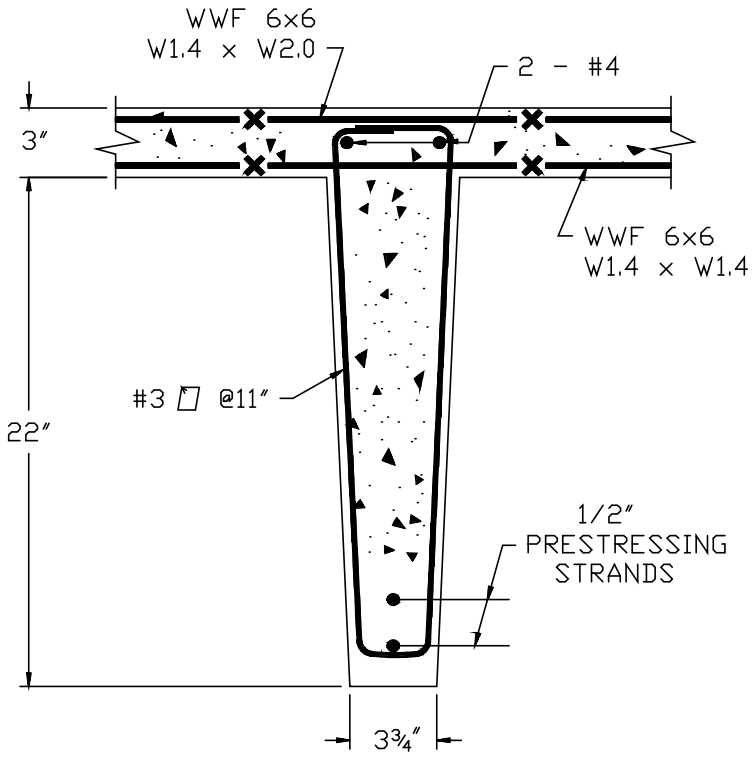
WWF 6×6
W1.4 × W2.0
2 - #4
3″
WWF 6×6
W1.4 × W1.4
#3 @11″
22″
1/2″
PRESTRESSING
STRANDS
3¾″

PROBLEM 6A-3 DESIGN OF WINDOWS

Problem: **Determine the minimum thickness of glazing to resist a given blast load, and the design loads for the framing.**

Procedure:

Step 1. Establish design parameters.

a. Pressure-time loading

b. Dimensions of pane(s)

c. Type of glazing

Step 2. Calculate aspect ratio of pane.

Step 3. With the parameters of Steps 1 and 2, enter Figures 6-28 (+/+) to 6-42 (+/+) to determine which one applies. Using the peak pressure of the dynamic load, its duration and the dimensions of the pane, determine the minimum required glazing thickness.

NOTE: If given window geometry differs from chart parameters, interpolation as outlined in Section 6-28.4 may be required.

Step 4. Find the static ultimate resistance r_u of the glazing from Table 6-7 (+/+/+/+/+/+/+) for the given aspect ratio, the short dimension and the thickness of the glazing (interpolate if required).

Step 5. From Table 6-10 (+) and the aspect ratio determine the design coefficients C_R, C_X and C_Y for the window frame loading. With these coefficients, the dimensions of the pane from Step 1b, the static ultimate resistance of Step 4 and Equation 6-49, calculate the uplift force in each corner. Then using Equations 6-47 and 6-48 calculate the design loads along the long and short spans of the pane. Finally from Table 6-12 (+/+/+/+/+/+/+), determine the fundamental period, T_N, and check for rebound requirements in accordance with Section 6-30.4

EXAMPLE 6A-3 DESIGN OF WINDOWS

Required: **Find the minimum glazing thickness and the design loads on the frame of a non-openable window consisting of four equal size panes of glass.**

Solution:

Step 1. Given:

a. Pressure-time loading (Figure 6A-4 (+))

b. Each pane is 37.5 inches long by 30 inches high

c. The glazing is heat-treated tempered glass meeting Federal Specification DO-G-1403B and ANSI Z97.1-1984

Figure 6A-4

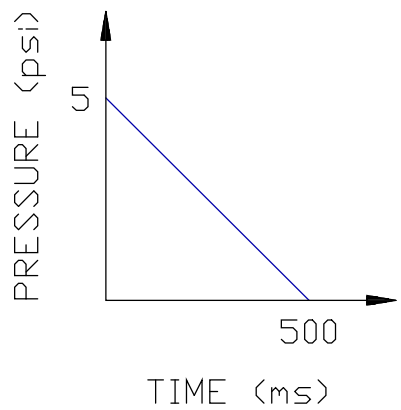

Step 2. Calculate aspect ratio.

a/b = 37.5/30 = 1.25

Step 3. Determine minimum glazing thickness.

a. For a/b = 1.25 and tempered glass use Figure 6-36 (+/+)

b. From Figure 6-36, t = 3/4 inch

Step 4. Find static ultimate resistance r_u (Table 6-7 (+/+/+/+/+/+/+)).

r_u = 24.6 psi

The window frame must be designed to safely support, without undue deflections, a static uniform load of 24.6 psi applied normal to both the glazing and the exposed frame members.

Step 5. Compute design loads on the window frame.

Note: The exposed surface width of the frame is 2 inches.

a. Determine design coefficients from Table 6-10 (+), interpolating for a/b = 1.25.

$C_R = 0.077$

$C_x = 0.545$

$C_y = 0.543$

b. Calculate the unit shear along the long span of the frame (Equation 6-47)

$V_x = C_x r_u b \sin(\pi x/a) + r_u w$

$= 0.545 \times 24.6 \times 30 \sin(\pi x/37.5) + 24.6 \times 2$

$= 402 \sin(\pi x/372.5) + 49.2$ lb/in

c. Calculate the unit shear along the short span of the frame (Equation 6-48)

$V_y = C_y r_u b \sin(\pi y/b) + r_u w$

$= 0.543 \times 24.6 \times 30 \sin(\pi y/30) + 24.6 \times 2$

$= 400 \sin(\pi y/18) + 49.2$ lb/in

d. Calculate the uplift force at the corners of the panes (Equation 6-49)

$R = -C_R r_u b^2$

$= - 0.077 \times 24.6 \times 30^2$

$= - 1705$ lbs

Distribution of the design load of the pane on the frame is shown in Figure 6-55 (+).

e. From Table 6-12 (+/+/+/+/+/+/+), T_N = 8.74 msec, T/T_N = 500/8.74 = 57.2

Since $T/T_N = 57.2 \geq 10$, design for rebound is not necessary.

PROBLEM 6A-4 DESIGN OF SHOCK ISOLATION SYSTEM

Problem: Design an overhead pendulum shock isolation system using a platform for a given loading.

Step 1. Establish design parameters.

a. Structural configuration

b. Magnitude and location of loads on platform

c. Shock spectra for horizontal and vertical motion

d. Maximum allowable motion

Step 2. Compute member sizes of platform.

Step 3. Compute center of gravity of the loads (live and dead) on platform.

Step 4. Compute the elastic center of the spring supporting system.

Step 5. Determine the required weight and location of ballast to balance the system (i.e. to move the center of gravity of loads to coincide with the elastic center of the spring supporting system).

Step 6. Compute the total weight of the isolation system. Additional ballast equal to 25% of the weight of the equipment and ballast from Step 5 is added to provide for future changes in equipment. Also determine the equivalent uniform load equal to the total load divided by the area of the platform.

Step 7. Determine the natural frequency of the individual members of the platform (using the equivalent uniform load computed in Step 6). The natural frequency is

$$f = \frac{9.87}{2\pi} = \frac{EI_g}{wL^4}$$

for a simply supported beam with a uniform load.

Step 8. Using the shock spectrum for vertical motion, determine the required frequency of the system that will reduce the input accelerations to the maximum allowable. In addition, determine the displacement at this frequency.

Step 9. Verify rigid body motion of the platform.

The natural frequency of the individual members of the platform should be at least 5 times greater than the natural frequency of the system for rigid body motion of the platform to occur.

To increase the frequency of the individual members, increase member sizes, and repeat Steps 3 through 7.

Step 10. Determine the natural frequency for horizontal motion (pendulum action) of the platform where

$$f_{horizontal\ motion} = 1/2\pi\ (386.4/L)^{1/2} \qquad (6\text{-}56)$$

where L is the suspended length.

Step 11. Verify that dynamic coupling will not occur between vertical and horizontal motions. According to Section 6-47.3.2 dynamic coupling will not occur if

$$f_{horizontal\ motion} < 1/2\ f_{\text{vertical motion}}$$

Step 12. From the shock spectra for horizontal motion, determine the maximum dynamic displacement, velocity and acceleration using the frequency computed in Step 10.

Verify that the maximum acceleration is less than the allowable.

Step 13. Compute the load in each spring.

$$\text{Load in each spring} = \frac{\text{Total Load}}{\text{Number of Springs}}$$

Step 14. Determine stiffness of springs to produce the required frequency of the system. Compute the static and maximum displacement. Using the static displacement and the load in each spring from Step 13, calculate the required spring stiffness K from,

$$K = \frac{\text{Load in each spring}}{\text{Static displacement}}$$

Or using the vertical frequency from Step 8, and the mass on each spring the stiffness can be calculated from

$$K = [2\pi\ f_{vert}]\ m^2$$

In addition, compute the travel of the spring according to Section 6-48.2, i.e.

$$\text{travel} = \frac{\text{Maximum displacement}}{0.85}$$

EXAMPLE 6A-4 DESIGN SHOCK ISOLATION SYSTEM

Required: Design an overhead pendulum shock isolation system using a platform for a given loading.

Step 1. Given:

a. Structural configuration shown in Figure 6A-5 (+)

Figure 6A-5

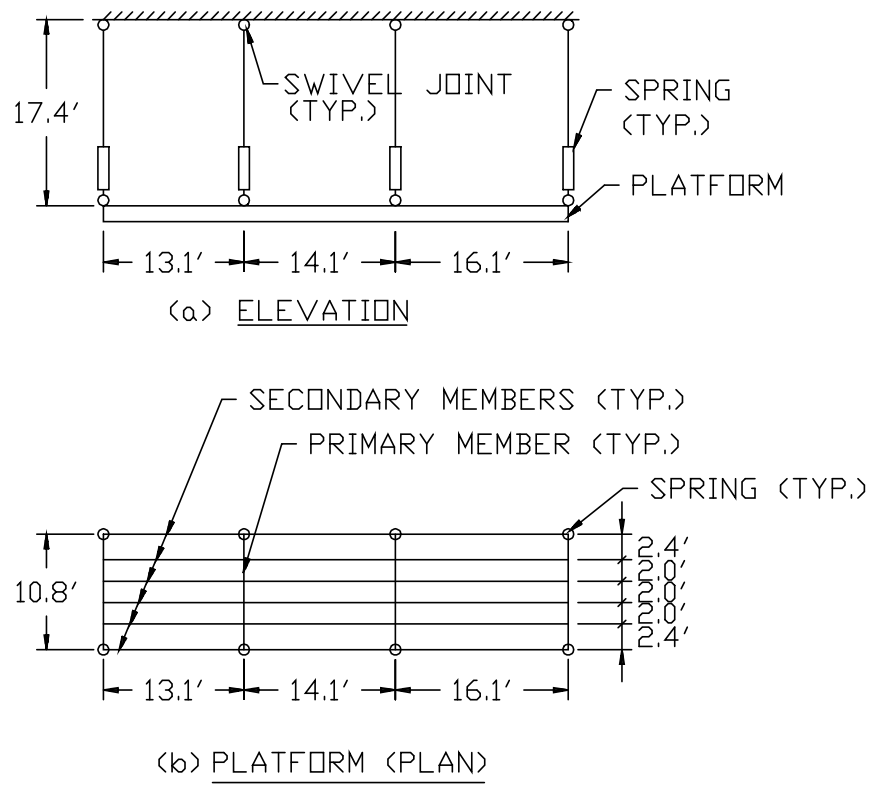

b. Magnitude and location of loads on platform (Figure 6A-6 (+))

Equipment: E_1 = 4960 lbs

E_2 = 4960 lbs

E_3 = 4960 lbs

Floor panel = 5.5 psf (covers the whole area of platform)

Grating = 7.2 psf

Live load = 150 psf

Figure 6A-6

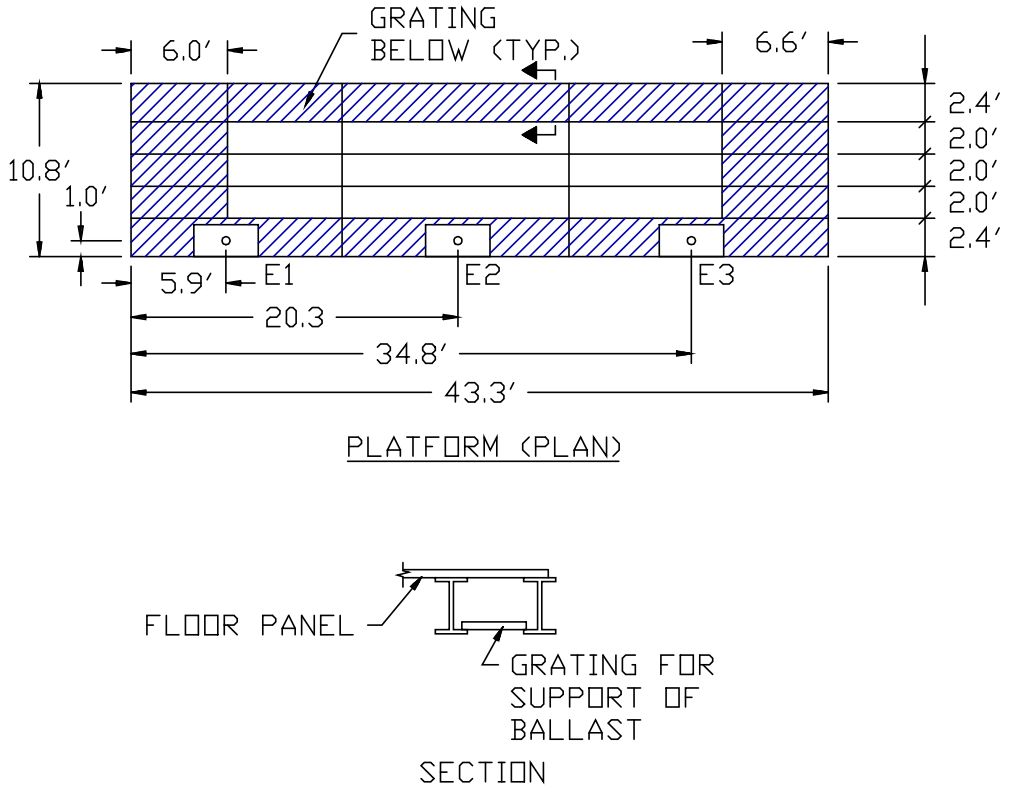

c. Shock spectra for horizontal and vertical motions are given in Figure 6A-7 (+)

d. Maximum allowable acceleration

Vertical Motion = 0.50g

Horizontal Motion = 0.75g

Figure 6A-7

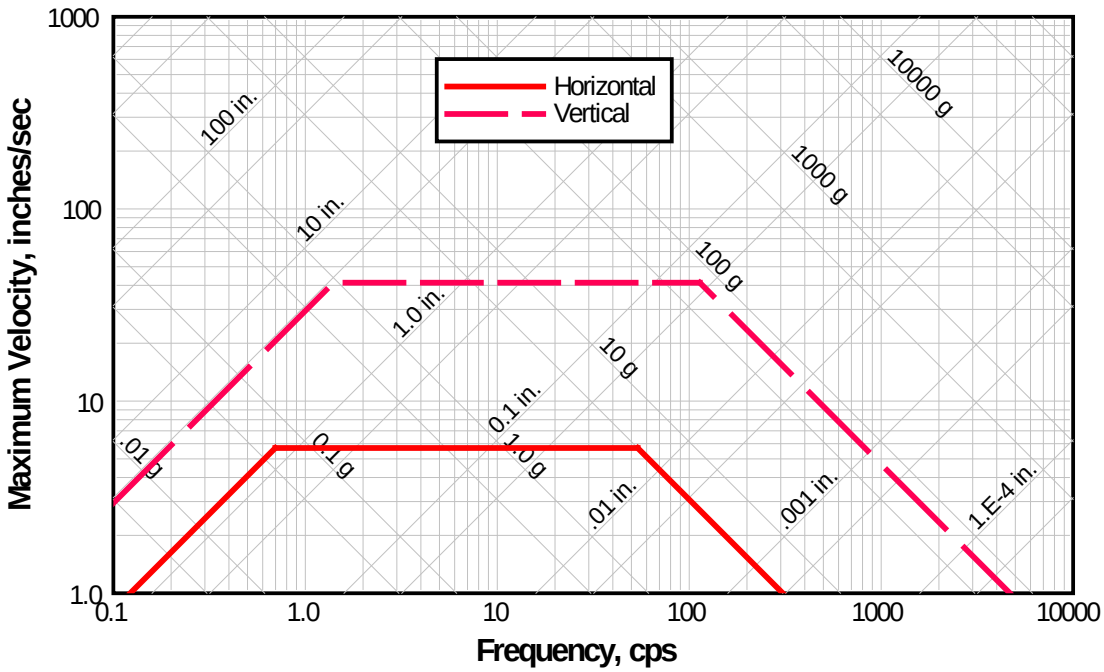

Step 2. Member sizes

Design Loads:

Dead load = 20 psf (assume)

Live Load = 150 psf

Primary Member (a): See Figure 6A-5a (+).

$w = 170 \times (7.05 + 8.05) = 2567$ lbs/ft

Maximum Bending moment = $(wL^2)/8$ (at center)

$= (2567 \times 10.8^2) / 8$

= 37427 lb-ft

Using allowable stress design,

Allowable bending stress = 0.66 x F_y (for compact shapes AISC).

$$\text{so, Required } S_x = \frac{\text{Maximum Bending Moment}}{\text{Allowable Bending Stress}}$$
$$= (37427 \times 12) / (0.66 \times 36{,}000)$$
$$= 18.9 \text{ in}^3$$

Try section W10x21,

S_x = 21.5 in^3 > 18.9 in^3 O.K.

Check deflection:

$$\text{Maximum allowable deflection} = \frac{L}{360} = \frac{10.8 \times 12}{360} = 0.36 \text{ in}$$

Maximum deflection = $(5wL^4) / 384EI$ (at center)

For W10 × 21,

I = 107 in^4

$$\text{Maximum deflection} = \frac{5 \times (2567/12) \times (10.8 \times 12)^4}{384 \times 29{,}000 \times 10^3 \times 107}$$

= 0.25 in < 0.36 in O.K.

So, use W10 × 21 for all primary members.

Secondary Member (b): See Figure 6A-5a (+).

w = 170 (1.0 + 1.2) = 374 lb/ft

Maximum Bending moment = $(wL^2) / 8$ (at center)

= $(374 \times 16.1^2)/8$ = 12,118 lb-ft

Using allowable stress design,

Allowable bending stress = 0.66 F_y (for compact shapes, AISC).

$$\text{so, Required } S_x = \frac{12118 \times 12}{0.66 \times 36{,}000} = 6.12 \text{ in}^3$$

Try section W8 × 13,

S_x = 9.90 in^3 > 6.12 in^3 O.K.

Check deflection:

$$\text{Maximum allowable deflection} = \frac{L}{360}$$
$$= \frac{16.1 \times 12}{360}$$
$$= 0.54 \text{ in}$$

For W8 × 13, $I = 39.6 \text{ in}^4$

$$\textit{Maximum deflection} = \frac{5\,w\,L^4}{384EI}$$
$$= \frac{5 \times (374/12) \times (16.1 \times 12)^4}{384 \times 29{,}000 \times 10^3 \times 39.6}$$
$$= 0.49 < 0.54 \qquad \textit{O.K.}$$

So, use W8×13 for all secondary members.

NOTE: Members should be checked for concentrated equipment loads.

Step 3. Find center of gravity of the loads on the platform (see Figure 6A-8 (+)).

Center of gravity of loads (dead + live) = $\{\overline{X}_1, \overline{Y}_1\}$

$$\text{Then, } \overline{X}_1 = \frac{\Sigma W_1 X}{\Sigma W_1}$$
$$= \frac{484{,}540}{23751.4}$$
$$= 20.4 \text{ ft}$$
$$\overline{Y}_1 = \frac{\Sigma W_1 Y}{\Sigma W_1}$$
$$= \frac{62{,}786.7}{23{,}751.4}$$
$$= 2.64 \text{ ft}$$

Figure 6A-8

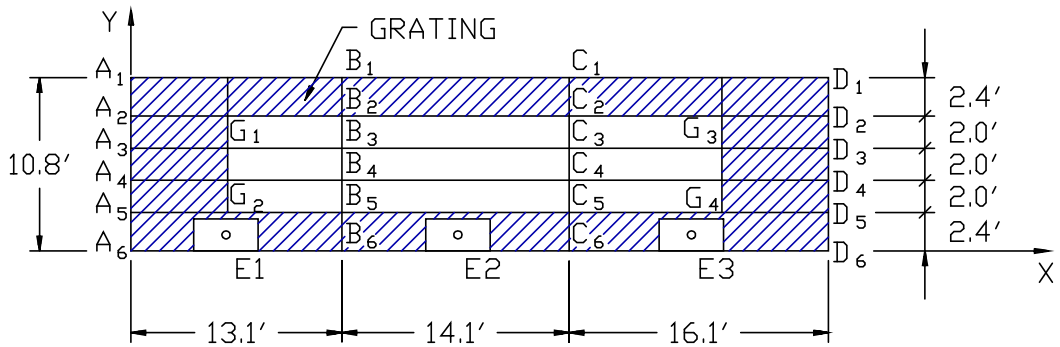

Item	Weight W_1 (lbs)	X (ft)	Y (ft)	W_1X (lb-ft)	W_1Y (lb-ft)
$A_1A_2...A_6$	226.8	0.0	5.4	0.0	1224.7
$B_1B_2...B_6$	226.8	13.1	5.4	2971.1	1224.7
$C_1C_2...C_6$	226.8	27.2	5.4	6169.0	1224.7
$D_1D_2...D_6$	226.8	43.3	5.4	9820.4	1224.7
$A_1B_1C_1D_1$	562.9	21.65	10.8	12187.0	6079.3
$A_2B_2C_2D_2$	562.9	21.65	8.4	12187.0	4728.4
$A_3B_3C_3D_3$	562.9	21.65	6.4	12187.0	3602.6
$A_4B_4C_4D_4$	562.9	21.65	4.4	12187.0	2476.8
$A_5B_5C_5D_5$	562.9	21.65	2.4	12187.0	1351.0
$A_6B_6C_6D_6$	562.9	21.65	0.0	12187.0	0.0
E_1	4960.0	5.9	1.0	29264.0	4960.0
E_2	4960.0	20.3	1.0	100688.0	4960.0
E_3	4960.0	34.8	1.0	172608.0	4960.0
$A_1D_1D_2A_2$	748.2	21.65	9.6	16199.0	7183.0
$A_5D_5D_6A_6$	748.2	21.65	1.2	16199.0	897.8
$A_2G_{11}G_{12}A_5$	259.2	3.0	5.4	777.6	1400.0
$D_2D_5G_{14}G_{15}$	259.2	4.0	5.4	1036.8	1400.0
Floor Panel	2572.0	21.65	5.4	55684.0	13889.0
Σ	23751.4		Σ	484540	62786.7

Step 4. Elastic center of the spring support system.

Elastic center of spring support system = $\{\overline{X}_s, \overline{Y}_s\}$.

$$\overline{X}_s = \frac{\Sigma WX}{\Sigma W}$$

$$= \frac{167.2P}{8P} = 20.9 \text{ ft}$$

$$\overline{Y}_s = \frac{\Sigma WY}{\Sigma W}$$

$$= \frac{43.2P}{8P} = 5.4 \text{ ft}$$

Figure 6A-9

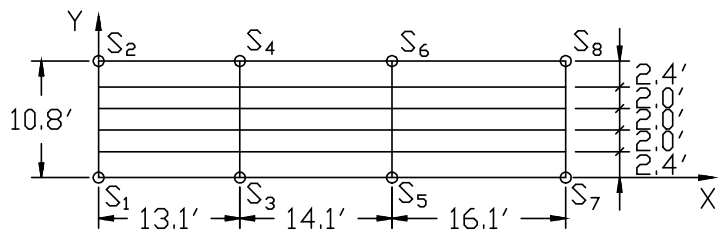

NOTE: All springs have the same stiffness

Spring No.	Force (W)	*X* (ft)	*Y* (ft)	*WX*	*WY*
S_1	P	0	0	0	0
S_2	P	0	10.8	0	10.8P
S_3	P	13.1	0	13.1P	0
S_4	P	13.1	10.8	13.1P	10.8P
S_5	P	27.2	0	27.2P	0
S_6	P	27.2	10.8	27.2P	10.8P
S_7	P	43.3	0	43.3P	0
S_8	P	43.3	10.8	43.3P	10.8P
Σ	8P		Σ	167.2P	43.2P

Step 5. Find the weight and location of ballast to balance the system (relocate the c.g. of the platform to coincide with the elastic center of the isolation system).

a. For the *x* direction, try placing ballast at *x* = 30.3 ft, i.e. 4 feet from the right edge of the platform. The ballast is placed symmetrically about the *x* axis of the elastic center so as not to affect the location of the center of gravity in the *y* direction.

Weight of ballast = W_{BX}

$$\Sigma W_1 X + 39.3 W_{BX} = \overline{X}_s \left[\Sigma W_1 + W_{BX}\right]$$
$$484{,}540 + 39.3 W_{BX} = 20.9\left(23{,}751.4 + W_{BX}\right)$$
$$W_{BX} = 11{,}864 / 18.4 = 644.8 \; lbs$$

b. For the *y* direction, try placing ballast at *y* = 9.6 feet, i.e. 1.2 feet from the top of the platform. The ballast is placed symmetrically about the *y* axis of the elastic center so as not to affect the location of the center of gravity in the *x* direction.

Weight of ballast = W_{BY}

$$\Sigma W_1 Y + 9.6 W_{BY} = \overline{Y}_s \left[\Sigma W_1 + W_{BY}\right]$$
$$62{,}786.7 + 9.6 W_{BY} = 5.4\left(23{,}571.4 + W_{BY}\right)$$
$$W_{BY} = 65{,}470.9 / 4.2 = 15{,}588.3 \; lbs$$

c. Total ballast

$W_B = W_{BX} + W_{BY}$ = 644.8 + 15588.3 = 16233 lbs

Step 6. Total load on the platform and equivalent uniform load.

a. Total load.

Dead Load:

Floor panel	=	2572 lbs
Members	=	4284.6
Grating	=	2014.8
Σ	=	8871.4 lbs

Live Load:

Equipment	=	14880 lbs
Ballast	=	16233

Additional Ballast = 0.25(30606) = 7651.6

Personnel (5 @ 150 lb) = 750

Σ = 39514.6 lbs

Total = 8871.4 + 39514.6

= 48386 lbs

b. Equivalent uniform load

$$W = \frac{48386}{10.8 \times 43.3}$$
$$= 103.5\,psf \le 170\,psf \qquad \text{O.K.}$$

Preliminary design of platform members is O.K. However, members supporting ballast must be checked as their actual load may be higher than the equivalent uniform load.

Step 7. Natural frequency of the individual members of the platform.

For a simply supported member with a uniform load,

$$\text{Natural frequency } f_n = \frac{9.87}{2\pi}\frac{EIg}{WL^4}$$

Primary Members (a): A portion of the adjacent slab acts with the beam. Add 20% of the mass of the slab on each side of the beam to the actual mass of the beam.

W10×21

I = 107 in^4

L = 10.8 × 12

= 129.6 inches

b = 0.40(7.05 + 8.05)

= 6.04 feet

g = 386.4 in/sec^2

E = 29000 × 10^3 psi.

w: (Use equivalent uniform load)

$$\overline{w} = 102.4 \times 6.04$$

$$= 618.5 \text{ lb/ft}$$

$$= 51.54 \text{ lb/in}$$

$$f_n = \frac{9.87}{2\pi}\left[\frac{29000 \times 10^3 \times 107 \times 386.4}{51.54 \times 29.6^4}\right]^{1/2}$$

$$= 14.3 cps$$

<u>Secondary Members</u> (b): Since the spacing of the secondary beams is less than 1/4 of the length of the beams the total mass of the slab acts with the beam.

W 8×13

I = 39.6 in^4

L = 16.1 × 12

= 193.2 in

b = 2.2 ft

w = 102.4 × 2.2

= 225.3 lb/ft

= 18.78 lb/in

E = 29000 × 10^3 psi

g = 386.4 in/sec^2

$$f_n = \frac{9.87}{2\pi}\left[\frac{29{,}000 \times 10^3 \times 39.6 \times 386.4}{18.78 \times 193.2^4}\right]^{1/2}$$

$$= 6.5 \text{ cps}$$

Step 8. Required frequency of system to limit motions.

To limit the maximum acceleration of the system to 0.5*g* or less, choose the frequency of the system from Figure 6A-7 (+) as

f = 1 cps

which produces a maximum acceleration of 0.4*g* and a maximum dynamic displacement of 4.7 inches.

Step 9. Verification of rigid body motion of platform.

$f_{individual\ member} > 5 \times f_{system}$

From Step 8,

$f_{system} = 1$ cps

From Step 7,

$f_{primary\ member} = 14.2$ cps > 5 cps O.K.

$f_{secondary\ member} = 6.5$ cps > 5 cps O.K.

Therefore, platform is in rigid body motion.

Step 10. Natural frequency of platform for horizontal motion (i.e. pendulum type action).

Assume the center of gravity of supported mass is located at the top of the platform so that the length of the pendulum arm is 17.4 feet.

Frequency of platform for horizontal motion

$$f = 1/(2\pi)\ (386.4/L)^{1/2} \qquad (6\text{-}56)$$

$= 0.22$ cps

Step 11. Check for dynamic coupling of vertical and horizontal motion.

From Step 8,

$f_{vertical\ motion} = 1$ cps

From Step 10,

$f_{horizontal\ motion} = 0.22$ cps $< 1/2\ f_{vertical\ motion} = 0.5$ cps

Dynamic coupling will not occur.

Step 12. Maximum dynamic displacement, velocity and acceleration for horizontal motion.

From shock spectra for horizontal motion, (Figure 6A-7 (+)) for $f = 0.22$ cps,

Maximum acceleration = $0.007g < 0.75g$ O.K.

Maximum velocity = 0.9 in/sec

Maximum dynamic displacement = 1.3 in

The maximum dynamic displacement is the required “rattle space” or the

minimum horizontal clearance between the platform and the structure or anything attached to the structure.

Step 13. Load in each spring.

$$\text{Load in each spring} = \frac{\text{Total Load}}{\text{Number of Springs}}$$
$$= \frac{47{,}878.9}{8}$$
$$= 5985 \text{ lbs}$$

Step 14. Design the springs.

a. Static displacement

From Step 8,

For a maximum acceleration of 0.48*g* the maximum dynamic displacement = 4.7 in

So, static displacement = 4.7/0.48

b. Stiffness of spring = 4.7/0.48 = 9.79

$$K = \frac{\text{Load in each spring}}{\text{Static displacement}}$$
$$= \frac{5985}{9.79} = 611.2 \textit{ lb/in}$$

or

$K = (2\pi f_{vert})^2 m$

$= (2\pi \times 1 \text{ cps})^2(5985/386.4)$

$K = 611.5$ lb/in

c. Maximum travel of spring

Maximum displacement = (static + dynamic) displacement

= 9.79 + 4.7

= 14.49 in

From Section 6-48.2

$$\text{Travel of spring} = \frac{\text{maximum displacement}}{0.85}$$
$$= \frac{14.49}{0.85}$$
$$= 17.0 \text{ in}$$

Thus the vertical rattle space (clearance) is 17.0 inches.

APPENDIX 6B LIST OF SYMBOLS

a	(1)	acceleration (in/ms^2)
	(2)	depth of equivalent rectangular stress block (in)
	(3)	long span of a panel (in)
A		area (in^2)
A_a		area of diagonal bars at the support within a width b (in^2)
A_d		door area (in^2)
A_g		area of gross section (in^2)
A_{fs}		solid area ratio of masonry cross sectional area
A_n		net area of section (in^2)
A_{no}		net cross section for out-of-plane shear (in^2/in)
A_o		area of openings (ft^2)
A_{ps}		area of prestressed reinforcement (in^2)
A_s		area of tension reinforcement within a width b (in^2)
A'_s		area of compression reinforcement within a width b (in^2)
A_s^-		area of rebound reinforcement (in^2)
A_{sH}		area of flexural reinforcement within a width b in the horizontal direction on each face (in^2)*
A_{sV}		area of flexural reinforcement within a width b in the vertical direction on each face (in^2)*
A_v		total area of stirrups or lacing reinforcement in tension within a distance, s_v (in^2)
A_{vd}		unit area of reinforcing steel for direct shear plane along support (in^2/in)
A_I, A_{II}		area of sector I and II, respectively (in^2)
b	(1)	width of compression face of flexural member (in)
	(2)	width of concrete strip in which the direct shear stresses at the supports are resisted by diagonal bars (in)
	(3)	short span of a panel (in)

* See note at end of symbols

b_s	width of concrete strip in which the diagonal tension stresses are resisted by stirrups of area A_v (in)
b_1	width of concrete strip in which the diagonal tension stresses are resisted by lacing of area A_v (in)
B	peak blast overpressure capacity
C	shear coefficient
c	(1) distance from the resultant applied load to the axis of rotation (in)
	(2) damping coefficient
	(3) distance from extreme compression fiber to neutral axis (in)
c_I, c_{II}	distance from the resultant applied load to the axis of rotation for sectors I and II, respectively (in)
C_{cr}	critical damping
C_d	shear coefficient for ultimate shear stress of one-way elements
C_D	(1) drag coefficient
	(2) coefficient for center deflection of glass
$C_D q$	drag pressure (psi)
$C_D q_o$	peak drag pressure (psi)
C_E	equivalent load factor
C_f	post-failure fragment coefficient (lb^2-ms^4/in^8)
C_H	shear coefficient for ultimate shear stress in horizontal direction for two-way elements†
C_L	leakage pressure coefficient
C_M	maximum shear coefficient
C_R	force coefficient for shear at the corners of a window frame
C_r	coefficient for effective resistance of glass
$C_{r\alpha}$	peak reflected pressure coefficient at angle of incidence α
c_s	dilatational velocity of concrete (ft/sec)

† See note at end of symbols

C_s	shear coefficient for ultimate support shear for one-way elements
C_{sH}	shear coefficient for ultimate support shear in horizontal direction for two-way elements*
C_{sV}	shear coefficient for ultimate support shear in vertical direction for two-way elements*
C_T	coefficient for period of vibration for glass
C_u	impulse coefficient at deflection X_u (psi-ms^2/in^2)
C'_u	impulse coefficient at deflection X_m (psi-ms^2/in^2)
C_v	shear coefficient for ultimate shear stress in vertical direction for two-way elements‡
C_x	shear coefficient for the ultimate shear along the long side of window frame
C_y	shear coefficient for the ultimate shear along the short side of window frame
C_1	(1) impulse coefficient at deflection X_1 (psi-ms^2/in^2) (2) ratio of gas load to shock load
C'_1	impulse coefficient at deflection X_m (psi-ms^2/in^2)
C_2	ratio of gas load duration to shock load duration
d	distance from extreme compression fiber to centroid of tension reinforcement (in)
d'	distance from extreme compression fiber to centroid of compression reinforcement (in)
d_c	distance between the centroids of the compression and tension reinforcement (in)
d_{co}	diameter of steel core (in)
d_e	distance from support and equal to distance d or d_c (in)
d_i	inside diameter of cylindrical explosive container (in)
d_1	distance between center lines of adjacent lacing bends measured normal to flexural reinforcement (in)

‡ See note at end of symbols

d_p	distance from extreme compression fiber to centroid of prestressed reinforcement (in)
d_1	diameter of cylindrical portion of primary fragment (in)
D	(1) unit flexural rigidity (lb-in) (2) location of shock front for maximum stress (ft) (3) minimum magazine separation distance (ft)
D_o	nominal diameter of reinforcing bar (in)
D_E	equivalent loaded width of structure for non-planar wave front (ft)
DIF	dynamic increase factor
DLF	dynamic load factor
e	(1) base of natural logarithms and equal to 2.71828... (2) distance from centroid of section to centroid of prestressed reinforcement (in)
$(2E')^{1/2}$	Gurney Energy Constant (ft/sec)
E	modulus of elasticity
E_c	modulus of elasticity of concrete (psi)
E_m	modulus of elasticity of masonry units (psi)
E_s	modulus of elasticity of reinforcement (psi)
f	(1) unit external force (psi) (2) frequency of vibration (cps)
f'_c	static ultimate compressive strength of concrete at 28 days (psi)
f'_{dc}	dynamic ultimate compressive strength of concrete (psi)
f'_{dm}	dynamic ultimate compressive strength of masonry units (psi)
f_{ds}	dynamic design stress for reinforcement (psi)
f_{du}	dynamic ultimate stress of reinforcement (psi)
f_{dy}	dynamic yield stress of reinforcement (psi)
f'_m	static ultimate compressive strength of masonry units (psi)
f_n	natural frequency of vibration (cps)

f_{ps} average stress in the prestressed reinforcement at ultimate load (psi)

f_{pu} specified tensile strength of prestressing tendon (psi)

f_{py} yield stress of prestressing tendon corresponding to a 1 percent elongation (psi)

f_s static design stress for reinforcement (a function of f_y, f_u & ϕ) (psi)

f_{se} effective stress in prestressed reinforcement after allowances for all prestress losses (psi)

f_u static ultimate stress of reinforcement (psi)

f_y static yield stress of reinforcement (psi)

F
(1) total external force (lbs)
(2) coefficient for moment of inertia of cracked section
(3) function of C_2 & C_1 for bilinear triangular load

F_o force in the reinforcing bars (lbs)

F_E equivalent external force (lbs)

g
(1) variable defined in Table 4-3 (+)
(2) acceleration due to gravity (ft/sec^2)

G shear modulus (psi)

h
(1) charge location parameter (ft)
(2) height of masonry wall

h' clear height between floor slab and roof slab

H
(1) span height (in)
(2) distance between reflecting surface(s) and/or free edge(s) in vertical direction (ft)

H_c
(1) height of charge above ground (ft)
(2) scaled height of charge above ground (ft/lb$^{1/3}$)

H_s height of structure (ft)

H_T scaled height of triple point (ft/lb$^{1/3}$)

i unit positive impulse (psi-ms)

$\bar{i}$ unit negative impulse (psi-ms)

$\overline{i_a}$	sum of scaled unit blast impulse capacity of receiver panel and scaled unit blast impulse attenuated through concrete and sand in a composite element (psi-ms/lb$^{1/3}$)
i_b	unit blast impulse (psi-ms)
i_b	scaled unit blast impulse (psi-ms/lb$^{1/3}$)
i_{bt}	total scaled unit blast impulse capacity of composite element (psi-ms/lb$^{1/3}$)
$\overline{i_{ba}}$	scaled unit blast impulse capacity of receiver panel of composite element (psi-ms/lb$^{1/3}$)
$\overline{i_{bd}}$	*scaled unit blast impulse capacity of donor panel of composite element (psi-ms/lb$^{1/3}$)*
i_e	unit excess blast impulse (psi-ms)
i_r	unit positive normal reflected impulse (psi-ms)
i_r^-	unit negative normal reflected impulse (psi-ms)
i_s	unit positive incident impulse (psi-ms)
i_s^-	unit negative incident impulse (psi-ms)
I	moment of inertia (in^4)
I_a	average of gross and cracked moments of inertia of width b (in^4)
I_c	moment of inertia of cracked concrete section of width b (in^4)
I_g	moment of inertia of gross concrete section of width b (in^4)
I_m	(1) mass moment of inertia (lb-ms^2-in) (2) moment of inertia of masonry block per unit width (in^4/in)
I_n	moment of inertia of net section of masonry unit (in^4/in)
j	ratio of distance between centroids of compression and tension forces to the depth d
K	(1) unit stiffness (psi-in for slabs) (lb/in/in for beams)(lb/in for springs)
K_e	elastic unit stiffness (psi/in for slabs) (lb/in/in for beams)
K_{ep}	elasto-plastic unit stiffness (psi-in for slabs) (psi for beams)

K_E	(1)	equivalent elastic unit stiffness (psi-in for slabs) (psi for beams)
	(2)	equivalent spring constant
K_L	load factor	
K_{LM}	load-mass factor	
$(K_{LM})_u$	load-mass factor in the ultimate range	
$(K_{LM})_{up}$	load-mass factor in the post-ultimate range	
K_M	mass factor	
K_m	Constant defined in section 6-7.3.2	
K_v	Constant defined in section 6-7.3.4	
K_R	resistance factor	
KE	kinetic energy	
l	charge location parameter (ft)	
l_p	spacing of same type of lacing bar (in)	
L	(1)	span length (in)§
	(2)	distance between reflecting surface(s) and/or free edge(s) in horizontal direction (ft)
L_l	length of lacing bar required in distance s_l (in)	
L_o	embedment length of reinforcing bars (in)	
L_s	length of shaft (in)	
L_w	wave length of positive pressure phase (ft)	
L_w^-	wave length of negative pressure phase (ft)	
L_{wb}, L_{wd}	wave length of positive pressure phase at points *b* and *d*, respectively (ft)	
L_v	shear wall length resisting in-plane shear (in)	
L_1	total length of sector of element normal to axis of rotation (in)	
m	unit mass (psi-ms^2/in)	
m_a	average of the effective elastic and plastic unit masses (psi-ms^2/in)	

§ See note at end of symbols

m_e		effective unit mass (psi-ms^2/in)
m_u		effective unit mass in the ultimate range (psi-ms^2/in)
m_{up}		effective unit mass in the post-ultimate range (psi-ms^2/in)
M	(1)	unit bending moment (in-lbs/in)
	(2)	total mass (lb-ms^2/in)
M_e		effective total mass (lb-ms^2/in)
M_u		ultimate unit resisting moment (in-lbs/in)
M_u^-		ultimate unit rebound moment (in-lbs/in)
M_c		moment of concentrated loads about line of rotation of sector (in-lbs)
M_A		fragment distribution parameter
M_E		equivalent total mass (lb-ms^2/in)
M_{HN}		ultimate unit negative moment capacity in horizontal direction (in-lbs/in)*
M_{HP}		ultimate unit positive moment capacity in horizontal direction (in-lbs/in)*
M_N		ultimate unit negative moment capacity at supports (in-lbs/in)
M_P		ultimate unit positive moment capacity at midspan (in-lbs/in)
M_{VN}		ultimate unit negative moment capacity in vertical direction (in-lbs/in)**
M_{VP}		ultimate unit positive moment capacity in vertical direction (in-lbs/in)*
n	(1)	modular ratio
	(2)	number of time intervals
	(3)	number of glass pane tests
N		number of adjacent reflecting surfaces
N_f		number of primary fragments larger than W_f
p		reinforcement ratio equal to (A_s/bd) or (A_s/bd_c)
p'		reinforcement ratio equal to (A'_s/bd) or (A'_s/bd_c)
p_b		reinforcement ratio producing balanced conditions at ultimate strength
p_p		prestressed reinforcement ratio equal to A_{ps}/bd_p

** See note at end of symbols

p_m mean pressure in a partially vented chamber (psi)

p_{mo} peak mean pressure in a partially vented chamber (psi)

p_H reinforcement ratio in horizontal direction on each face*

p_T reinforcement ratio equal to $p_H + p_v$

p_v reinforcement ratio in vertical direction on each face*

$p(x)$ distributed load per unit length

P (1) pressure (psi)
(2) concentrated load (lbs)

P^- negative pressure (psi)

P_i (1) interior pressure within structure (psi)
(2) interior pressure increment (psi)

P_f fictitious peak pressure (psi)

P_o peak pressure (psi)

P_r peak positive normal reflected pressure (psi)

P_r^- peak negative normal reflected pressure (psi)

p_{ra} peak reflected pressure at angle of incidence a (psi)

P_s positive incident pressure (psi)

P_{sb}, P_{se} positive incident pressure at points *b* and *e*, respectively (psi)

P_{so} peak positive incident pressure (psi)

P_{so}^- peak negative incident pressure (psi)

P_{sob}, P_{sod}, P_{soe} peak positive incident pressure at points *b*, *d*, and *e*, respectively (psi)

$P(F)$ probability of failure of glass pane

q dynamic pressure (psi)

q_b, q_e dynamic pressure at points *b* and *e*, respectively (psi)

q_o peak dynamic pressure (psi)

q_{ob}, q_{oe} peak dynamic pressure at points *b* and *e*, respectively (psi)

r (1) unit resistance (psi)
(2) radius of spherical TNT (density equals 95 lb/ft^3) charge (ft)

$\bar{r}$	unit rebound resistance (psi for panels) (lb/in for beams)
Δr	change in unit resistance (psi for panels) (lb/in for beams)
r_d	radius from center of impulse load to center of door rotation (in)
r_e	elastic unit resistance (psi for panels) (lb/in for beams)
r_{ep}	elasto-plastic unit resistance (psi for panels) (lb/in for beams)
r_s	radius of shaft (in)
r_u	ultimate unit resistance (psi for panels) (lb/in for beams)
r_{up}	post-ultimate unit resistance (psi)
r_1	radius of hemispherical portion of primary fragment (in)
R	(1) total internal resistance (lbs) (2) slant distance (ft)
R_f	distance traveled by primary fragment (ft)
R_g	uplift force at corners of window frame (lbs)
R_l	radius of lacing bend (in)
R_A	normal distance (ft)
R_E	equivalent total internal resistance (lbs)
R_G	ground distance (ft)
R_u	total ultimate resistance
R_I ,R_{II}	total internal resistance of sectors I and II, respectively (lbs)
s	sample standard deviation
s_v	spacing between shear stirrups (in)
S	height of front wall or one-half its width, whichever is smaller (ft)
S_E	strain energy
t	time (ms)
Δt	time increment (ms)
t_a	any time (ms)
t_b, t_e, t_f	time of arrival of blast wave at points *b*, *e*, and *f*, respectively (ms)

t_c	(1)	clearing time for reflected pressures (ms)
	(2)	container thickness of explosive charges (in)
t_d	rise time (ms)	
t_E	time to reach maximum elastic deflection	
t_m	time at which maximum deflection occurs (ms)	
t_o	duration of positive phase of blast pressure (ms)	
t_o^-	duration of negative phase of blast pressure (ms)	
t_{of}	fictitious positive phase pressure duration (ms)	
t_{of}^-	fictitious negative phase pressure duration (ms)	
t_r	fictitious reflected pressure duration (ms)	
t_s	CMU face shell thickness	
t_u	time at which ultimate deflection occurs (ms)	
t_y	time to reach yield (ms)	
t_A	time of arrival of blast wave (ms)	
t_1	time at which partial failure occurs (ms)	
T	(1)	duration of equivalent triangular loading function (ms)
	(2)	thickness of masonry wall
T_c	(1)	thickness of concrete section (in)
	(2)	scaled thickness of concrete section (ft/lb$^{1/3}$)
T_g	thickness of glass (in)	
T_i	angular impulse load (lb-ms-in)	
T_N	effective natural period of vibration (ms)	
T_r	rise time (ms)	
T_s	thickness of sand fill (in)	
$\overline{T_s}$	scaled thickness of sand fill (ft/lb$^{1/3}$)	
u	particle velocity (ft/ms)	
u_u	ultimate flexural or anchorage bond stress (psi)	

U	shock front velocity (ft/ms)
U_s	strain energy
v	velocity (in/ms)
v_a	instantaneous velocity at any time (in/ms)
v_b	boundary velocity for primary fragments (ft/sec)
v_c	ultimate shear stress permitted on an unreinforced web (psi)
v_f	maximum post-failure fragment velocity (in/ms)
v_f (avg.)	average post-failure fragment velocity (in/ms)
v_i	velocity at incipient failure deflection (in/ms)
v_o	initial velocity of primaFry fragment (ft/sec)
v_r	residual velocity of primary fragment after perforation (ft/sec)
v_s	striking velocity of primary fragment (ft/sec)
v_u	ultimate shear stress (psi)
v_{uH}	ultimate shear stress at distance d_e from the horizontal support(psi)††
v_{uV}	ultimate shear stress at distance d_e from the vertical support (psi)*
V	percent of voids that are grouted
V_d	ultimate direct shear capacity of the concrete of width b (lbs)
V_{dm}	dynamic shear friction strength of masonry per unit width along wall (lb/in)
V_{dH}	shear at distance d_e from the vertical support on a unit width (lbs/in)*
V_{dV}	shear at distance d_e from the horizontal support on a unit width (lbs/in)*
V_m	dynamic shear strength of masonry (lb/in)
V_o	volume of structure (ft^3)
V_s	shear force resisted by shear reinforcement (lb/in)
V_{mi}	in-plane shear force resisted by masonry (lb)
V_{mo}	out-of-plane shear force resisted by masonry (lb)
V_{si}	in-plane shear force resisted by shear reinforcement (lb)

†† See note at end of symbols

V_{so}	out-of-plane shear force resisted by shear reinforcement (lb)
V_{sH}	shear at the vertical support on a unit width (lbs/in)*
V_{sV}	shear at the horizontal support on a unit width (lbs/in)*
V_u	total shear on a width *b* (lbs)
V_{ui}	peak applied in-plane shear force to masonry wall (lb)
V_{uo}	peak applied out-of-plane shear force to masonry wall (lb)V_x unit shear along the long side of window frame (lb/in)
V_y	unit shear along the short side of window frame (lbs/in)
w	unit weight (psi for panels) (lb/in for beams)
w_c	weight density of concrete (lbs/ft^3)
w_s	weight density of sand (lbs/ft^3)
W	(1) charge weight (lbs) (2) weight (lbs)
W_c	total weight of explosive containers (lbs)
W_f	weight of primary fragment (oz)
W_{co}	total weight of steel core (lbs)
W_{c1}, W_{c2}	total weight of plates 1 and 2, respectively (lbs)
W_s	width of structure (ft)
WD	work done
x	yield line location in horizontal direction (in)‡‡
X	deflection (in)
X_a	any deflection (in)
X_c	lateral deflection to which a masonry wall develops no resistance (in)
X_e	elastic deflection (in)
X_{ep}	elasto-plastic deflection (in)
X_f	maximum penetration into concrete of armor-piercing fragments (in)

‡‡ See note at end of symbols

X'_f		maximum penetration into concrete of fragments other than armor-piercing (in)
X_m		maximum transient deflection (in)
X_p		plastic deflection (in)
X_s	(1)	maximum penetration into sand of armor-piercing fragments (in)
	(2)	static deflection (in)
X_u		ultimate deflection (in)
X_E		equivalent elastic deflection (in)
X_1	(1)	partial failure deflection (in)
	(2)	deflection at maximum ultimate resistance of masonry wall (in)
y		yield line location in vertical direction (in)[§§]
y_t		distance from the top of section to centroid (in)
Z		scaled slant distance (ft/lb$^{1/3}$)
Z_A		scaled normal distance (ft/lb$^{1/3}$)
Z_G		scaled ground distance (ft/lb$^{1/3}$)
α	(1)	angle formed by the plane of stirrups, lacing, or diagonal reinforcement and the plane of the longitudinal reinforcement (deg)
	(2)	angle of incidence of the pressure front (deg)
	(3)	acceptance coefficient
$ß$	(1)	coefficient for determining elastic and elasto-plastic resistances
	(2)	particular support rotation angle (deg)
	(3)	rejection coefficient
$ß_1$		factor equal to 0.85 for concrete strengths up to 4,000 psi and is reduced by 0.05 for each 1,000 psi in excess of 4,000 psi
γ		coefficient for determining elastic and elasto-plastic deflections
γ_p		factor for type of prestressing tendon
ε_m		unit strain in mortar (in/in)

[§§] See note at end of symbols

Θ	(1)	support rotation angle (deg)
	(2)	angular acceleration (rad/ms^2)
Θ_{max}		maximum support rotation angle (deg)
Θ_H		horizontal rotation angle (deg)*
Θ_V		vertical rotation angle (deg)*
λ		increase in support rotation angle after partial failure (deg)
μ		ductility factor
ν		Poisson's ratio
Σ_o		effective perimeter of reinforcing bars (in)
ΣM		summation of moments (in-lbs)
ΣM_N		sum of the ultimate unit resisting moments acting along the negative yield lines (in-lbs)
ΣM_p		sum of the ultimate unit resisting moments acting along the positive yield lines (in-lbs)
ρ_m		density of CMU material
ρ_g		density of grout (equal to 120 pcf)
τ_s		maximum shear stress in the shaft (psi)
ϕ	(1)	capacity reduction factor
	(2)	bar diameter (in)
Ψ_m		ratio of width of voids in CMU masonry block to overall block width
Φ_r		assumed shape function for concentrated loads
$\phi(x)$		assumed shape function for distributed loads free edge
ω		angular velocity (rad/ms)
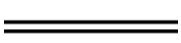		simple support
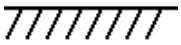		fixed support
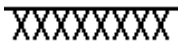		either fixed, restrained, or simple support

Note: This symbol was developed for two-way elements which are used as walls. When roof slabs or other horizontal elements are under construction, this symbol will also be applicable if the element is treated as being rotated into a vertical position.

APPENDIX 6C BIBLIOGRAPHY

Masonry

1. Design of Masonry Structures to Resist the Effects of HE Explosions, prepared by Ammann & Whitney, Consulting Engineers, New York, NY, for Picatinny Arsenal, Dover, NJ, 1976.

2. Gabrielsen, G., Wilton, C., and Kaplan, K., Response of Arching Walls and Debris from Interior Walls Caused by Blast Loading, URS 7030-23, URS Research Company, San Mateo, CA, February 1976.

3. McDowell, E., McKee, K., and Sevin, E., Arching Action Theory of Masonry Walls, Journal of the Structural Division, Journal of the Structural Division, ASCE, Vol. 82, No. ST 2, March 1956.

4. Wilton, C., and Gabrielsen, B., Shock Tunnel Tests of Pre-Loaded and Arched Wall Panels, URS 7030-10, URS Research Company, San Mateo, CA. June 1973.

1\

5. Bowles, P.K., Grosch, D.J., Goodlin, D. and Plenge, B.T., “Fragment Penetration Effects Model,” AFRL-MN-EG-TR-1998-7029., March, 1998.

6. NCMA TEK 2-1A, “Typical Sizes and Shapes of Concrete Masonry Units,” National Concrete Masonry Association, 2002.

7. NCMA TEK 3-6B, “Concrete Masonry Veneers,” National Concrete Masonry Association, 2005.

8. NCMA TEK 12-2B, “Joint Reinforcement for Concrete Masonry Units,” National Concrete Masonry Association, 2005.

9. Oswald, C.J., Nebuda, D., Holgado, D., and Diaz, M. ” Shock Tube Testing on Reinforced Masonry Walls,” Proceedings from the 32nd DoD Explosives Safety Seminar, 2006.

10. Oswald, C.J., Nebuda, D., Diaz, M., "Component Explosive Damage Assessment Workbooks for Masonry Walls," Proceedings from the 31rst DoD Explosives Safety Seminar, 2004.

/**1**/

Precast Concrete

11. PCI Design Handbook Precast Prestressed Concrete, Prestressed Concrete Institute, Chicago, IL, 1978.

12. PCI Manual for Structural Design of Architectural Precast Concrete, Prestressed Concrete Institute, Chicago, IL.

13. PCI Manual on Design of Connections for Precast Prestressed Concrete, Prestressed Concrete Institute, Chicago, IL.

14. Lin, T. Y., Design of Prestressed Concrete Structures, John Wiley & Sons, New York, NY, July 1955.

Pre-Engineered Buildings

15. American National Standard Minimum Design Loads for Buildings and Other Structures, ANSI A58.1-1982, American National Standards Institute, New York, NY, March 1982.

16. Specification for the Design of Cold-Formed Steel Structural Members, American Iron and Steel Institute, New York, NY, 1968.

17 . Specification for the Design, Fabrication and Erection of Structural Steel for Buildings, Manual of Steel Construction, American Institute of Steel Construction, New York, NY, 1969.

18. Uniform Building Code (1979 Edition), International Conference of Building Officials, Whittier, CA, 1979.

19. Healey, J. J., et al., Design of Steel Structures to Resist the Effects of HE Explosions, Technical Report 4837, Picatinny Arsenal, Dover, NJ, August 1975.

20. Stea, W., et al., Blast Capacity Evaluation of Pre-Engineered Building, Contractor Report ARLCD-CR-79004, U.S. Army Armament Research and Development Command, Dover, NJ, March 1979.

21. Stea, W., et al., Nonlinear Analysis of Frame Structures to Blast Overpressures, by Ammann & Whitney, Consulting Engineers, New York, NY, Contractor Report ARLCD-CR-77008, U.S. Army Armament Research and Development Command, Dover, NJ, May 1977.

22. Tseng, G., et al., Design Charts for Cold-Formed Steel Panels and Wide-Flange Beams Subjected to Blast Loads, Technical Report 4838, Picatinny Arsenal, Dover, NJ, August 1975.

Suppressive Shielding

23. Final Report Application of Suppressive Structure Concepts to Chemical Agent Munitions Demilitarization System (CAMDS), Report EA-FR-2B02, Edgewood Arsenal, Aberdeen Proving Ground, MD, June 27, 1973.

24. Shields Operational for Ammunition Operations, Criteria for Design of, and Tests for Acceptance, MIL STD 398, U.S. Government Printing Office, Washington, D.C., November 5, 1976.

25. Study of Suppressive Structures Applications to an 81 mm Automated Assembly Facility, Report EA 1002, Edgewood Arsenal, Aberdeen Proving Ground, MD, April 16, 1973.

26. Suppressive Shielding, AAI Corporation, Cockeysville, MD, DAAA15-75-C-0120, U.S. Army Armament Research and Development Command, Chemical Systems Laboratory, Aberdeen Proving Ground, MD, April 1977.

27. Suppressive Shields Structural Design and Analysis Handbook, HNDM 1110-1-2, U.S. Army Corps of Engineers, Huntsville Division, Huntsville, AL, November 1977.

28. System Safety Program Requirements, MIL STD 882A, U. S. Government Printing Office, Washington, D.C., June 28, 1977.

29. Baker, W. E., et al., Design Study of a Suppressive Structure for a Melt Loading Operation, EM-CR-76043, Report No. 9, Edgewood Arsenal, Aberdeen Proving Ground, MD, December 1975.

30. Baker, W. E. and Oldham, G. A., Estimates of Blowdown of Quasi-Static Pressures in Vented Chambers, EM-CR-76029, Edgewood Arsenal, Aberdeen Proving Ground, MD, November 1975.

31. Baker, W. E. and Westine, P. S., Methods of Predicting Blast Loads Inside and Outside Suppressive Structures, EM-CR-76026, Report No. 5, Edgewood Arsenal, Aberdeen Proving Ground, MD, 1975.

32. Cox, P. A., et al., Analysis and Evaluation of Suppressive Shields, Edgewood Arsenal Contractor Report ARCFL-CR-77028, Report No. 10, Contract No. DAAA15-75-C-0083, Edgewood Arsenal, Aberdeen Proving Ground, MD, January 1978.

33. Dutton, S. R. and Katsanis, D., Computer-Aided Design of Suppressive Shields, EM-CR-76080, AAI Corporation, Baltimore, MD, Report for Edgewood Arsenal, Aberdeen Proving Ground, MD, June 1976.

34. Esparza, E. D., Estimating External Blast Loads from Suppressive Structures, Edgewood Arsenal Contract Report EM-CR-76030, Report No. 3, Edgewood Arsenal, Aberdeen Proving Ground, MD, November 1975.

35. Esparza, E. D., Baker, W. E., and Oldham, G. A., Blast Pressures Inside and Outside Suppressive Structures, Edgewood Arsenal Contractor Report EM-CR-76042, Report No. 8, Edgewood Arsenal, Aberdeen Proving Ground, MD, December 1975.

36. Gregory, F. H., Blast Loading Calculations and Structural Response Analyses of the 1/4-Scale Category I Suppressive Shield, BRL Report No. 2003, U.S. Army Ballistic Research Laboratory, Aberdeen Proving Ground, MD, August 1977.

37. Hubich, H. O. and Kachinski, R. L., Explosive Waste Removal Systems for Suppressive Shields, Edgewood Arsenal Contractor Report No. EM-CR76002, Edgewood Arsenal, Aberdeen Proving Ground, MD, August 1975.

38. Jezek, B. W., Suppressive Shielding for Hazardous Munitions Production Operations, Technical Report No. ARCSL-TR-77020, U.S. Army Armament Research and Development Command, Chemical Systems Laboratory, Aberdeen Proving Ground, MD, April 1977.

39. Kachinski, R. L., et al., Technical Feasibility of Suppressive Shields for Improved Hawk Launch Sites, Edgewood Arsenal Contractor Report No. EM-CR-76057, Edgewood Arsenal, Aberdeen Proving Ground, MD, February 1976.

40. Katsanis, D. J., Safety Approval of Suppressive Shields, Edgewood Arsenal Technical Report No. EM-TR-76088, Edgewood Arsenal, Aberdeen Proving Ground, MD, August 1976.

41. Katsanis, D. J. and Jezek, B. W., Suppressive Shielding of Hazardous Ammunition Production Operations, Technical Report No. EM-TR-76015, Edgewood Arsenal, Aberdeen Proving Ground, MD, December 1975.

42. Kingery, C. N., Coulter, G., and Pearson, R., Venting of Pressure through Perforated Plates, Technical Report No. ARBRL-TR-02105, U.S. Army Ballistic Research Laboratory, Aberdeen Proving Ground, MD, September 1978.

43. Kingery, C. N., Pearson, R., and Coulter, G., Shock Wave Attenuation by Perforated Plates with Various Hole Sizes, BRL Memorandum Report No. 2757, U.S. Army Materiel Development and Readiness Command, Alexandria, VA, June 1977.

44. Kingery, C. N., Schumacher, R., and Ewing, W., Internal Pressure from Explosions in Suppressive Shields, BRL Memorandum Report No. ARBRL-MR-02848, U.S. Army Armament Research and Development Command, Aberdeen Proving Ground, MD, June 1978.

45. Koger, D. M and McKown, G. L., Category 5 Suppressive Shield Test Report No. EM-TR-76001, Edgewood Arsenal, Aberdeen Proving Ground, MD, October 1975.

46. Kusher, A. S., et al., Recommended Design and Analysis Procedures for Suppressive Shield Structures, Technical Report No. NSWC/WOL/TR 76112, Naval Surface Weapons Center, White Oak Laboratory, White Oak, Silver Spring, MD, March 1977.

47. Nelson, K. P., Spherical Shields for the Containment of Explosions, Edgewood Arsenal Technical Report No. EM-TR-76096, Edgewood Arsenal, Aberdeen Proving Ground, MD, March 1977.

48. Nelson, K. P., The Economics of Applying Suppressive Shielding to the M483A1 Improved Conventional Munitions Loading, Assembling and Packing Facility, Technical Report No. EM-TR-76087, Edgewood Arsenal, Aberdeen Proving Ground, MD, January 1977.

49. Oertel, F. H., Evaluation of Simple Models for the Attenuation of Shock Waves by Vented Plates, BRL Report No. 1906, U.S. Army Ballistic Research Laboratory, Aberdeen Proving Ground, MD, August 1976.

50. Pei, R., A Design Aid and Cost Estimate Model for Suppressive Shielding Structures, Department of Safety Engineering USAMC Intern Training Center, Report No. YTC-02-08-76-413, Red River Army Depot, Texarkana, TX, December 1975.

51. Ricchiazzi, A. J. and Barb, J. C., Test Results for 608 Gram Fragments Against Category I Suppressive Structures, BRL Memorandum Report No. 2592, U.S. Army Ballistic Research Laboratory, Aberdeen Proving Ground, MD, February 1976.

52. Schroeder, F. J., et al., Engineering Design Guidelines, Drawings and Specifications for Support Engineering of Suppressive Shields, Edgewood Arsenal Contractor Report No. EM-CR-76097, Edgewood Arsenal, Aberdeen Proving Ground, MD, December 1976.

53. Schumacher, R. N., Air Blast and Structural Response Testing of a Prototype Category III Suppressive Shield, BRL Memorandum Report No. 2701, U.S. Army Ballistic Research Laboratory, Aberdeen Proving Ground, MD, November 1976.

54. Schumacher, R. N. and Ewing, W. O., Blast Attenuation Outside Cubical Enclosures Made Up of Selected Suppressive Structures Panel Configurations, BRL Memorandum Report No. 2537, U.S. Army Ballistic Research Laboratory, Aberdeen Proving Ground, MD, September 1975.

55. Schumacher, R. N., Kingery, C. N., and Ewing, W. O., Air Blast and Structural Response Testing of a 1/4-Scale Category I Suppressive Shield, BRL Memorandum Report No. 2623, U.S. Army Ballistic Research Laboratory, Aberdeen Proving Ground, MD, May 1976.

56. Spencer, A. F. and McKivrigan, J. L., Preliminary Design Procedures for Suppressive Shields, Technical Report No. EM-TR-76089, Edgewood Arsenal, Aberdeen Proving Ground, MD, December 1976.

57. Westine, P. S. and Baker, W. E., Energy Solutions for Predicting Deformations in Blast-Loaded Structures, Edgewood Arsenal Contractor Report No. EM-CR-76027, Report No. 6, Edgewood Arsenal, Aberdeen Proving Ground, MD, November 1975.

58. Westine, P. S. and Cox, P. A., Additional Energy Solutions for Predicting Structural Deformations, Edgewood Arsenal Contractor Report No. EM-CR-76031, Report No. 4, Edgewood Arsenal, Aberdeen Proving Ground, MD. November 1975.

59. Westine, P. S. and Kineke, J. H., "Prediction of Constrained Secondary Fragment Velocities," The Shock and Vibration Bulletin, Part 2, Isolation and Damping, Impact, Blast, Bulletin 48, September 1978.

Blast Resistant Windows

60. Federal Specification Glass, Plate, Sheet, Figured (Float, Flat, for Glazing, Corrugated, Mirrors and Other Uses), General Service Administration, Federal Specification DD-G-451d, Washington, D.C., 1977.

61. Glass, Plate (Float), Sheet, Figured, and Spandrel (Heat Strengthened and Fully Tempered), General Service Administration, Federal Specification DD-G-1403B, Washington, D.C., 1972.

62. A Method for Improving the Shatter Resistance of Window Glass, U.S. Army Picatinny Arsenal, National Bomb Data Center, General Information Bulletin 73-9, Dover, NJ, November 1973.

63. PPG Glass Thickness Recommendations to Meet Architect's Specified 1-Minute Wind Load, PPG Industries, Pittsburgh, PA, March 1981.

64. Safety Performance Specifications and Methods of Test for Safety Glazing Material Used in Buildings, American National Standards Institute, ANSI Z97.1-1975, New York, NY, 1975.

65. Structural Performance of Glass in Exterior Windows, Curtain Walls, and Doors Under the Influence of Uniform Static Loads by Destructive Method, American Society for Testing Materials, ASTM Standard (draft), Draft of Proposed Standard by ASTM Committee E06.51, Philadelphia, PA, October 1982.

66. Anians, D., Experimental Study of Edge Displacements of Laterally Loaded Window Glass Plates, Institute for Disaster Research, Texas Technical University, Lubbock, TX, June 1980.

67. Beason, W. L., A Failure Prediction Model for Window Glass, Texas Technical University, NSF/RA 800231, Lubbock, TX, May 1980.

68. Beason, W. L., TAMU Glass Failure Prediction Model, Preliminary Report, Texas A&M University, College Station, TX, March 1982.

69. Beason, W. L., and Morgan, J. R., A Glass Failure Prediction Model, submitted for publication in the Journal of the Structural Division, American Society of Civil Engineers.

70. Levy, S., Bending of Rectangular Plates with Large Deflections, NACA Technical Note No. 845, 1942.

71. Meyers, G. E., Interim Design Procedure for Blast-Hardened Window Panes, 567th Shock and Vibration Bulletin, Monterey, CA, October 1985.

72. Meyers, G. E., A Review of Adaptable Methodology for Development of a Design Procedure for Blast Hardened Windows, Naval Civil Engineering Laboratory, Special Report, Port Hueneme, CA, August 1982.

73. Moore, D. M., Proposed Method for Determining the Thickness of Glass in Solar Collector Panels, Jet Propulsion Laboratory, Publication 8034, Pasadena, CA, March 1980.

74. Moore, D. M., Thickness Sizing of Glass Plates Subjected to Pressure Loads, FSA Task Report No. 5101-291, Pasadena, CA, August 1982.

75. Timoshenko, S. and Woinowsky-Krieger, S., Theory of Plates and Shells, McGraw-Hill Book Company, New York, NY, 1959.

76. Vallabhan, C. V. G. and Wang, B. Y., Nonlinear Analysis of Rectangular Glass Plates by Finite Difference Method, Texas Technical University, Institute for Disaster Research, Lubbock, TX, June 1981.

77. Weissman, S., et al., Blast Capacity Evaluation of Glass Windows and Aluminum Window Frames, U.S. Army Armament Research and Development Command, ARLCO-CR-78016, Dover, NJ, June 1978.

Underground Structures

78. Fundamentals of Protective Design for Conventional Weapons, TM 5-8551, prepared by U.S. Army Engineer Waterways Experimental Station, Vicksburg, MS, November 1983 (Draft).

79. Arya, et al., Blast Capacity Evaluation of Below-Ground Structures, by Ammann & Whitney, Consulting Engineers, New York, NY, Contractor Report ARLCO-CR-77006, U.S. Army Armament Research and Development Command, Dover, NJ, May 1977.

Earth-Covered Arch-Type Magazine

80. DoD Ammunition and Explosives Safety Standards, Department of Defense Standard, 6055.9-STD

81. Flathou, W. J., et al., Blast Loading and Response of Underground Concrete-Arch Protective Structures, WT-1420, U.S. Waterways Experiment Station, Jackson, MS, Operation Plumbbob, Project 3.1, Chief, Defense Atomic Support Agency, Washington, D.C.

82. Sound, A. R., Summary Report of Earth-Covered, Steel-Arch Magazine Tests, Technical Progress Report No. 401, U.S. Naval Weapon Center, China Lake, CA, July 1965.

83. Weals, F. H., Tests to Determine Separation Distances of Earth-Covered Magazines, U.S. Naval Weapon Center, China Lake, CA, Annals of the New York Academy of Sciences, Conference on Prevention of and Protection against Accidental Explosion of Munitions, Fuels and Other Hazardous Moistures, Volume 152, Art. 1, October 1968.

Blast Valves

84. Investigations Concerning Feasibility of Various Designs for a Blast Closure Device, by American Machine and Foundry Co., Chicago, IL, under Contract No. NBy-13030, for U.S. Navy, Bureau of Yards and Docks, Washington, D.C.

85. Shock Tube Test of Mosler Safe Company Blast Valve, BRL Information Memorandum No. 20, Explosion Kinetics Branch, Ballistic Research Laboratories, Aberdeen Proving Ground, MD, August 1959.

86. Shock Tube Test of Mosler Safe Company Blast Valve, Phase II, BRL Information Memorandum No. 25, Explosion Kinetics Branch, Ballistic Research Laboratories, Aberdeen Proving Ground, MD, August 1959.

87. Study of Blast-Closure Devices, AFSWC-TDR-62-10, by American Machine and Foundry Co., Chicago, IL, for Air Force Special Weapons Center, Kirtland Air Force Base, NM, February 1962.

88. Allen, F. C. et al., Test and Evaluation of Anti-Blast Valves for Protective Ventilating Systems, WT-1460, Operation Plumbbob, Project 31.5, available from the Office of Technical Services, Department of Commerce, Washington, D.C.

89. Bayles, J. J., Development of the B-D Blast-Closure Valve, Technical Note No. N-546, U.S. Naval Civil Engineering Laboratory, Port Hueneme, CA, December 1963.

90. Bergman, S. and Staffors, B., Blast Tests on Rapid-Closing Anti-Blast Valves, Royal Swedish Fortification Administration, Stockholm, Sweden, November 1963.

91. Breckenridge, T. A., Preliminary Development and Tests of a Blast- Closure Valve, Technical Note No. N-460, U.S. Naval Civil Engineering Laboratory, Port Hueneme, CA, September 1962.

92. Chapler, R. S., Evaluation of Four Blast Closure Valves, Technical Report R 347, DASA-13.154, U.S. Naval Civil Engineering Laboratory, Port Hueneme, CA, January 1965 (Official Use Only).

93. Cohen, E., Blast Vulnerability of Deep Underground Facilities as Affected by Access and Ventilation Openings, Ammann & Whitney, Consulting Engineers, New York, NY, Proceedings of the Second Protective Construction Symposium, R-341, Volume I, The RAND Corporation, Santa Monica, CA, 1959.

94. Cohen, E. and Weissman, S., Blast Closure Systems, Ammann & Whitney, Consulting Engineers, New York, NY, Proceedings of the Symposium on Protective Structures for Civil Populations, Subcommittee on Protective Structures, Advisory Committee on Civil Defense, National Academy of Sciences and National Research Council, April 1965.

95. Hassman, M. and Cohen, E., Review of Blast Closure Systems, Ammann & Whitney, Consulting Engineers, New York, NY, 29th Symposium on Shock, Vibration and Associated Environments, Part III, Bulletin No. 29, U.S. Naval Research Laboratory, Washington, D.C., July 1961, available from the Office of Technical Services, Department of Commerce, Washington, D.C.

96. Hellberg, E. N., Performance of the Swedish Rapid-Closing Anti-Blast Valve, Technical Note No. 439, Task Y-F 008-10-11, U.S. Naval Civil Engineering Laboratory, Port Hueneme, CA, May 1962.

97. Jones, W. A., et al., A Simple Blast Valve, Suffield Technical Note No. 113, Suffield Experimental Station, Ralston, Alberta, Canada, Defense Research Board, Department of National Defense, Canada, DRB Project No. D89-16-01-09, February 1963.

98. Ort, F. G. and Mears, M. D., Development of the Closure, Protective Shelter, Anti-Blast, 600 cfm, E19R1, Technical Report CWLR-2269, Chemical Warfare Laboratories, U.S. Army Chemical Center, Edgewood, MD, January 1959.

99. Stephenson, J. M., Preliminary Tests of the Stephenson Valve, 2nd Report, Technical Note No. N-619, U.S. Naval Civil Engineering Laboratory, Port Hueneme, CA, July 1964.

100. Stephenson, J. M., Test of German Sand-Type Filter, Technical Report R263, U.S. Naval Civil Engineering Laboratory, Port Hueneme, CA, November 1963.

Shock Isolation Systems

101. A Guide for the Design of Shock Isolation Systems for Underground Protective Structures, AFSWC TDR 62-64, Air Force Special Weapons Center, Kirtland AFB, NM, December 1962.

102. Handbook of Mechanical Spring Design, Associated Spring Corporation, Bristol, CT, 1964.

103. Study of Shock Isolation for Hardened Structures, Department of the Army, Office of the Chief of Engineers, Washington, D.C., AD 639 303, June 1966.

104. Crawford, R. E. Higgins, C. J., and Bultmann, E.H., A Guide for the Design of Shock Isolation Systems for Ballistic Missile Defense Facilities, TR S-23, U.S. Army Construction Engineering Research Laboratory, Champaign, IL, August 1973.

105. Harris, C.M. and Crede, C.E., Shock and Vibration Handbook, McGraw-Hill Book Company, New York, NY, 1961.

106. Hirsch, A.E., Man's Response to Shock Motions, David Taylor Model Basin Report 1797, Washington, D.C. AD 4 36809, January 1964.

107. Platus, David L., et al., Investigation of Optimum Passive Shock Isolation Systems, AFWL-TR-72-148, Air Force Weapons Laboratory, Kirtland Air Force Base, NM, November 1972.

108. Saffell, H.R., Development of Standard Design Specifications and Techniques for Shock Isolation Systems, Document No. SAF-37, Vol. I, U.S. Army Engineer Division, Huntsville, AL, August 1971.

109. Shigley, J.E., Mechanical Engineering Design, McGraw-Hill Book Company, New York, NY, 1963.

110. Veletnor, A., Design Procedures for Shock Isolation System for Underground Protective Structures, RTD-TDR-63-3096, Vol. III, Air Force Weapons Laboratory, Kirtland Air Force Base, NM, January 1964.