APPENDIX 5: STRUCTURAL STEEL DESIGN

APPENDIX 5A ILLUSTRATIVE EXAMPLES

This appendix presents detailed design procedures and numerical examples on the following topics:

1. Flexural elements subjected to pressure-time loading.
2. Lateral bracing requirements.
3. Cold-formed steel panels.
4. Columns and beam-columns.
5. Open-web joists.
6. Single-story rigid frames.
7. Blast doors.
8. Unsymmetrical bending.

References are made to the appropriate sections of this chapter and to charts, tables, and equations from Chapter 3 "Principles of Dynamic Analysis."

PROBLEM 5A-1 DESIGN OF BEAMS FOR PRESSURE-TIME LOADING

Problem: **Design of a purlin or girt as a flexural member which responds to a pressure-time loading.**

Procedure:

Step 1. Establish the design parameters:

a. Pressure-time load

b. Design criteria: Maximum support rotation, Θ, depending on protection category

c. Span length, L, beam spacing, b, and support conditions

d. Properties and type of steel used, i.e., f_y and E

Step 2. Determine the equivalent static load, w, using the following preliminary dynamic load factors as discussed in Section 5-22.3.

$$\text{DLF} = \begin{cases} 1.0 \text{ for } \Theta = 2° \\ 0.5 \text{ for } \Theta = 12° \end{cases}$$

Step 3. Using the appropriate resistance formula from Table 3-1 (+) and the equivalent static load derived in Step 2, determine M_p.

Step 4. Select a member size using Equation 5-7 or 5-8. Check the local buckling criteria of Section 5-24 for the member chosen.

Step 5. Determine the mass, m, including the weight of the decking over a distance center-to-center of purlins or girts, and the weight of the members.

Step 6. Calculate the equivalent mass M_e using Table 3-12 (+) (Chapter 3).

Step 7. Determine the equivalent elastic stiffness K_E from Table 3-8 (+).

Step 8. Calculate the natural period of vibration, T_N, using Equation 5-15.

Step 9. Determine the total resistance, R_u, and peak pressure load, P. Enter appropriate chart in Section 3-19.3 with the ratios T/T_N and P/R_u and the values of C_1 and C_2 in order to establish the ductility ratio μ.

Step 10. Check the assumed DIF used in Step 4. Enter the response charts with the ratio T/T_N and μ and to determine t_E. Using Equation 5-1, determine the strain rate. Using Figure 5-2 (+), determine the DIF. If there is a significant difference from that assumed, repeat Steps 4 through 9.

Step 11. Calculate the equivalent elastic deflection X_E as given by the equation

$$X_E = R_u/K_E$$

and establish the maximum deflection X_m given by

$$X_m = \mu X_E$$

Compute the corresponding member end rotation. Compare Θ with the criteria summarized in Section 5-35.

$$\tan \Theta = X_m/(L/2)$$

Step 12. Check for shear using equation 5-16 and Table 3-9 (+).

Step 13. If a different member size is required, repeat Steps 2 through 12 by selecting a new dynamic load factor.

EXAMPLE 5A-1 DESIGN OF A BEAM FOR PRESSURE-TIME LOADING

Required: **Design a simply supported beam for shear and flexure in a low pressure range where personnel protection is required.**

Step 1. Given:

a. Pressure-time loading (Figure 5A-1 (+))

b. Criteria: Personnel protection required. Support rotation limited to 2°

c. Structural configuration (Figure 5A-1)

d. f_y = 36 ksi, $E = 30 \times 10^3$ ksi, A36 steel

e. Compression flange braced.

f. The girt supports a wall panel weighing 4.8 psf

Figure 5A-1 Beam Configuration and Loading, Example 5A-1

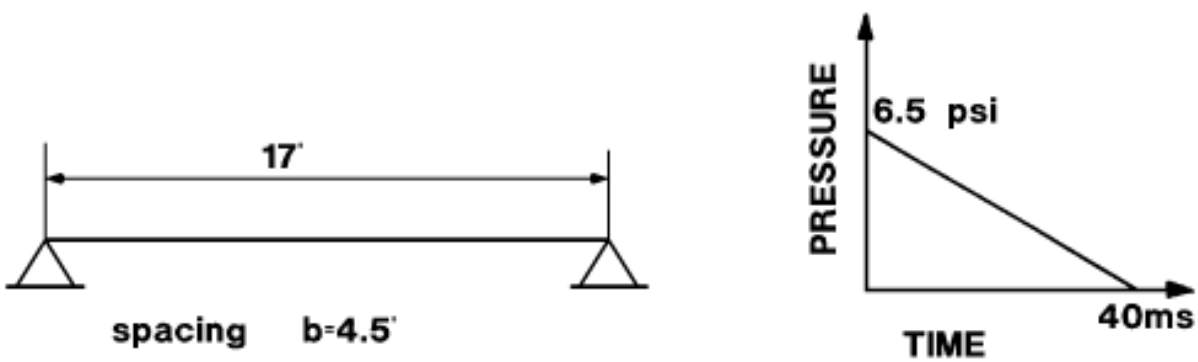

Step 2. Determine the equivalent static load (i.e., required resistance). For this pressure range, the equivalent static load is assumed equal to the peak pressure (Section 5-22.3). The running load becomes:

$w = 1.0 \times 6.5 \times 4.5 \times 144/1000 = 4.21$ k/ft

Step 3. Determine required M_p.

$$M_p = \frac{wL^2}{8} = \frac{4.21 \times 172}{8} = 152.1\,\text{k} - \text{ft}$$ (Table 3-1 (+))

Step 4. Select a member.

$$(S + Z) = \frac{2M_p}{f_{ds}} = \frac{2 \times 152.1 \times 12}{51.1} = 71.4\ \text{in}^3$$ (Equation 5-7)

where

$f_{ds} = SIF \times DIF \times f_y = 1.1 \times 1.29 \times 36 = 51.1$ ksi (Equation 5-2)

where

SIF = 1.1 from Section 5-13.2

DIF = 1.29 corresponding to a DIF in the low pressure range (see Table 5-2 (+))

Select W12 × 26, $S = 33.4$ in^3 $I = 204$ in^4

$Z = 37.2$ in^3

$S + Z = 70.6$ in^3

$M_p = (70.6 \times 51.1)/(2 \times 12) = 150.3$ k-ft

Check local buckling criteria.

$d/t_w = 53.1 < 412/(f_y)^{1/2} = 68.7$ O.K. (Equation 5-17)

$b_f/2t_f = 8.5$ O.K. (Section 5-24)

Step 5. Calculate M.

$$M = \frac{wL}{g} = \frac{[(4.5 \times 4.8) + 26](17 \times 10^6)}{32.2 \times 1000} = 25{,}130 \text{ (k} - \text{ms}^2\text{)/ft}$$

Step 6. Calculate the effective mass, M_e, for a response in the elasto-plastic range.

$K_{LM} = (0.78 + 0.66)/2 = 0.72$ (Table 3-12 (+))

$M_e = 0.72 \times 25{,}130 = 18{,}100$ k-ms^2/ft

Step 7. Determine K_E.

$$K_E = \frac{384EI}{5L^3} = \frac{384 \times 30 \times 10^3 \times 204}{5 \times 17^3 \times 144} = 664k/ft$$ (Table 3-8 (+))

Step 8. Calculate T_N.

$T_N = 2\pi(M_e/K_E)^{1/2} = 2\pi(18{,}100/664)^{1/2}$ (Equation 5-15)

Step 9. Establish the ductility ratio μ and compare with the criteria.

$T/T_N = 40/32.8 = 1.22$

$$P = p \times L \times b = \frac{6.5 \times 17 \times 4.5 \times 144}{1000} = 71.6 \text{ kips}$$

$R_u = 8M_p/L = (8 \times 150.3)/17 = 70.7$ kips

$P/R_u = 71.6/70.7 = 1.01$

From Figure 3-64a (+),

$\mu = X_m/X_E = 2.1$

At this point, the designer would check lateral bracing requirements. Sample problem 5A-2 outlines this procedure.

Step 10. Check the assumed DIF.

From Figure 3-64a (+), for $P/R_u = 1.01$ and $T/T_N = 1.22$.

$t_E/T = 0.24$

$t_E = 0.24 \times 40 = 9.6$ ms

Find $\dot{\varepsilon}$:

$\dot{\varepsilon} = f_{ds}/(E_s t_E) = 51.1/30 \times 10^3 \times .0096 = 0.177$ in/in/sec (Equation 5-1)

From Figure 5-2 (+)

DIF = 1.31 = 1.29 O.K.

Step 11. Determine X_E:

$X_E = R_u/K_E = (70.7 \times 12)/664 = 1.28$ inch

Find X_m:

$X_m = \mu X_E = 2.1 \times 1.28 = 2.69$ inches

Find end rotation, Θ.

$\tan \Theta = X_m/(L/2) = 2.69/(8.5 \times 12) = 0.0264$ (Table 3-5 (+))

$\Theta = 1.52° < 2°$ O.K.

Step 12. Check shear.

Dynamic yield stress in shear

$f_{dv} = 0.55\, f_{ds} = 0.55 \times 51.1 = 28.1$ ksi (Equation 5-4)

Ultimate shear capacity

$V_p = f_{dv} \times A_w = 28.1 \times 0.23 \times 12 = 77.6$ kips (Equation 5-16)

Maximum support shear

$V_s = r_u \times L/2 = R_u/2 = 70.7\ /2 = 35.4$ kips (Table 3-9 (+))

$V_p > V_s$ O.K.

PROBLEM 5A-2 SPACING OF LATERAL BRACING

Problem: Investigate the adequacy of the lateral bracing specified for a flexural member.

The design procedure for determining the maximum permissible spacing of lateral bracing is essentially a trial and error procedure if the unbraced length is determined by the consideration of lateral torsional buckling only. However, in practical design, the unbraced length is usually fixed by the spacing of purlins and girts and then must be investigated for lateral torsional buckling.

Procedure:

Step 1. Establish design parameters.

a. Bending moment diagram obtained from a design analysis

b. Unbraced length, l, and radius of gyration of the member, r_y, about its weak axis

c. Dynamic design strength, f_{ds} (Section 5-13)

d. Design ductility ratio, μ, from a design analysis

Step 2. From the moment diagram, find the end moment ratio, M/M_p, for each segment of the beam between points of bracing. (Note that the end moment ratio is positive when the segment is bent in reverse curvature and negative when bent in single curvature).

Step 3. Compute the maximum permissible unbraced length, l_{cr}, using Equation 5-20 or 5-21, as applicable. Since the spacing of purlins and girts is usually uniform, the particular unbraced length that must be investigated in a design will be the one with the largest moment ratio. The spacing of bracing in nonyielded segments of a member should be checked against the requirements of the AISC Specification (see Section 5-26.3).

Step 4. The actual length of a segment being investigated should be less than or equal to l_{cr}.

EXAMPLE 5A-2 SPACING OF LATERAL BRACING

Required: **Investigate the unbraced lengths shown for the W10 × 39 beam in Figure 5A-2 (+).**

Step 1. Given:

a. Bending moment diagram shown in Figure 5A-2 (+)

b. Unbraced length (each segment) = 36 inches

r_y = 1.98 inches

c. Dynamic design stress = 51.1 ksi

d. Design ductility ratio, μ = 5

Step 2. The moment ratio is -0.5 for segments BC and CD (single curvature) and 0.5 for segments AB and DE (double curvature).

Step 3. Determine the maximum permissible unbraced length. By inspection, Equation 5-21 results in the lower value of l_{cr}.

$$\frac{\beta l_{cr}}{r_y} = \frac{1375}{f_{ds}}$$

Figure 5A-2 Bending Moment Diagram, Example 5A-2

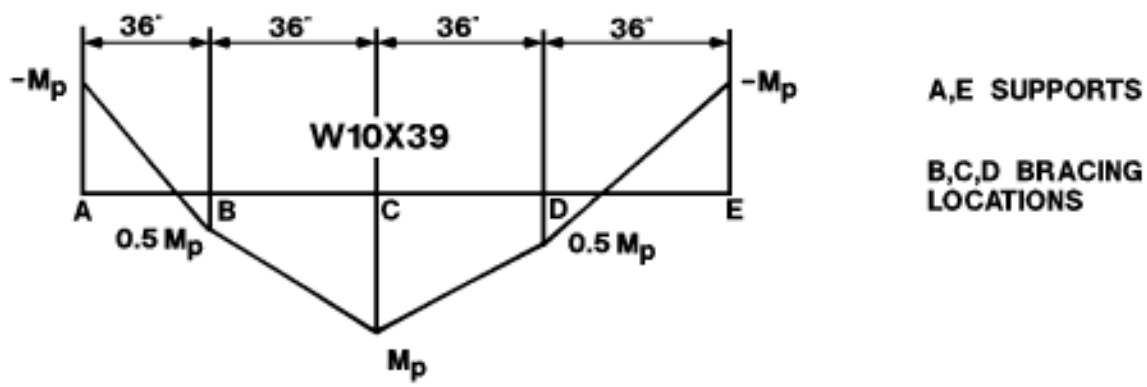

From Figure 5-8 (+) for $x_m / x_E = 5$, $\beta = 1.36$

$$l_{cr} = \frac{1375 \times 1.98}{1.36 \times 51.1} = 39.2 \text{in}$$

Step 4. Since the actual unbraced length is less than 39.2 inches, the spacing of the bracing is adequate.

PROBLEM 5A-3 DESIGN A ROOF DECK AS A FLEXURAL MEMBER WHICH RESPONDS TO PRESSURE-TIME LOADING

Problem: **Design of cold-formed, light gauge steel panels subjected to pressure-time loading.**

Step 1. Establish the design parameters:

a. Pressure-time loading

b. Design criteria: Specify values of μ and Θ depending upon whether tension-membrane action is present or not.

c. Span length and support conditions

d. Mechanical properties of steel

Step 2. Determine an equivalent uniformly distributed static load for a 1-ft width of panel, using the following preliminary dynamic load factors.

	Tension-membrane action not present	**Tension-membrane action present**
DLF	1.33	1.00

These load factors are based on an average value of T/T_N = 10.0, the recommended design ductility ratios. They are derived using Figure 3-64 (+/+) of Chapter 3.

Equivalent static load

$$w = \text{DLF} \times p \times b$$

$$b = 1 \text{ ft}$$

Step 3. Using the equivalent load derived in Step 2, determine the ultimate moment capacity using Equation 5-29 or 5-30 (assume positive and negative are the same).

Step 4. Determine required section moduli using Equation 5-27 or 5-28.

Select a panel.

Step 5. Determine actual section properties of the panel:

S^+, S^-, I_{20}, w

Step 6. Compute r_u, the maximum unit resistance per 1-ft width of panel using Equation 5-29 or 5-30.

Step 7. Determine the equivalent elastic stiffness, $K_E = r_u L/X_E$, using Equation 5-31.

Step 8. Compute the natural period of vibration.

$$T_N = 2\pi\,(0.74\,mL/K_E)^{1/2} \qquad \text{(Equation 5-32)}$$

Step 9. Calculate P/r_u and T/T_N. Enter Figure 3-64 (+/+) with the ratios P/r_u and T/T_N to establish the actual ductility ratio μ.

Compare μ with the criteria of Step 1. If μ is larger than the criteria value, repeat steps 4 to 9.

Step 10. Compute the equivalent elastic deflection X_E using $X_E = r_u\,L/K_E$. Evaluate the maximum deflection, $X_m = \mu X_E$.

Determine the maximum panel end rotation.

$$\Theta = \tan^{-1}\,[X_m/(L/2)]$$

Compare Θ with the criteria of step 1. If Θ is larger than specified in the criteria, select another panel and repeat steps 5 to 10.

Step 11. Check resistance in rebound using Figure 5-13 (+).

Step 12. Check panel for maximum resistance in shear by applying the criteria relative to:

a. Simple shear, Table 5-5a (+), 5-6a (+) or 5-7a (+)

b. Combined bending and shear, Table 5-5b (+), 5-6b (+) or 5-7b (+)

c. Web crippling, Figures 5-15 (+) or 5-16 (+)

If the panel is inadequate in shear, select a new member and repeat steps 4 to 12.

EXAMPLE 5A-3 DESIGN A ROOF DECK AS A FLEXURAL MEMBER WHICH RESPONDS TO PRESSURE-TIME LOADING

Required: Design a continuous cold-formed steel panel in a low pressure range.

Step 1. Given:

a. Pressure-time loading (Figure 5A-3 (+))

b. Criteria: (Tension-membrane action present)

maximum ductility ratio $\mu_{max} = 6$

maximum rotation $\Theta_{max} = 4°$

c. Structural configuration Figure 5A-3 (+)

d. Steel A446, grade a

$E = 30 \times 10^6$ psi

$f_{ds} = SIF \times DIF \times f_y = 1.21 \times 1.1 \times 33{,}000 = 44{,}000$ psi(Equation 5-26)

Step 2. Determine the equivalent static load

Say DLF = 1.0 and analyzing a one foot width of the panel

$w = \text{DLF} \times p \times b = 1.0 \times 5.0 \times 12 \times 12 = 720$ lb/ft

Step 3. Determine required ultimate moment capacities. For preliminary selection, assume

$M_{up} = M_{un} = wL^2/10.8 = 720 \times (4.5)^2/10.8 = 1{,}350$ lb-ft (Equation 5-30)

Figure 5A-3 Roof decking configuration and loading, Example 5A-3

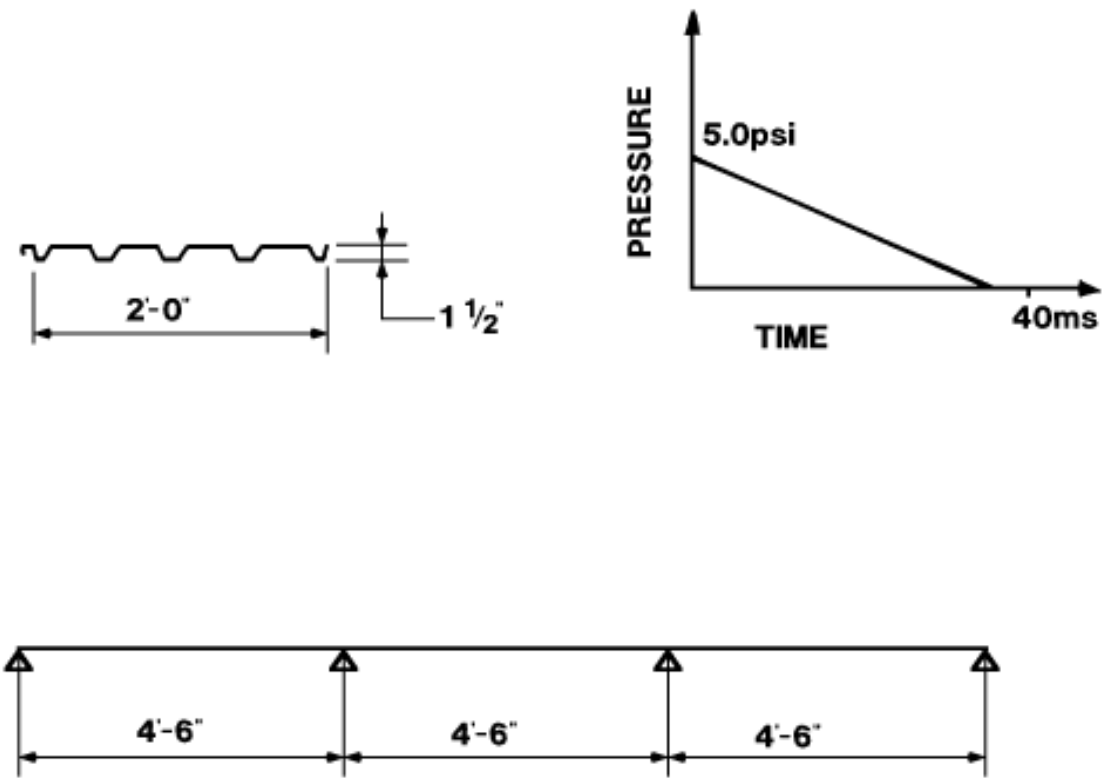

Step 4. Determine required section moduli.

$S^+ = S^- = (1350 \times 12)/44{,}000 = 0.368 \text{ in}^3$

(Select Section 3-18, 1-1/2 inches deep)

Step 5. Determine actual section properties for a one foot width of panel.

From manufacturer's guide:

$S^+ = 0.398 \text{ in}^3$

$S^- = 0.380 \text{ in}^3$

$I_{20} = 0.337 \text{ in}^4$

$w = 2.9$ psf

Step 6. Compute maximum unit resistance r_u.

$M_{up} = (44{,}000 \times 0.398)/12 = 1{,}459$ lb-ft (Equation 5-27)

$M_{un} = (44{,}000 \times 0.380)/12 = 1{,}393$ lb-ft (Equation 5-28)

$$r_u = 3.6\frac{M_{un} + 2M_{up}}{L^2} = 3.6\frac{1{,}393 + 2 \times 1{,}459}{4.5^2} = 766 \text{ lb/ft} \qquad \text{(Equation 5-30)}$$

Step 7. Determine equivalent static stiffness.

$$K_E = \frac{r_u L}{X_E} = \frac{EI_{20} \times r_u \times L}{0.0062 \times r_u \times L^4} = \frac{EI_{20}}{0.0062L^3} \qquad \text{(Equation 5-31)}$$

$$\frac{30^6 \times 10 \times 0.337}{0.0062 \times 4.5^3 \times 144} = 124{,}260 \text{ lb/ft}$$

Step 8. Compute the natural period of vibration for the 1-ft width of panel.

$mL = w/g = (2.9 \times 10^6 \times 4.5)/32.2 = 4.05 \times 10^5$ lb-ms^2/ft

$T_N = 2\times[(0.74 \times 4.05 \times 105)/124{,}260]^{1/2} = 9.75$ msec

Step 9. Calculate P/r_u and T/T_N

$P = p \times b = 5.0 \times 12 \times 12 = 720$ lb/ft

$P/r_u = 720/766 = 0.94$

$T/T_N = 40/9.75 = 4.10$

Entering Figure 3-64a (+) with these values.

$X_m/X_E = 3.5 < 6$ O.K.

Step 10. Check maximum deflection and rotation.

$X_E = r_u L/K_E = 766 \times 4.5/124{,}260 = 0.028$ ft

$X_m = 3.5\ X_E = 0.098$ ft

$\Theta = \tan^{-1}[X_m/(L/2)] = \tan^{-1}[0.098/2.25] = 2.5 < 4°$ O.K.

Step 11. Check resistance in rebound.

From Figure 5-13 (+), $\bar{r}/r = 0.33$; O.K. since available maximum elastic resistance in rebound is approximately equal to that under direct loading.

Step 12. Check resistance in shear.

a. Interior support (combined shear and bending). Determine dynamic shear capacity of a 1-ft width of panel:

$h = (1.500 - 2t)$ inches, $t = 0.048$ inch

$= 1.500 - 0.096 = 1.404$ inches

$h/t = 1.404/0.048 = 29.25 = 30$

f_{dv} = 10.84 ksi (Table 5-5 (+))

Total web area for 1-ft width of panel:

$(8 \times h \times t)/2 = 4 \times 1.404 \times 0.048 = 0.270 \text{ in}^2$

$V_u = 0.270 \times 10.84 = 2.92 \text{ k} = 2{,}922 \text{ lb}$

Determine maximum equivalent static shear force.

The maximum shear at an interior support of a continuous panel using limit design is:

$V_{max} = 0.55\, r_u L = 0.55 \times 766 \times 4.5 = 1{,}896 \text{ lb}$

$= 1{,}896 \text{ lb} < 2{,}922 \text{ lb}$ O.K.

b. End support (simple shear)

Determine dynamic shear capacity of a 1-ft width of panel:

For $h/t \leq 57$, $f_{dv} = 0.50\, f_{ds} = 0.5 \times 44.0 = 22.0$ ksi (Table 5-5a (+))

$V_u = 0.270 \times 22{,}000 = 5{,}940$

Determine maximum dynamic shear force:

The maximum shear at an end support of a continuous panel using limit design is

$V_{max} = 0.45 \times r_u \times L = 0.45 \times 766 \times 4.5$

$= 1{,}551 \text{ lb} < 5{,}940 \text{ lb}$ O.K.

c. Web crippling (4 webs per foot)

End support (N = 2-½ inches)

$Q_u = 1{,}200 \times 4 = 4{,}800 \text{ lb} > 1{,}551$ O.K. (Figure 5-15 (+))

Interior support (N = 5 inches)

$Q_u = (2{,}400 \times 4)/2 = 4{,}800 \text{ lb} > 1{,}896$ O.K. (Figure 5-16 (+))

PROBLEM 5A-4 DESIGN OF COLUMNS AND BEAM-COLUMNS

Problem: **Design a column or beam-column for axial load combined with bending about the strong axis**.

Procedure:

Step 1. Establish design parameters.

a. Bending moment M, axial load P, and shear V are obtained from either a preliminary design analysis or a computer analysis.

b. Span length l and unbraced lengths l_x and l_y.

c. Properties of structural steel:

Minimum yield strength f_y

Dynamic increase factor DIF (Table 5-2 (+))

Dynamic design strength f_{ds} (Equation 5-2)

Step 2. Select a preliminary member size with a section modulus S such that $S \geq M/f_{ds}$ and $b_f/2t_f$ complies with the structural steel being used (Section 5-24).

Step 3. Calculate P_y (Section 5-24) and the ratio P/P_y. Using either Equation 5-17 or 5-18, determine the maximum allowable d/t_w ratio and compare it to that of the section chosen. If the allowable d/t_w ratio is less than that of the trial section, choose a new trial section.

Step 4. Check the shear capacity of the web. Determine the web area A_w (Section 5-23) and the allowable dynamic shear stress f_{dv} (Equation 5-4). Calculate the web shear capacity V_p (Equation 5-16) and compare to the design shear V. If inadequate, choose a new trial section and return to Step 3.

Step 5. Determine the radii of gyration, r_x and r_y, and plastic section modulus, Z, of the trial section from the AISC Handbook.

Step 6. Calculate the following quantities using the various design parameters:

a. Equivalent plastic resisting moment

$M_p = f_{ds}Z$ (Equation 5-8)

b. Effective slenderness ratios Kl_x/r_x and Kl_y/r_y; for the effective length factor K, see appropriate Commentary on the AISC Specification and Section 5-38

c. Allowable axial stress F_a corresponding to the larger value of Kl/r

d. Allowable moment M_m from Equation 5-47 or 5-48

e. F'_e and "Euler" buckling load P_e (Section 5-37.3)

f. Plastic axial load (Section 5-37.3) and ultimate axial load P_u (Equation 5-42)

g. Coefficient C_m (AISC Specification)

Step 7. Using the quantities obtained in Step 6 and the applied moment M and axial load P, check the interaction formulas (Equations 5-44 and 5-45). Both formulas must be satisfied for the trial section to be adequate.

EXAMPLE 5A-4 (A)DESIGN OF A ROOF GIRDER AS A BEAM-COLUMN

Required: **Design a fixed-ended roof girder in a framed structure for combined bending and axial load in a low pressure range.**

Step 1. Given:

a. Preliminary computer analysis gives the following values for design:

M_x = 115 ft-kips

M_y = 0

P = 53.5 kips

V = 15.1 kips

b. Span length l_x = 17'-0"

Unbraced lengths l_x = 17'-0" and l_y = 17'-0"

c. A36 structural steel

f_y = 36 ksi

DIF = 1.29 (Table 5-2 (+))

SIF = 1.1 (Section 5-12.1)

$f_{ds} = DIF \times SIF \times f_y = 1.29 \times 1.1 \times 36 = 51.1$ ksi (Equation 5-2)

Step 2.

$S = M_x / f_{ds} = 115\ (12)/51.1 = 27.0\ \text{in}^3$

Try W 12 × 30 (S = 38.6 in^3)

$A = 8.79\ \text{in}^2$ $d/t_w = 47.5$

$b_f/2t_f = 7.4 < 8.5$ O.K. (Section 5-24)

Step 3.

$P_y = Af_y = 8.79 \times 36 = 316$ kips (Section 5-24)

$P/P_y = 53.5/316 = 0.169 < 0.27$

$$d/t_w = \frac{412}{f_y^{1/2}}\left(1 - 1.4\frac{P}{P_y}\right)$$ (Equation 5-17)

$= (412/(36)^{1/2})\ [1 - 1.4\ (0.169)] = 52.4 > 47.5$ O.K.

Step 4.

$V_p = f_{dv} A_w$ (Equation 5-16)

$f_{dv} = 0.55\ f_{ds} = 0.55\ (51.1) = 28.1$ ksi (Equation 5-4)

$A_w = t_w(d - 2t_f) = 0.260\ [12.34 - 2\ (0.440)] = 2.98\ \text{in}^2$ (Section 5-23)

$V_p = 28.1(2.98) = 83.7$ kips > 15.1 kips O.K.

Step 5. $r_x = 5.21$ in.

$r_y = 1.52$ in. (AISC Manual)

$Z = 43.1\ \text{in}^3$

Step 6.

a. $M_{px} = f_{ds} \times Z_x = 51.1 \times 43.1 \times 1/12 = 183.5$ ft-kips (Equation 5-8)

b. K = 0.75 (Section 5-39)

$Kl_x / r_x = [0.75(17)12] / 5.21 = 29$

$Kl_y / r_y = [0.75(17)12] / 1.52 = 101$

c. $F_a = 12.85$ ksi for $Kl_y / r_y = 101$ and $f_y = 36$ ksi

(AISC Specification)

$1.42(12.85) = 18.25$ ksi for $f_{ds} = 51.1$ ksi

d. $$M_{mx} = \left[1.07 - \frac{(l / r_y) f_{ds}^{1/2}}{3{,}160}\right] M_{px} \le M_{px}$$ (Equation 5-47)

$$= \left[1.07 - \frac{(204/152) \times 51.1^{1/2}}{3{,}160}\right] \times 183.5 = 140.6 < 183.5\,\text{ft} - \text{kips}$$

e. $$F'_{ex} = \frac{12\pi^2 E}{23(Kl_b / r_x)^2} = \frac{12\pi^2 \times 29{,}000}{23 \times 29^2} = 177.6\ \text{ksi}$$ (Section 5-37.3)

$$P_{ex} = \frac{23AF'_{ex}}{12} = \frac{23 \times 8.79 \times 177.6}{12} = 2{,}992\ \text{kips}$$ (Section 5-37.3)

f. $P_p = f_{ds} A = 51.1(8.79) = 449$ kips (Section 5-37.3)

$P_u = 1.7AF_a = 1.7(8.79)18.25 = 273$ kips (Equation 5-42)

g. $C = 0.85$ (AISC Specification)

Step 7. $$\frac{P}{P_u} + \frac{C_{mx} M_x}{(1 - P/P_{ex}) M_{mx}} + \frac{C_{my} M_y}{(1 - P/P_{ey}) M_{my}} \le 1$$ (Equation 5-44)

$$\frac{53.5}{273} + \frac{0.85 \times 115}{(1 - 53.5/2992) \times 140.6} = 0.196 + 0.708 = 0.904 < 1$$ O.K.

$$\frac{P}{P_p} + \frac{M_x}{1.18 M_{px}} + \frac{M_y}{1.18 M_{py}} \le 1$$ (Equation 5-45)

$$\frac{53.5}{449} + \frac{115}{1.18 \times 183.5} = 0.119 + 0.531 = 0.650 < 1$$ O.K.

Trial section meets the requirements of Section 5-37.3.

EXAMPLE 5A-4 (B) DESIGN OF COLUMN

Required: **Design of an exterior fixed-pinned column in a framed structure for biaxial bending plus axial loads in a low pressure range.**

Step 1. Given:

a. Preliminary design analysis of a particular column gives the following values at a critical section:

M_x = 311 ft-kips

M_y = 34 ft-kips

P = 76 kips

V = 54 kips

b. Span length l = 17'-3"

Unbraced lengths l_x = 17'-3" and l_y = 4'-0" (laterally supported by wall girts).

c. A36 structural steel

f_y = 36 ksi

DIF = 1.29 (Table 5-2 (+))

SIF = 1.1 (Section 5-12.1)

$f_{ds} = SIF \times DIF \times f_y = 1.1 \times 1.29 \times 36 = 51.1$ ksi (Equation 5-2)

Step 2.

$S = M_x/f_{ds} = 311(12)/51.1 = 73.0$ in^3

Try W 14 × 68 (S = 103 in^3)

A = 20.0 in^2 d/t_w = 33.8

$b_f/2t_f = 7.0 < 8.5$ O.K. (Section 5-24)

Step 3.

$P_y = Af_y = 20.0(36) = 720$ kips (Section 5-24)

$P/P_y = 76/720 = 0.106 < 0.27$

$d/t_w = [412/(f_y)^{1/2}]\,[1 - 1.4(P/P_y)]$ (Equation 5-17)

$= [412/(36)^{1/2}]\,[1 - 1.4(0.106)] = 58.5 > 32.9$ O.K.

Step 4.

$V_p = f_{dv} A_w$ (Equation 5-16)

$f_{dv} = 0.55\ f_{ds} = 0.55(51.1) = 28.1$ ksi (Equation 5-4)

$A_w = t_w(d - 2t_f) = 0.415\ [14.04 - 2(0.720)] = 5.23\ \text{in}^2$ (Section 5-23)

$V_p = 28.1(5.23) = 147$ kips > 54 kips O.K.

Step 5. $r_x = 6.01$ inches

$r_y = 2.46$ inches

$Z_x = 115\ \text{in}^3$ (AISC Manual)

$Z_y = 36.9\ \text{in}^3$

Step 6.

a. $M_p = f_{ds}Z$ (Equation 5-8)

$M_{px} = 51.1 \times 115 \times 1/12 = 490$ ft-kips

$M_{py} = 51.1 \times 36.9 \times 1/12 = 157$ ft-kips

b. Use $K = 1.5$ (Section 5-39)

$$\frac{Kl_x}{r_x} = \frac{1.5 \times 17.25 \times 12}{6.01} = 52$$

$$\frac{Kl_y}{r_y} = \frac{1.5 \times 4.00 \times 12}{2.46} = 29$$

c. $F_a = 18.17$ ksi for $Kl_x / r_x = 52$ and $f_y = 36$ ksi

$1.42(18.17) = 25.79$ ksi for $f_{ds} = 51.1$ ksi

$M_{mx} = M_{px} = 490$ ft-kips

d. $M_{my} = M_{py} = 157$ ft-kips (Section 5-37.3)

$$F'_{ex} = \frac{12\pi^2 E}{23(Kl_b / r_x)^2} = \frac{12\pi^2 \times 29{,}000}{23 \times 52^2} = 55.2\,\text{ksi}$$ (Section 5-37.3)

$$F'_{ey} = \frac{12\pi^2 E}{23(Kl_b / r_y)^2} = \frac{12\pi^2 \times 29{,}000}{23 \times 29^2} = 178\ \text{ksi}$$ (Section 5-37.3)

$$P_{ex} = \frac{23AF'_{ex}}{12} = \frac{23 \times 20.0 \times 55.2}{12} = 2{,}116\ \text{kips}$$

$$P_{ey} = \frac{23AF'_{ey}}{12} = \frac{23 \times 20.0 \times 178}{12} = 6{,}823\text{kips}$$ (Section 5-37.3)

$P_p = f_{ds}A =$ 51.1(20) = 1,022 kips

$P_u = 1.7AF_a =$ 1.7(20)25.79 = 877 kips

$C_{mx} = C_{my} = 0.85$ (AISC Specification)

Step 7. $$\frac{P}{P_u} + \frac{C_{mx}M_x}{(1 - P/P_{ex})M_{mx}} + \frac{C_{my}M_y}{(1 - P/P_{ey})M_{my}} \le 1$$ (Equation 5-44)

$$\frac{76}{877} + \frac{0.85 \times 311}{(1 - 76/2116) \times 490} + \frac{0.85 \times 34}{(1 - 76/6823) \times 157}$$
$$= 0.087 + 0.560 + 0.186 = 0.833 < 1 \quad \text{O.K.}$$

$P/P_p + M_x/(1.18M_{px}) + M_y/(1.18M_{py}) \le 1$ (Equation 5-45)

76/1022 + 311/[1.18(490)] + 34/[1.18(157)]

= 0.074 + 0.538 + 0.183 = 0.795 < 1 O.K.

Trial section meets the requirements of Section 5-37.3

PROBLEM 5A-5 DESIGN OF OPEN-WEB STEEL JOISTS

Problem: **Analysis or design of an open-web joist subjected to a pressure-time loading.**

Procedure:

Step 1. Establish design parameters

a. Pressure-time curve

b. Clear span length and joist spacing

c. Minimum yield stress f_y for chord and web members

Dynamic increase factor, *DIF* (Table 5-2 (+))

d. Design ductility ratio, μ, and maximum end rotation, Θ.

e. Determine whether joist design is controlled by maximum end reaction.

Step 2. Select a preliminary joist size as follows:

a. Assume a dynamic load factor (Section 5-22.3)

b. Compute equivalent static load on joist due to blast overpressure

$w_1 = \text{DLF} \times p \times b$

(Dead load of joist and decking not included)

c. Equivalent service live load on joist

$w_2 = w_1/1.7 \times SIF \times DIF$ (Section 5-33)

d. From "Standard Load Tables" adopted by the Steel Joist Institute, select a joist for the given span and the structural steel being used, with a allowable design load (dead load of joist and decking excluded) equal to or greater than w_2, check whether ultimate capacity of joist is controlled by flexure or by shear

Step 3. Find the resistance of the joist by multiplying the allowable design load by $1.7 \times SIF \times DIF$ (Section 5-33)

Step 4. Calculate the stiffness of the joist, K_E, using Table 3-8 (+). Determine the equivalent elastic deflection X_E given by

$X_E = r_u L/K_E$

Step 5. Determine the effective mass using the weight of the joist with its tributary area of decking, and the corresponding load-mass factor given in Table 3-12 (+) of Chapter 3.

Calculate the natural period of vibration, T_N.

Step 6. Follow procedure outlined in Step 6a or 6b depending on whether the joist capacity is controlled by flexure or by shear.

Step 6a. Joist design controlled by flexure.

a. Find ductility ratio $\mu = X_m/X_E$ from the response charts in Chapter 3, using the values of T/T_N and P/r_u.

b. Check if the ductility ratio and maximum end rotation meet the criteria requirements outlined in Section 5-35.

If the above requirements are not satisfied, select another dynamic load factor and repeat Steps 2 to 5.

c. Check the selection of the dynamic increase factor used in Step 2c. Using the response charts, find t_E to determine the strain rate, ε in Equation 5-1. Using Figure 5-2 (+), determine DIF.

d. Check if the top chord meets the requirements for a beam-column (Section 5-37.3)

Step 6b. Joist design controlled by shear.

a. Find ductility ratio $\mu = X_m/X_E$ from the response charts in Chapter 3, using the values of T/T_N and P/r_u.

b. If $\mu \leq 1.0$, design is O.K.

If $\mu > 1.0$, assume a higher dynamic load factor and repeat Steps 2 to 5. Continue until $\mu \leq 1.0$. Check end rotation, Θ, against design criteria.

c. Check the selection of the dynamic increase factor used in Step 2c, using the value of T/T_N and the appropriate elastic response chart in Section 3-19.3.

d. Since the capacity is controlled by maximum end reaction, it will generally not be necessary to check the top chord as a beam-column. However, when such a check is warranted, the procedure in Step 6a can be followed.

Step 7. Check the bottom chord for rebound.

a. Determine the required resistance, $\bar{r}$, for elastic behavior in rebound.

b. Compute the bending moment, M, and find the axial forces in top and bottom chords using $P = M/d$ where d is taken as the distance between the centroids of the top and bottom chord sections.

c. Determine the ultimate axial load capacity of the bottom chord considering the actual slenderness ratio of its elements.

$P_u = 1.7AF_a$

where F_a is defined in Section 5-37.3.

The value of F_a can be obtained by using either Equation 5-43 or the tables in the AISC Specification which give allowable stresses for compression members. When using these tables, the yield stress should be taken equal to f_{ds}.

d. Check if $P_u > P$.

Determine bracing requirements.

EXAMPLE 5A-5 (A) DESIGN OF AN OPEN-WEB STEEL JOIST

Required: **Design a simply-supported open-web steel joist whose capacity is controlled by flexure.**

Solution:

Step 1. Given:

a. Pressure-time loading (Figure 5A-4 (+))

b. Clear span = 50'-0"

Spacing of joists = 7'-0"

Weight of decking = 4 psf

c. Structural steel properties

Chords f_y = 50,000 psi

Web f_y = 36,000 psi

Dynamic increase factor (chords only).

DIF = 1.19 (Table 5-2 (+), for A588)

Dynamic design stress, $f_{ds} = DIF \times SIF \times f_y$ (Equation 5-2)

Chords $f_{ds} = 1.19 \times 1.1 \times 50{,}000 = 65{,}450$ psi

d. Design criteria (Section 5-35)

Maximum ductility ratio: μ_{max} = 4.0

Maximum end rotation: Θ_{max} = 2°

Figure 5A-4 Joist Cross-Section and Loading, Example 5A-5(a)

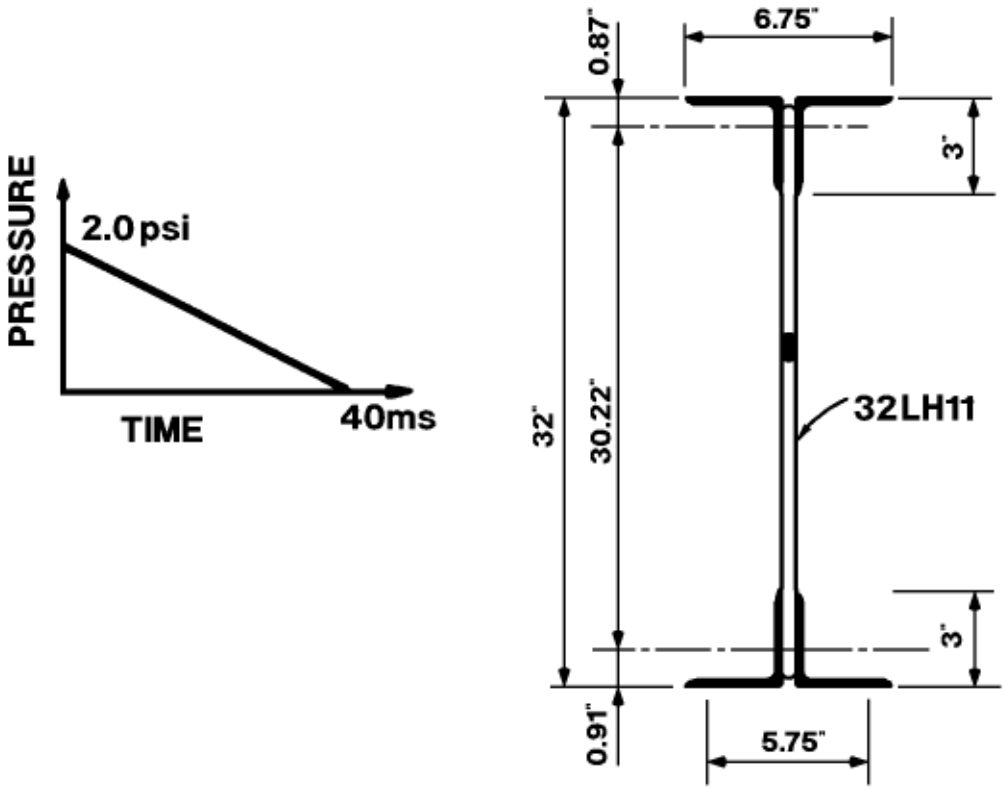

Step 2. Selection of joist size

a. Assume a dynamic load factor. For preliminary design, a DLF = 1.0 is generally recommended. However, since the span is quite long in this case, a DLF of 0.62 is selected.

b. Equivalent static load on joist:

$w_1 = 0.62 \times 2.0 \times 144 \times 7.0 = 1{,}250$ lb/ft

c. Corresponding allowable design load on joist:

$w_2 = w_1/(1.7 \times 1.19 \times 1.1) = 1{,}250/2.23 = 561$ lb/ft

d. Using the "Standard Specifications, Load Tables and Weight Tables" of the Steel Joist Institute, for a span of 50'-0", try 32LH11. Joist tables show that capacity is controlled by flexure.

Total load-carrying capacity (including dead load) = 602 lb/ft

Approximate weight of joist and decking

$= 28 + (4 \times 7) = 56$ lb/ft

Total allowable loadcapacity (excluding dead load) = 602 - 56 = 546 lb/ft

The following section properties refer to the selected joist 32LH11 (Figure 5A-4 (+)):

Top Chord:

Two 3 × 3 × 5/16 angles

A = 3.56 in^2

r_x = 0.92 in

r_y = 1.54 in

I_x = 3.02 in^4

Bottom Chord:

Two 3 × 2-1/2 × 1/4 angles

A = 2.62 in^2

r_x = 0.945 in

r_y = 1.28 in

I_x = 2.35 in^4

I_{xx} for joist = 1,383.0 in^4

Panel length = 51 inches

Note: If the moment of inertia for the joist (I_{xx}) is not available, it may be estimated from the load causing a given deflection to span ratio (i.e. midspan deflection equal to L/240) stated in the "Standard Specifications, Load Tables and Weight Tables" for the given joist size and span, the corresponding midspan deflection, the elastic modulus for steel, and the theoretical deflection equation for a beam in flexure with simple supports. However, care should be taken for short spans where the allowable load in the "Standard Specifications, Load Tables and Weight Tables" may not be not controlled by flexural response.

Step 3. Resistance per unit length

r_u = 1.7 × 1.19 × 1.1 × 546 = 1215 lb/ft (Section 5-33)

Step 4. $$K_E = \frac{384EI}{5L^3} = \frac{384 \times 29 \times 10^6 x1383}{5 \times (12 \times 50)^3} = 14{,}260 \text{ lb/in}$$ (Table 3-8 (+))

$$X_E = \frac{r_u L}{K_E} = \frac{1215 \times 50}{14260} = 4.26 \text{ inches}$$

Step 5. Total mass of joist plus decking

$$M = \frac{56 \times 50 \times 10^6}{386} = 7.25 \times 10^6 \text{ lb} - \text{ms}^2/\text{in}$$

Total effective mass $M_e = K_{LM}M$

K_{LM} = 0.5(0.78 + 0.66) = 0.72 (Table 3-12 (+))

M_e = 0.72 (7.25 × 10^6) = 5.22 × 10^6 lb-ms^2/in

Natural period $T_N = 2\pi(M_e/K_E)^{1/2} = 2\pi(5{,}220{,}000/14{,}260)^{1/2}$ = 120.2 ms

Behavior controlled by flexure. Use Step 6a.

Step 6a.

a. T/T_N = 40/120.2 = 0.332

$$\frac{P}{r_u} = \frac{2.0 \times 144 \times 7}{1{,}215} = 1.66$$

From Figure 3-64a (+),

$\mu = X_m / X_E$ = 1.6< 4 O.K.

b. X_m = 1.6 × 3.87 = 6.2inches

tan $\Theta = X_m/(L/2)$ = 6.2/(25 × 12) = 0.021

Θ = 1.2° < 2° O.K.

c. Check selection of DIF.

From Figure 3-64a (+), for μ = 1.6and T/T_N = 0.33

t_E/T = 0.65, t_E = 0.65 × 40 = 26 ms

Find $\dot{\varepsilon}$

$$\dot{\varepsilon} = f_{ds} / E_s t_E = 65.45 / 30 \times 10^3 \times .0.026 = 0.117 \text{ in/in/sec}$$ (Equation 5-1)

From Figure 5-2 (+) (average of A36 and A514)

DIF = 1.18 = 1.19 assumed O.K.

d. Check top chord as a beam column.

Maximum moment at mid-span

$$M = \frac{r_u L^2}{8} = \frac{1{,}105 \times 50^2 \times 12}{8 \times 1{,}000} = 4{,}144 \text{ in} - \text{kips}$$

Maximum axial load in chords

$P = M/d$

d = distance between centroids of top and bottom chords (see Figure 5A-4 (+))

= 30.22 inches

P = 4,144/30.22 = 137.1 kips

l = panel length = 51 inches

Slenderness ratio, l/r_x = 51/0.92 = 55.4 < C_c

where $C_c = (2\pi^2 E/f_{ds})^{1/2} = 95$ (Equation 5-41)

F_a = 23.5 ksi for f_y = 50 ksi (AISC Specification)

1.31 (23.5) = 30.8 ksi for f_{ds} = 65,450 psi

$P_u = 1.7AF_a = 1.7 \times 3.56 \times 30.8 = 186.4$ kips (Equation 5-42)

Considering the first panel as a fixed, simply supported beam, the maximum moment in the panel is

$$M = \frac{r_u L^2}{12} = \frac{1{,}105 \times 51^2}{12 \times 12 \times 1000} = 19.96 \text{ in} - \text{kips}$$

The effective slenderness ratio of the top chord in the first panel is

$Kl_b/r_x = (1.0 \times 51)/0.92 = 55.4$

$$F'_{ex} = \frac{12\pi^2 E}{23(Kl_b / r_x)^2} = \frac{12\pi^2 \times 29{,}000}{23 \times 55.4^2} = 48.7 \text{ ksi}$$

$P_{ex} = (23/12)AF'_{ex} = 23/12 \times 3.56 \times 48.7 = 333$ kips

$(1 - P/P_{ex}) = (1.0 - 126.6/333) = 0.62$

To determine M_m, the plastic moment M_p is needed and the value of Z_x has to be computed. The neutral axis for a fully plastic section is located at a distance x from the flange.

$$3\bar{x} = \left(3 - \frac{5}{16}\right)\frac{5}{16} + 3\left(\frac{5}{16} - \bar{x}\right)$$
$$= (43 \times 5)/(16 \times 16) + 15/16 - 3\bar{x}$$
$$\bar{x} = 455/(6 \times 256) = 0.296\text{inch}$$

The plastic section modulus, Z_x, is found to be

$$Z_x = 2\left[\frac{0.296^2}{2} \times 3 + (3.0 - 0.3125) \times \frac{(0.3125 - 0.296)^2}{2} + \frac{(3 - 0.296)^2}{2} \times 0.3125\right]$$
$$= 0.263 + 0.0007 + 2.285 = 2.549 in^3$$

$M_{px} = f_{ds}Z_x$ = 65.45 × 2.549 = 166.8 in-kips (Equation 5-8)

$$M_{mx} = \left[1.07 - \frac{(l/r_y)f_{ds}^{1/2}}{3160}\right]M_{px} \le M_{px}$$ (Equation 5-47)

where r_y is least radius of gyration = 0.92

= [1.07 - (55.4/391)] 166.8 = 154.8 in-kips

C_m = 0.85 (AISC Specification)

$P/P_u + C_mM/[(1 - P/P_{ex})M_{mx}] \le 1.10$ (Equation 5-44)

$$\frac{137.1}{186.4} + \frac{0.85 \times 19.96}{0.62 \times 154.8} \le 1.0 = 0.736 + 0.176 = 0.912 < 1.0$$ O.K.

Step 7. Check bottom chord for rebound.

a. Calculate required resistance in rebound.

T/T_N = 0.33

From Figure 5-13 (+), 100% rebound

$$\bar{r}/r_u = 1.0$$
$$\bar{r} = r_u = 1{,}105 \text{ lb/ft}$$

b. Moment and axial forces in rebound

$$M = \frac{\bar{r}L^2}{8} = 4{,}144 \text{ in} - \text{kips}$$

Maximum axial force in bottom chord

$P = M/d$ = 137.1 kips (compression)

c. Ultimate axial load capacity

Stability in vertical direction (about x-axis)

l = 51 inches r_x = 0.945

l/r = 51/0.945 = 54.0 < C_c

where $C_c = [(2\pi^2 E)/f_{ds}]^{1/2}$ = 95

F_a = 23.72 ksi for f_y = 50 ksi (AISC Specification)

1.31(23.72) = 31.1 ksi for f_{ds} = 65,450 psi

$P_u = 1.7AF_a = 1.7 \times 2.62 \times 31.1 = 138.5$ kips

d. Check bracing requirements.

P = 137.1 < P_u = 138.5 O.K.

Adding a vertical member between panel joints of bottom chord would have been required had $P > P_u$. This additional bracing would have been needed in mid-span but may be spared at the joist ends.

Stability in the lateral direction (about y-axis)

P_u = 137.1 kips

r_y = 1.28 inches, A = 2.62 in^2

$F_a = P_u/(1.7 \times 1.31A) = 137.1/(1.7 \times 1.31 \times 2.62) = 23.5$ ksi

For a given F_a = 23.5, the corresponding slenderness ratio is

$l/r \approx 55$ (AISC Specification)

Therefore, the maximum unbraced length in mid-span is

$l_b = 55 \times 1.28 = 70.4$ inches

Use lateral bracing at panel points, i.e., 51 inches at midspan. The unbraced length may be increased at joist ends, but not greater than specified for bridging requirements in the joist specification.

EXAMPLE 5A-5 (B) ANALYSIS OF EXISTING OPEN-WEB STEEL JOIST

Required: **Analyze a simply supported, open-web steel joist whose capacity is controlled by shear.**

Solution:

Step 1. Given:

a. Pressure-time loading [Figure 5A-5 (+)]

Joist 22H11

b. Clear span = 32'-0"

Spacing of joists = 6'-0"

Weight of decking = 4 psf

Figure 5A-5 Joist Cross-Section and Loading, Example 5A-5(b)

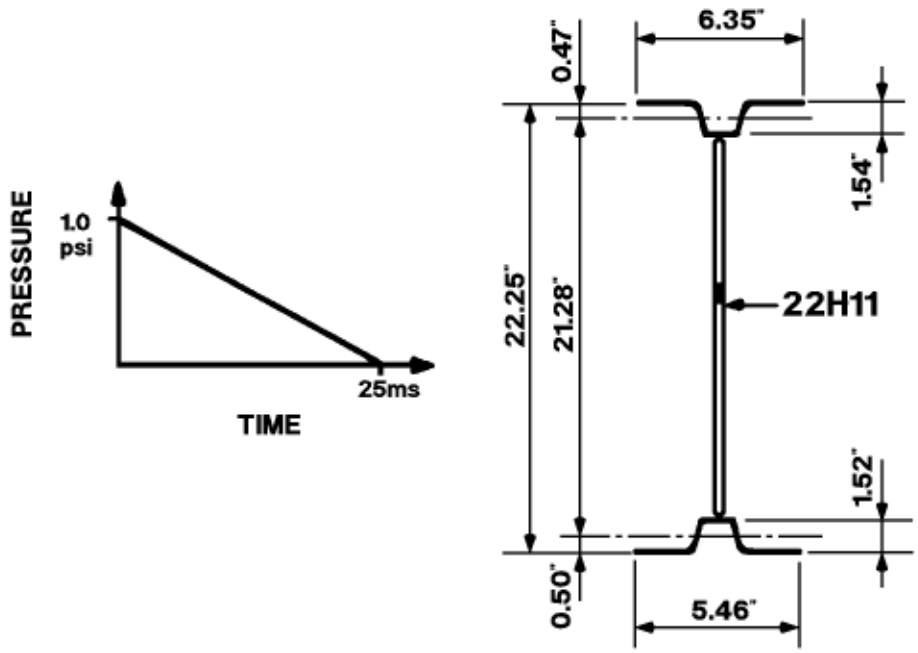

c. Properties of structural steel:

Chords	f_y = 50,000 psi	
Web	f_y = 36,000 psi	
Dynamic increase factor		
(chords only)	DIF = 1.19	(Table 5-2 (+) for A588)
Dynamic design stress	$f_{ds} = DIF \times SIF \times f_y$	

Chords $f_{ds} = 1.19 \times 1.1 \times 50{,}000 = 65{,}450$ psi

d. Design criteria (Section 5-35)

For members controlled by shear:

$\mu_{max} = 1.0$

$\Theta_{max} = 1°$

Step 2.

a. Assume the DLF = 1.25

b. Overpressure load on joist

$w_1 = 1.25 \times 1.0 \times 144 \times 6 = 1{,}080$ lb/ft

c. Equivalent service load

$w_2 = w_1/1.7 \times SIF \times DIF = 1{,}080/2.23 = 485$ lb/ft

d. From the "Standard Specifications and Load Tables" of the Steel Joist Institute:

Total allowable load capacity (including dead load) = 506 lb/ft.

Approximate weight of joist plus decking =

$17 + (6 \times 4) = 41$ lb/ft

Total allowable load capacity (excluding dead load) =

506 - 41 = 465

From the steel joist catalog, the following are the section properties of Joist 22H11 (Figure 5A-5 (+)):

Panel length = 24 inches

Top Chord:

$A = 1.935$ in^2

$I_x = 0.455$ in^4

$r_x = 0.485$ in

$r_y = 1.701$ in

Bottom Chord:

$A = 1.575$ in^2

I_x = 0.388 in^4

r_x = 0.497 in

r_y = 1.469 in

I_{xx} for joist = 396.0 in^4

Step 3. Resistance per unit length

r_u = 2.23 × 465 = 1,035 lb/ft

Step 4. $$K_E = \frac{384EI}{5L^3} = \frac{384 \times 29 \times 10^6 \times 396}{5 \times (12 \times 32)^3} = 15{,}580 \text{ lb/in}$$ (Table 3-8 (+))

$$X_E = \frac{r_u L}{K_E} = \frac{1035 \times 32}{15580} = 2.13 \text{ inches}$$

Step 5. Mass of joist plus decking

$$M = \frac{41 \times 32 \times 10^6}{386} = 3.4 \times 10^6 \text{ lb} - \text{ms}^2/\text{in}$$

Effective mass $M_e = K_{LM} M$

= 0.78 × 3.4 × 10^6 = 2.65 × 10^6 lb-ms^{2}in

Natural period $T_N = 2\pi(M_e/K_E)^{1/2}$

= $2\pi(2650000/15580)^{1/2}$ = 81.8 ms

Behavior controlled by shear. Use Step 6b of the procedure.

Step 6b.

a. T/T_N = 25/81.8 = 0.305

$$\frac{P}{r_u} = \frac{6 \times 144 \times 1.0}{1{,}035} = 0.835$$

b. From Figure 3-64a (+) of Chapter 3:

$\mu = X_m/X_E$ < 1.0; elastic, O.K.

tan $\Theta = X_m/(L/2)$

= 2.13/(16.0 × 12) = 0.0111

Θ = 0.64° < 1° O.K.

c. Check selection of DIF from Figure 3-49 (+) of Chapter 3, for $T/T_N = 0.305$, $t_m/T = 1.12$; $t_m = 1.12 \times 25 = 28$ ms

Find $\dot{\varepsilon}$

$$\dot{\varepsilon} = f_{ds} / E_s t_E \qquad (t_E = t_m) \qquad \text{(Equation 5-1)}$$

$= 65.45/30 \times 10^3 \times 0.028 = 0.078$ in/in/sec

From Figure 5-2 (+) (average of A36 and A514)

DIF = 1.18 = 1.19 assumed, O.K.

d. Check of top chord as a beam-column is not necessary.

Step 7. Check bottom chord in rebound.

a. For $\mu = 1$ and $T/T_N = 0.305$, rebound is 100% (Figure 5-13 (+))

$\bar{r} = r_u$

b. Determine axial load in bottom chord, $P = M/d$.

For an elastic response, $\mu < 1.0$, where $T/T_N = 0.305$, the DLF = 0.87 (Figure 3-49 (+))

Equivalent static load, w

$w = \text{DLF} \times b \times p = 0.87 \times 12 \times 12 \times 6 \times 1.0 = 751$ lb/ft

Maximum moment in rebound, $M = wL^2/8$

$M = [751 \times (32)^2/8]\ 12 = 1{,}155{,}000$ in-lb

$P = M/d = 1{,}155{,}000/21.28 = 54{,}300$ lb = 54.3 kips

c. Check bracing requirements.

(1) Vertical bracing of bottom chord:

Panel length = 24 inches

$r_x = 0.497$, $r_y = 1.469$, $A = 1.575$ in^2

$l/r_x = 24/0.497 = 48.3$

Allowable $P = 1.7 \times SIF \times DIF \times A \times F_a$

$= 1.7 \times 1.1 \times 1.19 \times 1.575 \times 24.6 = 86.2$ kips > 54.3 kips

(F_a from AISC Specification)

No extra bracing required.

(2) Lateral bracing of bottom chord:

P = 54.3 kips, A = 1.575 in^2

$F_a = P/1.7A = 54.3/(1.7 \times 1.575 \times 1.1 \times 1.19) = 15.5$ ksi

For f_y = 50 ksi and F_a = 15.5 ksi

$l/r = 96$

$l = 96 \times 1.469 = 141$ inches

(l/r from AISC Specification)

Therefore, use lateral bracing at every fifth panel point close to mid-span. The unbraced length may be increased at joist ends, but not greater than specified for bridging requirements in the joist specification.

PROBLEM 5A-6 DESIGN OF SINGLE-STORY RIGID FRAMES FOR PRESSURE-TIME LOADING

Problem: **Design a single-story, multi-bay rigid frame subjected to a pressure-time loading.**

Procedure:

Step 1. Establish the ratio α between the design values of the horizontal and vertical blast loads.

Step 2. Using the recommended dynamic load factors presented in Section 5-41.3 establish the magnitude of the equivalent static load *w* for:

a. Local mechanisms of the roof and blastward column

b. Panel or combined mechanisms for the frame as a whole.

Step 3. Using the general expressions for the possible collapse mechanisms from Table 5-13 (+) and the loads from Step 2, assume values of the moment capacity ratios C and C_1 and proceed to establish the required design plastic moment M_p considering all possible mechanisms. In order to obtain a reasonably economical design, it is desirable to select C and C_1 so that the least resistance (or the required value of M_p) corresponds to a combined mechanism. This will normally require several trials with assumed values of C and C_1.

Step 4. Calculate the axial loads and shears in all members using the approximate method of Section 5-41.4.

Step 5. Design each member as a beam-column using the ultimate strength design criteria of Sections 5-37.3, 5-38, and 5-39. A numerical example is presented in Problem 5A-4.

Step 6. Using the moments of inertia from Step 5, calculate the sidesway natural period using Table 5-14 (+) and Equations 5-50 and 5-51. Enter the response charts in Chapter 3 with the ratios of T/T_N and P/R_u. In this case, P/R_u is the reciprocal of the panel or sidesway mechanism dynamic load factor used in the trial design. Multiply the ductility ratio by the elastic deflection given by Equation 5-53 and establish the peak deflection X_m from Equation 5-54. Compare the maximum sidesway deflection X_m with the criteria of Section 5-35. Note that the sidesway deflection δ in Table 5-8 (+) is X_m.

Step 7. Repeat the procedure of Step 6 for the local mechanisms of the roof and blastward column. The stiffness and natural period may be obtained from Table 3-8 (+) of Chapter 3 and Equation 5-15, respectively. The resistance of the roof girder and the blastward column may be obtained from Table 5-

13 (+) using the values of M_p and CM_p determined in Step 3. Compare the ductility ratio and rotation with the criteria of Section 5-35.

Step 8.

a. If the deflection criteria for both sidesway and beam mechanisms are satisfied, then the member sizes from Step 5 constitute the results of this preliminary design. These members would then be used in a more rigorous dynamic frame analysis. Several computer programs are available through the repositories listed in Section 5-4.

b. If the deflection criterion for a sidesway mechanism is exceeded, then the resistance of all or most of the members should be increased.

c. If the deflection criterion for a beam mechanism of the front wall or roof girder is exceeded, then the resistance of the member in question should be increased. The member sizes to be used in a final analysis should be the greater of those determined from Steps 8b and 8c.

EXAMPLE 5A-6 DESIGN OF A RIGID FRAME FOR PRESSURE-TIME LOADING

Required: **Design a four-bay, single-story, reusable, pinned-base rigid frame subjected to a pressure-time loading in its plane.**

Given:

a. Pressure-time loading (Figure 5A-6 (+))

b. Design criteria: It is required to design the frame structure for more than one incident. The deformation limits shall be half that permitted for personnel protection, that is:

δ = H/50 and

Θ_{max} = 1° for individual members

c. Structural configuration (Figure 5A-6 (+))

d. A36 steel

e. Roof purlins spanning perpendicular to frame ($b_v = b_n$, Figure 5-26 (+))

f. Frame spacing, b = 17 ft

g. Uniform dead load of deck, excluding frame

Roof dead load = w_{dr} = 13.5 psf

Wall dead load = w_{dw} = 16.5 psf

Step 1. Determine α: (Section 5-41.1)

$b_h = b_v$ = 17 ft

$q_h = 5.8 \times 17 \times 12$ = 1,183 lb/in

$q_v = 2.5 \times 17 \times 12$ = 510 lb/in

$\alpha = q_h/q_v$ = 2.32

Figure 5A-6 Preliminary Design of Four-Bay, Single-Story Rigid Frame, Example 5A-6

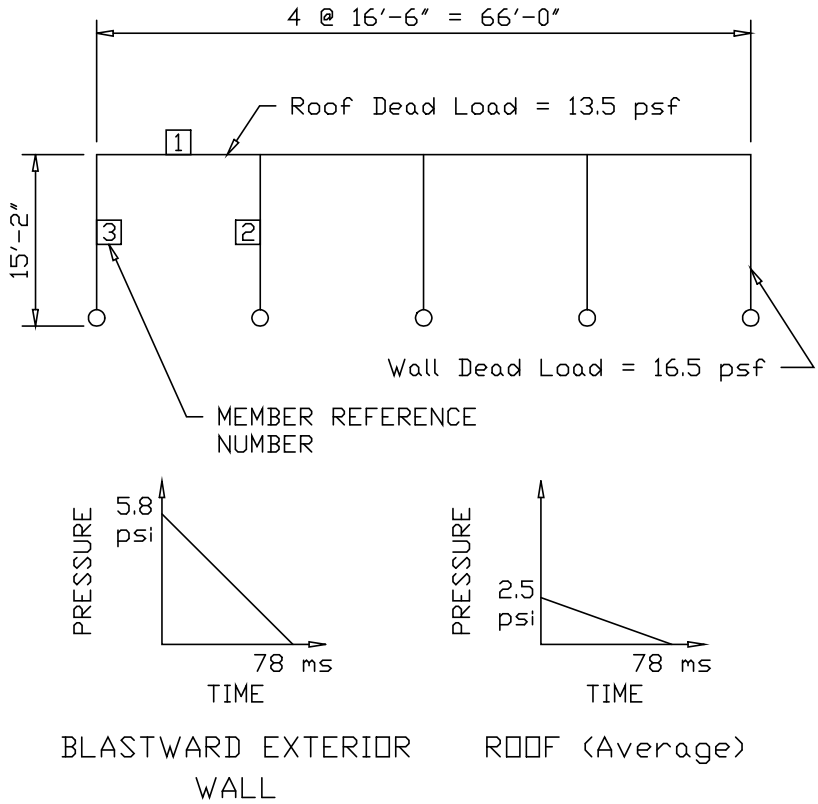

Step 2. Establish equivalent static loads (Section 5-41.3)

a. Local beam mechanism, $w = \text{DLF} \times q_v$

$$w = \frac{1.25 \times 510 \times 12}{1{,}000} = 7.65 \text{ k/ft}$$

b. Panel or combined mechanism, $w = \text{DLF} \times q_h$

$$w = \frac{0.625 \times 510 \times 12}{1{,}000} = 3.83 \text{ k/ft}$$

Step 3. The required plastic moment capacities for the frame members are determined from Table 5-13 (+) based upon rational assumptions for the moment capacity ratios C_1 and C. In general, the recommended starting values are C_1 equal to 2 and C greater than 2. From Table 5-13, for n = 4, α = 2.32, H = 15.167 ft, L = 16.5 ft and pinned bases, values of C_1 and C were substituted and after a few trials, the following solution is obtained:

M_p = 130 kip-ft, C_1 = 2.0 and C = 3.5.

The various collapse mechanisms and the associated values of M_p are listed below:

Collapse Mechanism	w (k/ft)	M_p (k-ft)
1	7.65	130
2	7.65	128
3a, 3b	3.83	128
4	3.83	129
5a, 5b	3.83	110
6	3.83	116

The plastic design moments for the frame members are established as follows:

Girder, M_p = 130 k-ft

Interior column, C_1M_p = 260 k-ft

Exterior column, CM_p = 455 k-ft

Step 4.

a. Axial loads and shears due to horizontal blast pressure.

w = 3.83 k/ft

From Figure 5-27 (+), $R = \alpha wH = 2.32 \times 3.83 \times 15.167 = 135$ kips

1. Member 1, axial load

   $P_1 = R/2 = 67$ kips

2. Member 2, shear force

   $V_2 = R/2(4) = 135/8 = 16.8$ kips

3. Member 3, shear force

   $V_3 = R/2 = 67$ kips

b. Axial loads and shears due to vertical blast pressure,

w = 7.65 k/ft

1. Member 1, shear force

$V_1 = w \times L/2 = 7.65 \times 16.5/2 = 63.1$ kips

2. Member 2, axial load

$P_2 = w \times L = 7.65 \times 16.5 = 126.2$ kips

3. Member 3, axial load

$P_3 = w \times L/2 = 63.1$ kips

Note:
The dead loads are small compared to the blast loads and are neglected in this step.

Step 5. The members are designed using the criteria of Sections 5-37.3, 5-38, and 5-39 with the following results:

Member	M_p (k-ft)	P (k)	V (k)	Use	I_x (in^4)
1	130	67.0	63.1	w12x35	285
2	260	126.2	16.8	w14x61	640
3	455	63.1	67.0	w14x74	796

Step 6. Determine the frame stiffness and sway deflection.

$$I_{ca} = \frac{(3 \times 640) + (2 \times 796)}{5} = 702 \text{ in}^4$$ (Table 5-14 (+))

I_g = 285 in^4

$ß = 0$

$$D = \frac{I / L_g}{0.75 I_{ca} / H} = \frac{285/16.8}{0.75(702/15.167)} = 0.498$$ (Table 5-14)

C_2 = 4.65

$$K = \frac{E I_{ca} C_2}{H^3}\left[1 + (0.7 - 0.1\beta)(n-1)\right]$$ (Table 5-14)

$$= \frac{30 \times 10^3 \times 702 \times 4.65 \times [1 + 0.7(3)]}{(15.167 \times 12)^3} = 50.2 \text{ k/in}$$

K_L = 0.55 (1 - 0.25*ß*) = 0.55 (Equation 5-51)

Calculate dead weight, *W*:

$W = b[(4Lw_{dr}) + (1/3)(Hw_{dw})] + (35 \times 66)$

$+ 1/3\ (15.167)\ [(3 \times 61) + (2 \times 74)] = 20{,}548$ lb

$m_e = W/g = 20{,}548/32.2 = 638$ lb-sec^2/ft $= 638 \times 10^6$ lb-ms^2/ft

$T_N = 2\pi[m_e/KK_L]^{1/2}$ (Equation 5-50)

$= 2\pi[(638 \times 10^6)/(50.2 \times 12 \times 10^3 \times 0.55)]^{1/2} = 276$ ms

$T/T_N = 78/276 = 0.283$

$P/R_u = 1.6$

$\mu = X_m/X_E = 1.40$ (Figure 3-54 (+) or Figure 3-64a (+))

$$X_E = \frac{R_u}{K_E} = \frac{\alpha wH}{K_E} = \frac{2.32 \times 3.83 \times 15.167}{50.2} = 2.68 \text{ inches}$$

(Equation 5-52 and 5-53)

$X_m = \delta = 1.40 \times 2.68 = 3.75$ inches (Equation 5-54)

$\delta = [3.75/(15.167 \times 12)] \times H = 0.0206H = H/48.5$

Step 7. Check deflection of possible local mechanisms.

a. Roof girder mechanism (investigate W12 × 35 from Step 5)

$T_N = 2\pi\,(m_e/K_E)^{1/2}$ (Equation 5-15)

$m_e = K_{LM} \times m$

For an elasto-plastic response, take the average load-mass factor for the plastic and elastic response, or:

$K_{LM} = (0.77 + 0.66)/2 = 0.715$ (Table 3-12 (+))

$m = W/g$

$w = w_{dw}\,b$ + girder self weight = (13.5 × 17) + 35 = 265 lb/ft

$W = w \times L = 265 \times 16.5 = 4372$ lb.

$m_E = 0.715 \times 4372/386.4 = 8.1$ lb-sec^2/in.

$K_E = 307\ EI/L^3$ (Table 3-8 (+))

$$K_E = \frac{307 \times 30 \times 10^6 \times 285}{(16.5 \times 12)^3} = 332000 \text{ lb/in}$$

$T_N = 2\pi\ (8.1/332000)^{1/2} \times 1000 = 31.0$ ms

$T/T_N = 78/31.0 = 2.52$

$R_u = 16M_p/L = (16 \times 130)/16.5 = 126$ kips (Table 5-13 (+))

$P = pbL = (2.5)\ (17)\ (144)\ (16.5)/1000 = 101$ kips

$P/R_u = 101/126 = 0.80$

$\mu = X_m/X_E = 1.80$ (Figure 3-54 (+) or Figure 3-64a (+))

Check end rotation of girder.

$X_E = R_u/K_E = 126/332 = 0.380$ inch

$X_m = 1.80 \times 0.380 = 0.69$ inch

$X_m/(L/2) = 0.69/[(8.25)\ (12)] = 0.0069 = \tan \Theta$,

$\Theta = 0.40° < 1°$ O.K.

b. Exterior column mechanism (investigate W14 × 74 from Step 5).

$T_N = 2\pi\ (m_e/K_E)^{1/2}$ (Equation 5-15)

$$m_e = K_{LM} \times m = \frac{0.78 + 0.66}{2} \times \frac{w}{g} = 0.72\frac{w}{g}$$ (Table 3-12 (+))

$w = (16.5 \times 17) + 74 = 354$ lb/ft

$W = 354 \times 15.167 = 5369$ lb

$M_e = 0.72\ (5369/386.4) = 10.0$ lb-sec^2/in

$K_E = 160\ EI/L^3$ (Table 3-8 (+))

$$K_E = \frac{160 \times 30 \times 10^6 \times 796}{182^3} = 632{,}000 \text{ lb/in}$$

$T_N = 2\pi(10.0/632{,}000)^{1/2} \times 1000 = 25.0$ ms

$T/T_N = 78/25.0 = 3.12$

$$R_u = \frac{4M_p(2C+1)}{H} = \frac{4 \times 130 \times [(2 \times 3.5)+1]}{15.167} = 275 \text{ kips} \quad \text{(Table 5-13 (+))}$$

P = (2.32) (7.65/1.25) (15.167) = 215 kips

P/R_u = 215/275 = 0.78

$\mu = X_m/X_E$ = 1.80 (Figure 3-54 (+) or Figure 3-64a (+))

Check end rotation of columns.

$X_E = R_u/K$ = 275/632 = 0.435 inch

X_m = 1.80 × 0.435 = 0.78 inch

$X_m/(L/2)$ = 0.78/[(7.58) (12)] = 0.0086 = tan Θ

Θ = 0.49° < 1° O.K.

Step 8. The deflections of the local mechanisms are within the criteria. The sidesway deflection is acceptable.

Summary: The member sizes to be used in a computer analysis are as follows:

Member	Size
1	W12 × 35
2	W14 × 61
3	W14 × 74

PROBLEM 5A-7 DESIGN OF DOORS FOR PRESSURE-TIME LOADING

Problem: **Design a steel-plate blast door subjected to a pressure-time loading.**

Procedure:

Step 1. Establish the design parameters .

a. Pressure-time load

b. Design criteria: Establish support rotation, Θ_{max}, and whether seals and rebound mechanisms are required

c. Structural configuration of the door including geometry and support conditions

d. Properties of steel used:

Minimum yield strength, f_y, for door components (Table 5-1 (+))

Dynamic increase factor, *DIF* (Table 5-2 (+))

Step 2. Select the thickness of the plate.

Step 3. Calculate the elastic section modulus, S, and the plastic section modulus, Z, of the plate.

Step 4. Calculate the design plastic moment, M_p, of the plate (Equation 5-7)

Step 5. Compute the ultimate dynamic shear, V_p (Equation 5-16)

Step 6. Calculate maximum support shear, V, using a dynamic load factor of 1.25 and determine V/V_p. If V/V_p is less than 0.67, use the plastic design moment as computed in Step 4 (Section 5-31). If V/V_p is greater than 0.67, use Equation 5-23 to calculate the effective M_p.

Step 7. Calculate the ultimate unit resistance of the section (Table 3-1 (+)), using the equivalent plastic moment as obtained in Step 4 and a dynamic load factor of 1.25.

Step 8. Determine the moment of inertia of the plate section.

Step 9. Compute the equivalent elastic unit stiffness, K_E, of the plate section.

(Table 3-8 (+))

Step 10. Calculate the equivalent elastic deflection, X_E, of the plate as given by $X_E = r_u/K_E$.

Step 11. Determine the load-mass factor K_{LM} and compute the effective unit mass, m_e.

Step 12. Compute the natural period of vibration, T_N.

Step 13. Determine the door plate response using the values of P/r_u and T/T_N and the response charts of Chapter 3. Determine X_m/X_E and T_E.

Step 14. Determine the support rotation,

$$\tan \Theta = (X_m) / (L/2)$$

Compare Θ with the design criteria of Step 1b.

Step 15. Determine the strain rate, ε, using Equation 5-1. Determine the dynamic increase factor using Figure 5-2 (+) and compare with the DIF selected in Step 1d.

If the criteria of Step 1 is not satisfied, repeat Steps 2 to 15 with a new plate thickness.

Step 16. Design supporting flexural element considering composite action with the plate (if so constructed).

Step 17. Calculate elastic and plastic section moduli of the combined section.

Step 18. Follow the design procedure for a flexural element as described in Section 5A-1.

EXAMPLE 5A-7 (A) DESIGN OF A BLAST DOOR FOR PRESSURE-TIME LOADING

Required: Design a double-leaf, built-up door (6 ft by 8 ft) for the given pressure-time loading.

Step 1. Given:

a. Pressure-time loading (Figure 5A-7 (+))

b. Design criteria: This door is to protect personnel from exterior loading. Leakage into the structure is permitted but the maximum end rotation of any member is limited to 2° .

c. Structural configuration (Figure 5A-7 (+))

Note:
This type of door configuration is suitable for low-pressure range applications.

d. Steel used: A36

Figure 5A-7 Door Configuration and Loading, Example 5A-7(a)

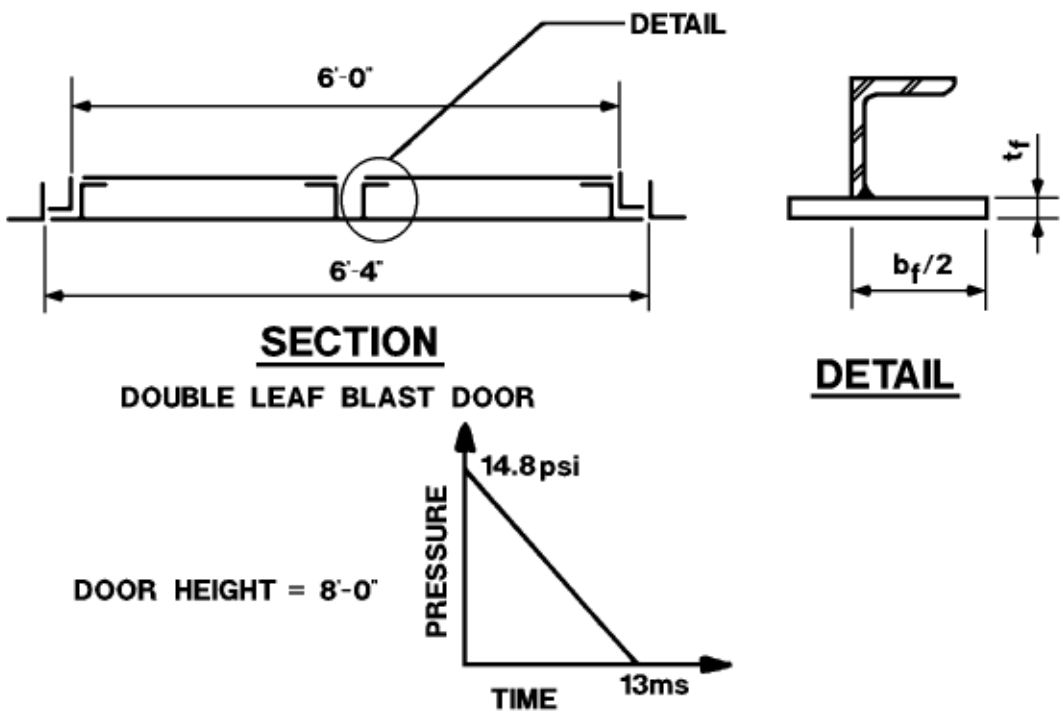

Yield strength, f_y = 36 ksi (Table 5-1 (+))

Dynamic increase factor, *DIF* = 1.29 (Table 5-2 (+))

Average yield strength increase factor, *SIF* = 1.1 (Section 5-12.1)

Hence, the dynamic design stress,

$f_{ds} = 1.1 \times 1.29 \times 36 = 51.1$ ksi (Equation 5-2)

and the dynamic yield stress in shear,

$f_{dv} = 0.55\, f_{ds} = 0.55 \times 51.1 = 28.1$ ksi (Equation 5-4)

Step 2. Assume a plate thickness of 5/8 inch.

Step 3. Determine the elastic and plastic section moduli (per unit width).

$$S = \frac{bd^2}{6} = \frac{1 \times (5/8)^2}{6} = 6.515 \times 10^{-2} \text{ in}^3\text{/in}$$

$$Z = \frac{bd^2}{4} = \frac{1 \times (5/8)^2}{4} = 9.765 \times 10^{-2} \text{ in}^3\text{/in}$$

Step 4. Calculate the design plastic moment, M_p.

$M_p = f_{ds}\,(S + Z)/2 = 51.1\,[(6.515 \times 10^{-2})$ (Equation 5-7)

$+ (9.765 \times 10^{-2})]/2 = 51.1 \times 8.14 \times 10^{-2} = 4.16$ in-k/in

Step 5. Calculate the dynamic ultimate shear capacity, V_p, for a 1-inch width.

$V_p = f_{dv} A_w = 28.1 \times 1 \times 5/8 = 17.56$ kips/in (Equation 5-16)

Step 6. Evaluate the support shear and check the plate capacity. Assume DLF = 1.25

$$V = DLF \times P \times L/2 = \frac{1.25 \times 14.8 \times 36 \times 1}{2} = 333 \text{ lb/in} = 0.333 \text{ kip/in}$$

$V/V_p = 0.333/17.56 = 0.0190 < 0.67$ (Section 5-31)

No reduction in equivalent plastic moment is necessary.

Note:

When actual DLF is determined, reconsider Step 6.

Step 7. Calculate the ultimate unit resistance, r_u, (assuming the plate to be simply-supported at both ends).

$$r_u = \frac{8M_p}{L^2} = \frac{8 \times 4.16 \times 10^3}{36^2} = 25.7 \text{ psi}$$ (Table 3-1 (+))

Step 8. Compute the moment of inertia, I, for a 1-inch width.

$$I = \frac{bd^3}{12} = \frac{1 \times (5/8)^3}{12} = 0.02035 \text{ in}^4\text{/in}$$

Step 9. Calculate the equivalent elastic stiffness, K_E.

$$K_E = \frac{384EI}{5bL^4} = \frac{384 \times 29 \times 10^6 \times 0.02035}{5 \times 1 \times 36^4} = 27.0 \text{ psi/in}$$ (Table 3-8 (+))

Step 10. Determine the equivalent elastic deflection, X_E.

$X_E = r_u/K_E =$ 25.7/27.0 = 0.95 inch

Step 11. Calculate the effective mass of element.

a. K_{LM} (average elastic and plastic)

= (0.78 + 0.66)/2 = 0.72

b. Unit mass of element, m

$$m = \frac{w}{g} = \frac{5/8 \times 1 \times 1 \times 490 \times 10^6}{1728 \times 32.2 \times 12} = 458.0 \text{ psi} - \text{ms}^2/\text{in}$$

c. Effective unit of mass of element, m_e

$m_e = K_{LM}m = 0.72 \times 458.0$

= 330 psi-ms^2/in

Step 12. Calculate the natural period of vibration, T_N.

$T_N = 2\pi\,(330/27.0)^{1/2} = 22$ ms

Step 13. Determine the door response.

Peak overpressure P = 14.8 psi

Peak resistance r_u = 25.7 psi

Duration T = 13.0 ms

Natural period of vibration T_N = 22 ms

$P/r_u = 14.8/25.7 = 0.58$

$T/T_N = 13.0/22.0 = 0.59$

From Figure 3-64a (+) of Chapter 3,

$X_m/X_E < 1$

Since the response is elastic, determine the DLF from Figure 3-49 (+) of Chapter 3.

DLF = 1.3 for $T/T_N = 0.59$

Step 14. Determine the support rotation.

$$X_m = \frac{1.3 \times 14.8 \times 0.95}{25.7} = 0.713 \text{ inch}$$

tan Θ = $X_m/(L/2)$ = 0.713/(36/2) = 0.0396

Θ = 2.27° > 2° N.G.

Step 15. Evaluate the selection of the dynamic increase factor.

Since this is an elastic response, use Figure 3-49 (b) (+) of Chapter 3 to determine t_m. For T/T_N = 0.59, t_m/T = 0.7 and t_m = 9.1 ms. The strain rate is:

$$\dot{\varepsilon} = f_{ds} / E_s t_E \qquad \text{(Equation 5-1)}$$

Since the response is elastic,

$$f_{ds} = 51.1 \times \frac{X_m}{X_E} = 51.1 \times \frac{0.713}{0.95} = 38.4 \text{ ksi}$$

and $t_E = t_m$ = 0.0091 sec. Hence,

$$\dot{\varepsilon} = \frac{38.4}{29.6 \times 10^3 \times 0.0091} = 0.142 \text{ in/in/sec}$$

Using Figure 5-2 (+), DIF = 1.31. The preliminary selection of DIF = 1.29 is acceptable.

Since the rotation criterion is not satisfied, change the thickness of the plate and repeat the procedure. Repeating these calculations, it can be shown that a 3/4-inch plate satisfies the requirements.

Step 16. Design of the supporting flexural element.

Assume an angle L4 × 3 × 1/2 and attached to the plate as shown in Figure 5A-8 (+).

Determine the effective width of plate which acts in conjunction with the angle

$$b_f/2t_f \leq 8.5 \qquad \text{(Section 5-24)}$$

where b_f /2 is the half width of the outstanding flange or overhang and t_f is the thickness of the plate.

With t_f = 3/4 inch, $b_f/2 \leq 8.5 \times 3/4$, i.e., 6.38 inches

Use overhang of 6 inches.

Hence, the effective width = 6 + 2 = 8 inches. The angle together with plate is shown in Figure 5A-8 (+).

Step 17. Calculate the elastic and plastic section moduli of the combined section.

Let $\bar{y}$ be the distance of c.g. of the combined section from the outside edge of the plate as shown in Figure 5A-8 (+), therefore

$$\bar{y} = \frac{(8 \times 3/4 \times 3/8) + (4 + 3/4 - 1.33) \times 3.25}{(8 \times 3/4) + 3.25} = 1.445 \text{ inches}$$

Let y_p be the distance to the N.A. of the combined section for full plasticity.

$$y_p = \frac{1}{8 \times 2}\left[(8 \times 3/4) + 3.25\right] = 0.578 \text{ inch}$$

$$I = \frac{8 \times (3/4)^3}{12} + 8 \times 3/4 \times (1.45 - 3/8)^2$$

$$+ 5.05 + 3.25 \times (4.75 - 1.33 - 1.45)^2 = 24.88 \text{ in}^4$$

Hence, S_{min} = 24.881/(4.75 - 1.445) = 7.54 in^3

Z = 8 (0.578)^2/2 + 8 (0.75 - 0.578)^2/2

+ 3.25 (4.75 - 1.33 - 0.578) = 10.69 in^3

Figure 5A-8 Detail of Composite Angle/Plate Supporting Element, Example 5A-7(b)

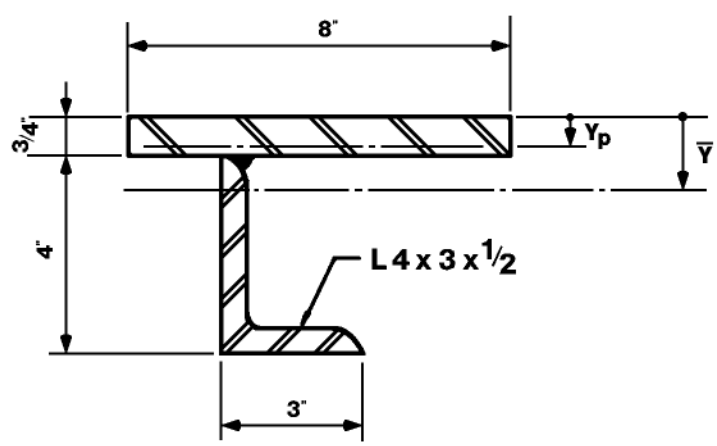

Step 18. Follow the design procedure for the composite element using Steps 4 through 13. Calculate the design plastic moment M_p of the supporting flexural element.

M_p = 51.1 (7.54 + 10.69)/2 = 465.8 in-kips (Equation 5-7)

Calculate the ultimate dynamic shear capacity, V_p.

$V_p = f_{dv}A_w$ = 28.1 (4.0 - 1/2) 1/2 = 49.2 kips (Equation 5-16)

Calculate support shear and check shear capacity.

Calculate the ultimate unit resistance, r_u.

Assuming the angle to be simply supported at both ends:

$r_u = 8M_p/L^2 = (8 \times 465.8 \times 1000)/(96)^2$ = 405 lb/in (Table 3-1 (+))

Calculate the unit elastic stiffness, K_E.

$$K_E = \frac{384EI}{5L^4} = \frac{384 \times 29 \times 10^6 \times 24.881}{5 \times 96^4} = 652.5 \text{ lb/in}^2$$ (Table 3-8 (+))

Determine the equivalent elastic deflection, X_E.

$X_E = r_u/K_E$ = 405/652.5 = 0.620 inch

Calculate the effective mass of the element using the full width of plate over the 18 inch wide blast-loaded area.

K_{LM} = 0.72

$$w = \frac{11.1}{12} + \frac{3}{4} \times 18 \times \frac{490}{1728} = (0.925 + 3.825) = 4.750 \text{ lb/in}$$

Effective unit mass of element,

$$m_e = 0.72 \times \frac{4.75 \times 10^6}{32.2 \times 12} = 0.89 \times 10^4 \text{ lb} - \text{ms}^2/\text{in}^2$$

Calculate the natural period of vibration, T_N.

$T_N = 2\pi[(89 \times 10^2)/652.5]^{1/2}$ = 23.2 ms

Determine the response parameters. (Figure 3-54 (+) or Figure 3-64a (+))

Peak overpressure $P = 14.8 \times 36/2$ = 266.5 lb/in

Peak resistance r_u = 405 lb/in

Duration T = 13.0 ms

Natural period of vibration, T_N = 23.2 ms

P/r_u = 266.5/405 = 0.658

T/T_N = 13/23.2 = 0.56

From Figure 3-64a (+),

$\mu = X_m/X_E < 1$

From Figure 3-49 (+) for $T/T_N = 0.56$,

DLF = 1.28

Hence, $X_m = \dfrac{1.28 \times 14.8 \times 36/2}{652.5} = 0.522$ in

tan $\Theta = X_m/(L/2) = 0.522/48 = 0.0109$

$\Theta = 0.69° < 2°$ O.K.

Calculate support shear (V) and check shear capacity.

L = 8'-0" = 96 inches

V= (P x DLF $\times$ 36/2 $\times$ L)/2

V= (14.8 x 1.28 $\times$ 36/2 $\times$ 96)/2 = 16367 lb = 16.37 kips < V_p O.K.

(Section 5-2

Check stresses at the connecting point.

$\sigma = My/I = 392 \times 10^3 \times (1.445 - 0.75)/24.881$

$$= 10950\,\text{psi where} \left(M = \frac{X_m}{X_E} \times M_p = \frac{0.522}{0.62} \times 466 = 392 \right)$$

$$\tau = \frac{VQ}{Ib} = \frac{16.37 \times 10^3 \times 8 \times 3/4 \times (1.445 - 0.75/2)}{24.881 \times 1/2} = 8{,}500\,\text{psi}$$

Effective stress at the section of connecting point

$(\sigma^2 + \tau^2)^{1/2} = 10^3 \times (10.5.^2 + 8.5.^2)^{1/2} = 13{,}860$ psi < 39.600 psi O.K.

EXAMPLE 5A-7 (B)DESIGN OF A PLATE BLAST DOOR FOR PRESSURE-TIME LOADING

Required: Design a single-leaf door (4 ft by 7 ft) for the given pressure-time loading.

Step 1. Given:

a. Pressure-time loading [Figure 5A-9 (+)]

b. Design criteria: Door shall be designed to contain blast pressures from an internal explosion. Gasket and reversal mechanisms shall be provided. Support rotation shall be limited to 3°

Figure 5A-9 Door Configuration and Loading, Example 5A-7(b)

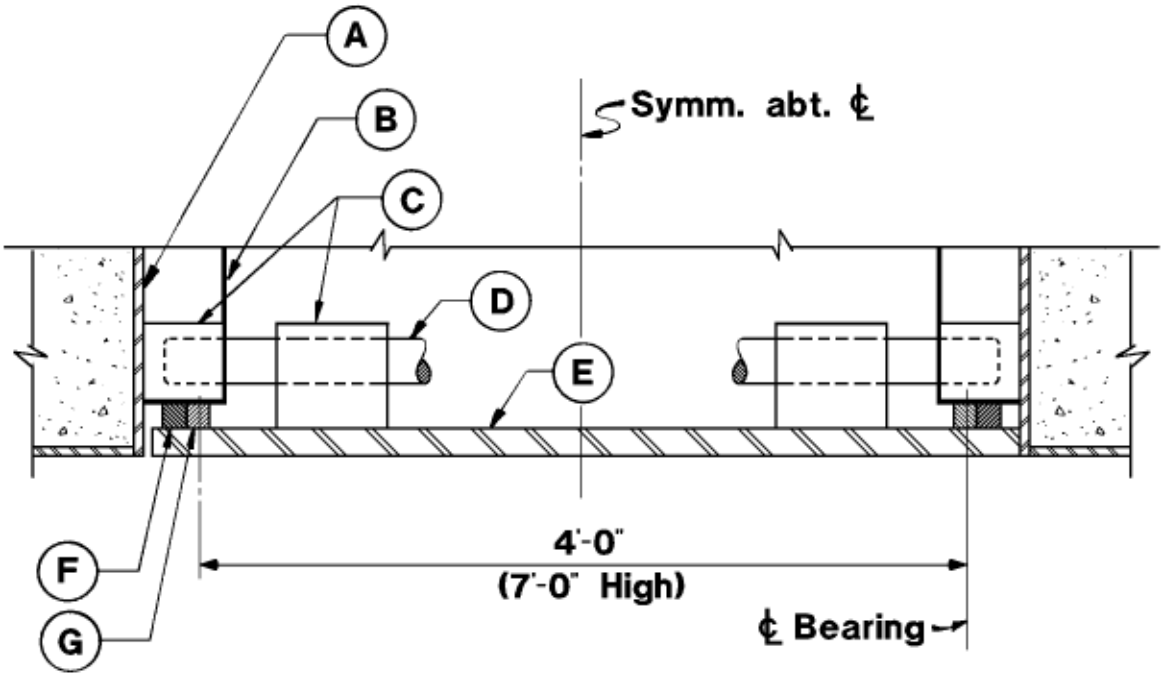

PLAN / SECTION

Legend:

A - Steel frame embedded in concrete
B - Steel sub-frame
C - Reversal bolt housing
D - Reversal bolt
E - Blast door plate
F - Continuous gasket
G - Continuous bearing block

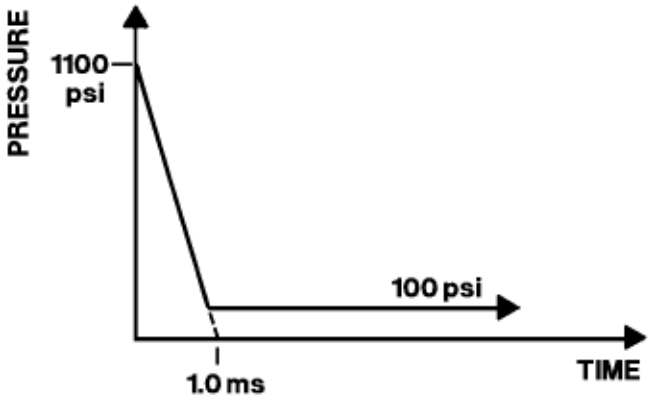

c. Structural configuration (see Figure 5A-9 (+))

Note:
This type of door is suitable for high pressure range applications.

d. Steel used: ASTM A588

Yield strength, f_y = 50 ksi (Table 5-1 (+))

Dynamic increase factor, *DIF* = 1.24 (preliminary, Table 5-2 (+))

Average strength increase factor, *SIF* = 1.1 (Section 5-12.1)

Hence, the dynamic design stress,

$f_{ds} = 1.1 \times 1.24 \times 50 = 68.2$ ksi (Equation 5-2)

Note:
It is assumed, for the limited design rotation of 3° , that $\mu < 10$, and, therefore, that Equation 5-3 does not govern.

The dynamic design stress in shear

$f_{dv} = 0.55\, f_{ds} = 37.5$ ksi (Equation 5-4)

Step 2. Assume a plate thickness of 2 inches

Step 3. Determine the elastic and plastic section moduli (per unit width)

$$S = \frac{bd^2}{6} = \frac{1 \times 2^2}{6} = 0.667 \text{ in}^3/\text{in}$$

$$Z = \frac{bd^2}{4} = \frac{1 \times 2^2}{4} = 1.0 \text{ in}^3/\text{in}$$

Step 4. Calculate the design plastic moment, M_p

$M_p = f_{ds}\,(S + Z)/2 = 68.2\,(0.667 + 1.0)/2 = 56.8$ in-k/in (Equation 5-7)

Step 5. Calculate the dynamic ultimate shear capacity, V_p, for a 1-inch width.

$V_p = f_{dv}A_w = 37.5 \times 2 = 75.0$ kips/in (Equation 5-16)

Step 6. Evaluate the support shear and check the plate shear capacity.

Assume DLF = 1.0 (Table 5-4 (+))

For simplicity, assume the plate is a one-way member, hence:

$V = \text{DLF} \times P \times L/2 = 1.0 \times 1100 \times 48/2 = 26{,}400$ lb/in

$= 26.4$ kips/in

V/V_p = 26.4/75. = 0.352 < 0.67 (Section 5-31)

No reduction in equivalent plastic moment is necessary.

Step 7. Calculate the ultimate unit resistance, r_u.

For a plate, simply-supported on four sides (direct load)

$r_u = 5M_p/X^2$ (Table 3-2 (+))

where $M_{HP} = M_p$ and $M_{HN} = 0$ and

$$\frac{X}{L} = 0.35 \text{ for } \frac{L}{H} = 1.75$$ (Figure 3-17 (+))

thus, $X = 0.35 \times 12 \times 7 = 29.4$ in

$r_u = 5 \times 56.8/(29.4)^2 = 329$ psi

Step 8. Compute the moment of inertia, I, for a 1-inch width

$$I = \frac{bd^3}{12} = \frac{1 \times 2^3}{12} = 0.667 \text{in}^4/\text{in}$$

Step 9. Calculate the equivalent elastic stiffness, K_E

$K_E = r/x = D/\gamma H^4$ (Figure 3-36 (+))

where

$\gamma = 0.0083$ (for $H/L = 0.57$)

$D = EI/[b\ (1 - \nu^2)]$ (Equation 3-33)

$D = 29.6 \times 10^6 \times 0.667/[1\ (1 - 0.3^2)] = 2.17 \times 10^7$

$K_E = 2.17 \times 10^7/0.0083 \times 48^4 = 492$ psi/in

Step 10. Determine the equivalent elastic deflection, X_E.

$X_E = r_u/K_E = 329/492 = 0.669$ in

Step 11. Calculate the effective mass of the element

a. K_{LM} (average elastic and plastic)

= (0.78 + 0.66)/2 = 0.72

b. Unit mass of element

$$m = \frac{w}{g} = \frac{2 \times 1 \times 1 \times 490 \times 10^6}{1{,}728 \times 32.2 \times 12} = 1{,}468 \frac{\text{psi} - \text{ms}^2}{\text{in}}$$

c. Effective unit mass of element, m_e

$$m_e = K_{LM} \times m = 0.72 \times 1{,}468 = 1{,}057 \frac{\text{psi} - \text{ms}^2}{\text{in}}$$

Step 12. Calculate the natural period of vibration, T_N

$T_N = 2\pi\ (1{,}057/492)^{1/2} = 9.2$ ms

Step 13. Determine the door plate response for:

$P/r_u = 1100/329 = 3.34$

$T/T_N = 1.0/9.2 = 0.109$

$C_1 = 100/1100 = 0.091$ (Figure 3-62 (+), Region C)

$C_2 > 1000$

Using Figure 3-253 (+/+/+),

$X_m/X_E = 1.5$

$X_m = 1.5 \times 0.669 = 1.00$ in

Step 14. Determine the support rotation.

$\Theta = \tan^{-1}(1/24) = 2.39° < 3°$

Step 15. Evaluate the selection of the dynamic increase factor.

$\dot{\varepsilon} = f_{ds} / E_s t_E$ (Equation 5-1)

$t_E/T = 1.8$, $t_E = 1.8$ ms (Figure 3-253 (+/+/+))

$\dot{\varepsilon} = 68.2/(29.6 \times 10^3 \times 0.0018) = 1.28$ in/in/sec

DIF = 1.3 (Figure 5-2 (+), average of A36 and A514)

Initial selection of DIF = 1.24 is adequate.

Since the support rotation criteria has been satisfied and the preliminary selection of the DIF is acceptable, a 2 inch thick plate is used in design.

Steps 15 through 18 These steps are bypassed since the door plate has no stiffening elements.

PROBLEM 5A-8 DESIGN OF DOUBLY SYMMETRIC BEAMS SUBJECTED TO INCLINED PRESSURE-TIME LOADING

Problem: **Design a purlin or girt as a flexural member which is subjected to a transverse pressure-time load acting in a plane other than a principal plane.**

Procedure:

Step 1. Establish the design parameters.

a. Pressure-time load

b. Angle of inclination of the load with respect to the vertical axis of the section

c. Design criteria: Maximum support rotation limited to 2°.

d. Member spacing, *b*

e. Type and properties of steel used:

Minimum yield strength for the section (Table 5-1 (+))

Dynamic increase factor, *DIF* (Table 5-2 (+))

Step 2. Preliminary sizing of the beam.

a. Determine the equivalent static load, *w*, using a preliminary dynamic load factor equal to 1.0.

$w = 1.0 \times p \times b$

b. Using the appropriate resistance formula from Table 3-1 (+) and the equivalent static load derived in Step 2a, determine the required M_p.

c. Determine the required section properties using Equation 5-7. Select a larger section since the member is subjected to unsymmetrical bending.

Note that for a load inclination of 10°, it is necessary to increase the required average section modulus, (1/2) (*S* + *Z*), by 40 percent.

Step 3. Check local buckling of the member. (Section 5-24).

Step 4. Calculate the inclination of the neutral axis. (Equation 5-24).

Step 5. Calculate the elastic and plastic section moduli of the section.

(Equation 5-25).

Step 6. Compute the design plastic moment, M_p, (Equation 5-6).

Step 7. Calculate ultimate unit resistance, r_u, of the member.

Step 8. Calculate elastic deflection, δ. (Section 5-32.3).

Step 9. Determine the equivalent elastic unit stiffness, K_E, of the beam section using δ from Step 8.

Step 10. Compute the equivalent elastic deflection, X_E, of the member as given by $X_E = r_u/K_E$.

Step 11. Determine the load-mass factor, K_{LM}, and obtain the effective unit mass, m_e, of the element.

Step 12. Evaluate the natural period of vibration, T_N.

Step 13. Determine the dynamic response of the beam. Evaluate P/r_u and T/T_N, using the response charts of Chapter 3 to obtain X_m/X_E and Θ. Compare with criteria.

Step 14. Determine the ultimate dynamic shear capacity, V_p (Equation 5-16) and maximum support shear, V, using Table 3-9 (+) of Chapter 3 and check adequacy.

EXAMPLE 5A-8 DESIGN AN I-SHAPED BEAM FOR UNSYMMETRICAL BENDING DUE TO INCLINED PRESSURE-TIME LOADING

Required: **Design a simply-supported I-shaped beam subjected to a pressure-time loading acting at an angle of 10° with respect to the principal vertical plane of the beam. This beam is part of a structure designed to protect personnel.**

Step 1. Given:

a. Pressure-time loading (Figure 5A-10 (+))

b. Design criteria: The structure is to be designed for more than one "shot." A maximum end rotation = 1°, is therefore assigned

c. Structural configuration (Figure 5A-10 (+))

d. Steel used: A36

Yield strength, f_y = 36 ksi (Table 5-1 (+))

Dynamic increase factor, *DIF* = 1.29 (Table 5-2 (+))

Average yield strength increase factor, *SIF* = 1.1 (Section 5-12.1)

Dynamic design strength,

$$f_{ds} = 1.1 \times 1.29 \times 36 = 51.1 \text{ ksi} \qquad \text{(Equation 5-2)}$$

Dynamic yielding stress in shear,

$$f_{dv} = 0.55\, f_{ds} = 0.55 \times 51.1 = 28.1 \text{ ksi} \qquad \text{(Equation 5-4)}$$

Modulus of elasticity, E = 29,000,000 psi

Step 2. Preliminary sizing of the member.

a. Determine equivalent static load.

Select DLF = 1.2 (Section 5-22.3)

$w = 1.25 \times 4.5 \times 4.5 \times 144/1{,}000 = 3.65$ k/ft

Figure 5A-10 Beam Configuration and Loading, Example 5A-8(a)

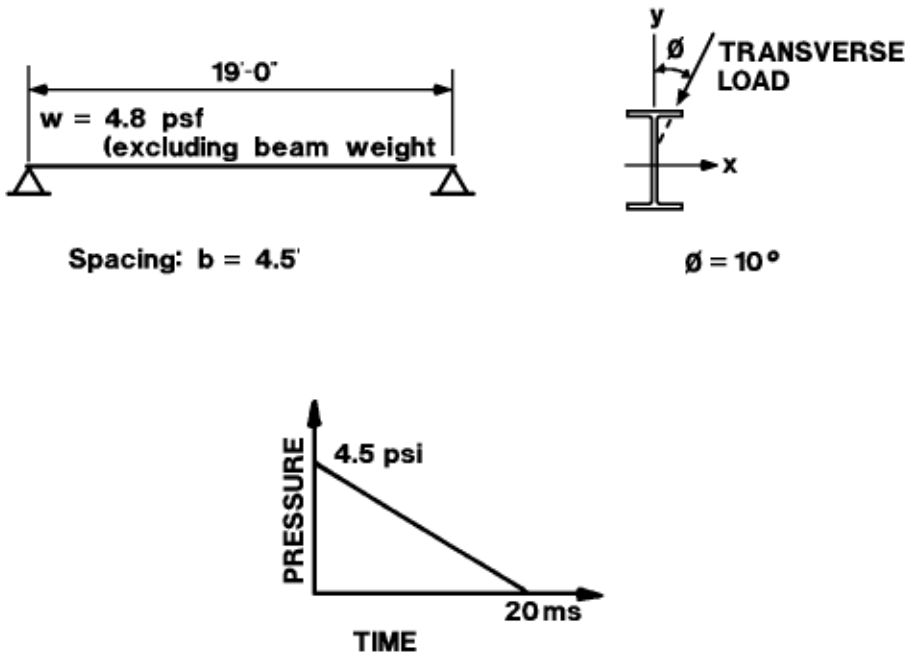

b. Determine minimum required M_p

$M_p = (wL^2)/8 = (3.65 \times 19^2)/8 = 165$ k-ft (Table 3-1 (+))

c. Selection of a member.

For a load acting in the plane of the web,

$(S + Z) = 2M_p / f_{ds} = (2 \times 165 \times 12)/51.1$ (Equation 5-7)

$(S + Z) = 77.5$ in^3

$(S + Z)$ required $1.4 \times 77.5 = 109$ in^3

Try W14 × 38, $S_x = 54.6$ in^3, $Z_x = 61.5$ in^3

$(S + Z) = 116.1$ in^3, $I_x = 385$ in^4

$I_y = 26.7$ in^4

Step 3. Check against local buckling.

For W14 × 38,

$d/t_w = 45.5 < (412 / (36)^{1/2})\ (1 - 1.4 \times P/P_y) = 68.66$ O.K. (Equation 5-17)

$b_f/2t_f = 6.6 < 8.5$ O.K. (Section 5-24)

Step 4. Inclination of elastic and plastic neutral axes with respect to the x-axis.

$\tan \alpha = (I_x/I_y) \tan \phi = (385/26.7) \tan 10° = 2.546$ (Equation 5-24)

$\alpha = 68.5°$

Calculate the equivalent elastic section modulus.

$S = (S_x S_y)/(S_y \cos \phi + S_x \sin \phi)$

$S_x = 54.6 \text{ in}^3$, $S_y = 7.88 \text{ in}^3$, $\phi = 10°$

$\sin 10° = 0.174$, $\cos 10° = 0.985$

$S = (54.6)(7.88)/(7.88 \times 0.985 + 54.7 \times 0.174) = 24.9 \text{ in}^3$

Step 5. Calculate the plastic section modulus, Z.

$Z = A_c m_1 + A_t m_2$ (Equation 5-6)

$A_c = A_t = A/2 = 11.2/2 = 5.6 \text{ in}^2$

Let $\bar{y}$ be the distance of the c.g. of the area of cross section in compression from origin as shown in Figure 5A-11 (+).

$$\bar{y} = \frac{1}{5.6}\left[6.770 \times 0.515 \times \left(\frac{14.10}{2} - \frac{0.515}{2}\right) + \frac{1}{2}(14.10 - 2 \times 0.515) \times 0.310 \times \frac{1}{2}\left(\frac{14.10}{2} - 0.515\right)\right] = 5.42 \text{ inches}$$

$$m_1 = m_2 = \bar{y} \sin \alpha = 5.42 \sin(68°30') = 5.05 \text{ inches}$$

$$Z = 2A_c m_1 = 11.2 \times 5.05 = 56.5 \text{in}^3$$

Figure 5A-11 Loading on Beam Section, Example 5A-8(b)

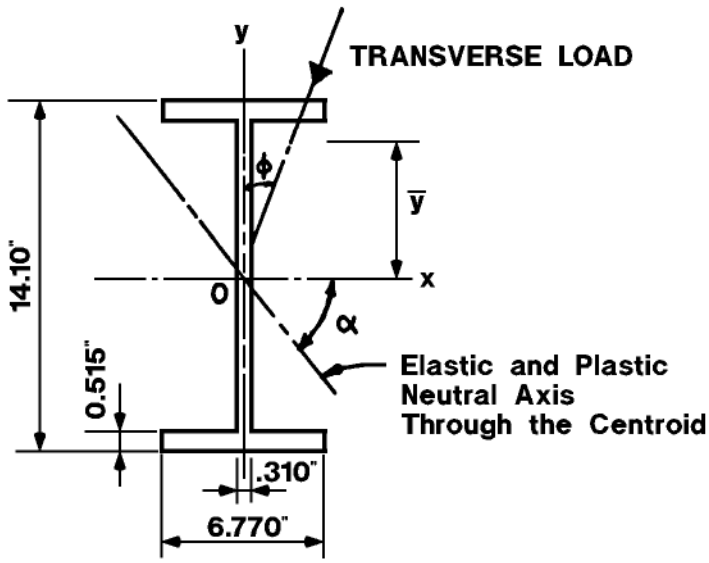

Step 6. Determine design plastic moment, M_p.

$M_p = f_{ds}(S + Z)/2 = 51.1(24.9 + 56.5)/2$ (Equation 5-7)

$= 51.1 \times 40.7 = 2{,}080$ in-kips

Step 7. Calculate ultimate unit resistance, r_u.

$r_u = 8M_p/L^2 = (8)\ (2{,}080)\ (1{,}000)/(19 \times 12)^2 = 320$ lb/in (Table 3-1 (+))

Step 8. Compute elastic deflection, δ.

$\delta = [(\delta_x^2 + \delta_y^2)]^{1/2}$ (Section 5-32.3)

$$\delta_y = \frac{5w\cos\phi L^4}{384EI_x}$$

$$\delta_x = \frac{5w\sin\phi L^4}{384EI_y}$$

$$w = \text{equivalent static load} + \text{dead load}$$

$$= 2.92 + \frac{(4.8 \times 4.5) + 38}{1{,}000}\text{kips/ft} = 2.94 \text{ kips/ft}$$

$$\delta = \left[\frac{(5w\sin\phi L^4)^2}{384EI_y} + \frac{(5w\cos\phi L^4)^2}{384EI_x}\right]^{1/2}$$

$$= \frac{5wL^4}{38{,}400E} \times \left[0.652^2 + 0.256^2\right]^{1/2} = 2.08 \text{ inches}$$

Step 9. Calculate the equivalent elastic unit stiffness, K_E.

$$K_E = \frac{w}{\delta} = \frac{2.94 \times 1{,}000 \times 1}{12 \times 2.085} = 117.8 \text{ lb/in}^2$$ (Get w from Step 8)

Step 10. Determine the equivalent elastic deflection, X_E.

$X_E = r_u/K_E = 320/117.8 = 2.72$ inches

Step 11. Calculate the effective mass of the element, m_e.

a. Load-mass factor, K_{LM} (Table 3-12 (+))

K_{LM} (average elastic and plastic)

$= (0.78 + 0.66)/2 = 0.72$

b. Unit mass of element, m

$$m = \frac{w}{g} = \frac{[(4.5 \times 4.8) + 38] \times 10^6}{32.2 \times 12 \times 12} = 1.286 \times 10^4 \text{ lb} - \text{ms}^2/\text{in}^2$$

c. Effective unit mass of element, m_e

$m_e = K_{LM}m = 0.72 \times 1.286 \times 10^4 = 0.93 \times 10^4$ lb-ms^2/in^2

Step 12. Calculate the natural period of vibration, T_N.

$T_N = 2\pi\,[(93 \times 10^2)/117.8]^{1/2} = 55.8$ ms (Section 5-22.2)

Step 13. Determine the beam response.

Peak overpressure $P = 4.5 \times 4.5 \times 12 = 243$ lb/in

Peak resistance $r_u = 320$ lb/in

Duration $T = 20$ ms

Natural period of vibration $T_N = 55.8$ ms

$P/r_u = 243/320 = 0.76$

$T/T_N = 20/55.8 = 0.358$

From Figure 3-64a (+)

$X_m/X_E < 1$

From Figure 3-49 (+), for $T/T_N = 0.358$,

DLF = 0.97

Hence, $X_m = 0.97 \times 4.5 \times 4.5 \times 12/117.8 = 2.0$ in

Find end rotation, Θ.

$\tan \Theta = X_m/(L/2) = 2.0/[(19 \times 12)/2] = 0.0175$

$\Theta = 1.0°$ O.K.

Step 14. Calculate the dynamic ultimate shear capacity, V_p, and check for adequacy.

$V_p = f_{dv}A_w = 28.1\ (14.10 - 2 \times 0.515)\ (0.310) = 113.9$ kips (Equation 5-16)

$V = \text{DLF} \times P \times b \times L/2$

$= 0.97 \times 4.5 \times 4.5 \times 19 \times 144/(2 \times 1{,}000)$

$= 26.9$ kips < 89.2 kips $< V_p$ O.K. (Table 3-9 (+))

APPENDIX 5B LIST OF SYMBOLS

SIF	yield stress increase factor
A	Area of cross section (in^2)
A_b	Area of bracing member (in^2)
A_c	Area of cross section in compression (in^2)
A_t	Area of cross section in tension (in^2)
A_w	Web area (in^2)
b	Width of tributary loaded area (ft)
b_f	Flange width (in)
b_h	Tributary width for horizontal loading (ft)
b_v	Tributary width for vertical loading (ft)
DIF	Dynamic increase factor
c	Distance from neutral axis to extreme fiber of cross-section in flexure (in)
C, C_1	Coefficients indicating relative column to girder moment capacity (Section 5-42.1)
C_b	Bending coefficient defined in Section 1.5.1.4.5 of the AISC Specification
C_c	Column slenderness ratio indicating the transition from elastic to inelastic buckling
C_{mx}, C_{my}	Coefficients applied to the bending terms in interaction formula (AISC Specification Section 1.6.1)
C_2	Coefficient in approximate expression for sidesway stiffness factor (Table 5-14 (+))
D	Coefficient indicating relative girder to column stiffness (Table 5-14 (+))
DLF	Dynamic load factor
d	(1) Web depth (in)
	(2) Diameter of cylindrical portion of fragment (in)
E	Young's modulus of elasticity (psi)
f	(1) Maximum bending stress (psi)
	(2) Shape factor, S/Z

f_a	Axial stress permitted in the absence of bending moment from Section 5-37.3 (psi)
f_b	Bending stress permitted in the absence of axial force (psi)
f_{cr}	Web buckling stress (psi)
f_d	Maximum dynamic design stress for connections (psi)
f_{ds}	Dynamic design stress for bending, tension and compression (psi)
f_{dv}	Dynamic yielding shear stress (psi)
f_{dv}	Dynamic ultimate stress (psi)
f_{dy}	Dynamic yield stress (psi)
F'_{ex}, F'_{ey}	Euler buckling stresses divided by safety factor (psi)
F_H	Horizontal component of force in bracing member (lb)
F_s	Allowable static design stress for connections (psi)
f_u	Ultimate tensile stress (psi)
f_y	Minimum static yield stress (psi)
g	Acceleration due to gravity (386 in/sec^2)
H	Story height (ft)
h	Web depth for cold-formed, light gauge steel panel sections (in)
I	Moment of inertia (in^4)
I_{ca}	Average column moment of inertia for single-story multi-bay frame (in^4)
I_{20}	Effective moment of inertia for cold-formed section at a service stress of 20 ksi (in^4 per foot width)
I_x	Moment of inertia about the x-axis (in^4)
I_y	Moment of inertia about the y-axis (in^4)
K	(1) Effective length factor for a compression member
	(2) Stiffness factor for rigid single-story, multi-bay frame from Table 5-14 (+)
K_b	Horizontal stiffness of diagonal bracing (lb/ft)
K_E	Equivalent elastic stiffness (lb/in or psi/in)
K_L	Load factor

K_{LM}	Load-mass factor
K_M	Mass factor
L	(1) Span length (ft or in)
	(2) Frame bay width (ft)
l	Distance between cross section braced against twist or lateral displacement of compression flange or distance between points of lateral support for beams or columns
l/r	Slenderness ratio
l_b	Actual unbraced length in the plane of bending (in)
l_{cr}	Critical unbraced length (in)
M	Total effective mass (lb-ms^2/in)
M_{mx}, M_{my}	Moments about the x- and y-axis that can be resisted by member in the absence of axial load
M_p	Design plastic moment capacity
M_1, M_2	Design plastic moment capacities (Figures 5-6 (+) and 5-10 (+))
M_{px}, M_{py}	Plastic bending moment capacities about the x- and y-axes
M_{pu}	Ultimate dynamic moment capacity
M_{up}	Ultimate positive moment capacity for unit width of panel
M_{un}	Ultimate negative moment capacity for unit width of panel
M_y	Moment corresponding to first yield
m	(1) Unit mass of panel (psi-ms^2/in)
	(2) Number of braced bays in multi-bay frame
m_e	Effective unit mass (psi-ms^2/in)
m_1	Distance from plastic neutral axis to the centroid of the area in compression in a fully plastic section (in)
m_2	Distance from plastic neutral axis to the centroid of the area in tension in a fully plastic section (in)
N	Bearing length at support for cold-formed steel panel (in)
n	Number of bays in multi-bay frame

P	(1) Applied compressive load (lb)
	(2) Peak pressure of equivalent triangular loading function, (psi) [when used with r_u], or peak total blast load (lb) [when used with R_u].
P_{ex}, P_{ey}	Euler buckling loads about the *x*- and *y*-axes
P_p	Ultimate capacity for dynamic axial load, Af_{dy} (lb)
P_u	Ultimate axial compressive load (lb)
P_y	Ultimate capacity for static axial load Af_y (lb)
P_h	Reflected blast pressure on front wall (psi)
P_v	Blast overpressure on roof (psi)
Q_u	Ultimate support capacity (lb)
q_h	Peak horizontal load on rigid frame (lb/ft)
q_v	Peak vertical load on rigid frame (lb/ft)
R	Equivalent total horizontal static load on frame (lb)
R_u	Ultimate total flexural resistance (lb)
r_b	Radius of gyration of bracing member (in)
r_T	Radius of gyration, Equation 5-22 (in)
r_u	Ultimate unit flexural resistance (lb/in or psi)
r_x, r_y	Radii of gyration about the *x*- and *y*-axes (in)
$\bar{r}$	Required resistance for elastic behavior in rebound (psi)
S	Elastic section modulus (in^3)
S_x, S_y	Elastic section modulus about the *x*- and *y*-axes (in^3)
S^+	Effective section modulus of cold-formed section for positive moments (in^3)
S^-	Effective section modulus of cold-formed section for negative moments (in^3)
T	Load duration (sec)
T_N	Natural period of vibration (sec)
t	(1) Thickness of plate element (in)
	(2) Thickness of panel section (in)

t_E	Time to yield (sec)	
t_f	Flange thickness (in)	
t_m	Time to maximum response (sec)	
t_w	Web thickness (in)	
V	Support shear (lb)	
V	Ultimate shear capacity (lb)	
V_r	Residual velocity of fragment (fps)	
V_s	Striking velocity of fragments (fps)	
V_x	Critical perforation velocity of fragment (fps)	
W	Total weight (lb)	
W_c	Total concentrated load (lb)	
W_E	External work (lb-in)	
W_f	Fragment weight (oz)	
W_I	Internal work (lb-in)	
w	(1)	Flat width of plate element (in)
	(2)	Load per unit area (psi)
	(3)	Load per unit length (lb/ft)
X_o	Deflection at design ductility ratio (in) (Figure 5-12 (+))	
X_E	Equivalent elastic deflection (in)	
X_m	Maximum deflection (in)	
x	Depth of penetration of steel fragments (in)	
Z	Plastic section modulus (in^3)	
Z_x, Z_y	Plastic section moduli about the x- and y-axes (in^3)	
α	(1)	Angle between the horizontal principal plane of the cross section and the neutral axis (deg)
	(2)	Ratio of horizontal to vertical loading on a frame

$ß$	(1)	Base fixity factor (Table 5-14 (+))
	(2)	Support condition coefficient (Section 5-34.3)
	(3)	Critical length for bracing correction factor (Section 5-26.3)
γ	Angle between bracing member and a horizontal plane (deg)	
δ	(1)	Total transverse elastic deflection (in)
	(2)	Lateral (sidesway) deflection (in)
ε	Strain (in/in)	
ε	Average strain rate (in/in/sec)	
Θ	(1)	Member end rotation (deg)
	(2)	Plastic hinge rotation (deg)
Θ_{max}	Maximum permitted member end rotation	
μ	Ductility ratio	
μ_{max}	Maximum permitted ductility ratio	
ϕ	Angle between the plane of the load and the vertical principal plane of the cross section (deg)	

APPENDIX 5C BIBLIOGRAPHY

1. Healey, J., et al., Design of Steel Structures to Resist the Effects of HE Explosions, by Ammann & Whitney, Consulting Engineers, New York, New York, Technical Report 4837, Picatinny Arsenal, Dover, New Jersey, August 1975.

2. Keenan, W., Tancreto, J., Meyers, G., Johnson, F., Hopkins, J., Nickerson, H. and Armstrong, W., NCEL Products Supporting DOD Revision of NAVFAC P-397, Program No. Y0995-01-003-201, Technical Memorandum 2591TM, sponsored by Naval Facilities Engineering Command, Alexandria, Virginia and Naval Civil Engineering Laboratory, Port Hueneme, California, March 1983.

3. Stea, W., Tseng, G. and Kossover, D., Nonlinear Analysis of Frame Structures Subjected to Blast Overpressures, by Ammann & Whitney, Consulting Engineers, New York, New York, Contractor Report ARLCD-CR-77008, U.S. Army Research and Development Command, Large Caliber Weapons Systems Laboratory, Dover, New Jersey, May 1977.

4. Stea, W., and Sock, F., Blast-resistant Capacities of Cold-formed Steel Panels, by Ammann & Whitney, Consulting Engineers, New York, New York, Contractor Report ARLCD-CR-81001, U.S. Army Research and Development Command, Large Caliber Weapon Systems Laboratory, Dover, New Jersey, May 1981.

5. Stea, W., Dobbs, N. and Weissman, S., Blast Capacity Evaluation of Pre-engineered Building, by Ammann & Whitney, Consulting Engineers, New York, New York, Contractor Report ARLCD-CR-79004, U.S. Army Research and Development Command, Large Caliber Weapons Laboratory, Dover, New Jersey, March 1979.

6. Healey, J., Weissman, S., Werner, H. and Dobbs, N., Primary Fragment Characteristics and Impact Effects on Protective Barriers, by Ammann & Whitney, Consulting Engineers, New York, New York, Technical Report 4903, Picatinny Arsenal, Dover, New Jersey, December 1975.

7. Manual of Steel Construction, Eighth Edition, American Institute of Steel Construction, New York, New York, 1980.

8. Specification for the Design, Fabrication and Erection of Structural Steel for Buildings and Commentary thereon, American Institute of Steel Construction, New York, New York, 1978.

9. Specification for the Design of Cold-Formed Steel Structural Members and Commentary thereon, American Iron and Steel Institute, New York, New York 1968.

10. Design of Structures to Resist the Effects of Atomic Weapons, Department of the Army Technical Manual TM 5-856-2, 3 and 4, Washington, D.C., August 1965.

11. Bleich, F., Buckling Strength of Metal Structures, McGraw-Hill, New York, 1952.

12. Newmark, N.M, and Haltiwanger, J.D., Principles and Practices for Design of Hardened Structures, Air Force Design Manual, Technical Documentary Report Number AFSWC, TDR-62-138, Air Force Special Weapons Center, Kirtland Air Force Base, New Mexico, December 1962.

13. Seely, F.B., and Smith, J.O., Advanced Mechanics of Materials, Second Edition, J. Wiley & Sons, New York, New York, 1961.

14. Bresler, B., et al., Design of Steel Structures, J. Wiley & Sons, New York, New York, 1968.

15. Johnston, B.G., ed., Guide to Design Criteria for Metal Compression Members, Second Edition, J. Wiley & Sons, New York, New York 1966.

16. McGuire, W., Steel Structures, Prentice Hall, Englewood, New Jersey, 1968.

17. Tall, L., et al., Structural Steel Design, Ronald Press, New York, New York, 1964.

18. Beedle, L.S., Plastic Design of Steel Frames, J. Wiley & Sons, New York, New York, 1958.

19. Hodge, P.G., Plastic Analysis of Structures, McGraw-Hill, New York, 1959.

20. Massonet, C.E., and Save, M.A., Plastic Analysis and Design, Blaisdell, New York, New York, 1965.

21. Plastic Design in Steel, A Guide and Commentary, Second Edition, Joint Committee of the Welding Research Council and the American Society of Civil Engineers, ASCE, 1971.