APPENDIX 4: REINFORCED CONCRETE DESIGN

APPENDIX 4A ILLUSTRATIVE EXAMPLES

PROBLEM 4A-1. ELEMENTS DESIGNED FOR THE PRESSURE-TIME RELATIONSHIP

Problem: Design an element which responds to the pressure-time relationship.

Note: Steps 5, 8, 10 through 18, 22 and 23 are specific for two-way elements, however, references are given defining similar procedures for one-way elements.

Procedure:

Step 1. Establish design parameters:

a. Blast loads including pressure-time relationship (Chapter 2).

b. Deflection criteria.

c. Structural configuration including geometry and support conditions.

d. Type of section available to resist blast, Type I, II or III depending upon the occurrence of spalling and/or crushing of the concrete cover.

Step 2. Select cross section of element including thickness and concrete cover over reinforcement. Also determine static stresses of concrete and reinforcing steel (Section 4-12).

Step 3. Determine dynamic increase factors for both concrete and reinforcement from Table 4-1 (+). Using the above *DIF* and the static stresses of Step 2, calculate the dynamic strength of materials.

Step 4. Determine the dynamic design stresses using Table 4-2 (+) and the results from Step 3.

Step 5. Assume vertical and horizontal reinforcement bars to yield the optimum steel distribution. The steel distribution is optimum when the resulting yield lines make an angle of 45 degrees with supports.

Step 6. Calculate d_e (d or d_c, depending upon type of cross section available to resist blast) for both the positive and negative moments in both vertical and horizontal directions. Determine reinforcing ratios. Also check for minimum steel ratios from Table 4-3 (+).

Step 7. Using the area of reinforcement, the value of d_e from Step 6, and the dynamic design stresses of Step 4, calculate the moment capacity (Section 4-17) of both the positive and negative reinforcement.

Note: Steps 8, 10 through 18 are required to determine the actual and equivalent resistance-deflection curves for two-way elements. To obtain these curves for one-way elements, see Problem 4A-6.

Step 8. Using the equations of Table 3-2 (+) or Table 3-3 (+) and the moment capacities of Step 7. calculate the ultimate resistance in the plastic range.

Step 9. Using Equation 4-4, the static concrete stress of Step 2, and unit weight for concrete equal to 150 psf, calculate the modulus of elasticity for concrete. With the above modulus for concrete and that for steel (Equation 4-5) and Equation 4-6, calculate the modular ratio.

Step 10. With the use of Equation 4-9a and the assumed concrete thickness of Step 2, calculate the gross moment of inertia of the concrete. Using the value of d_e for the negative and positive reinforcement of Step 6, calculate an average value of d_e. Also calculate an average percent of positive and negative reinforcement using the above d_e and the area of reinforcement of Step 6 in both vertical and horizontal directions. With the values of p (average) and Figure 4-11 (+) or 4-12 (+), determine the values of the constants F and calculate the moment of inertia of a cracked section with Equation 49b in both directions. Calculate the average cracked moment of inertia for the element using Equation 4-10, and also, the average moment of inertia of the element from Equation 4-7.

Step 11. Using Equation 3-33, and the modulus of elasticity of Step 9 and the moment of inertia of Step 10, calculate the unit flexural rigidity.

Step 12. Establish points of interest and their ultimate moment capacities (Figure 3-23 (+)).

Step 13. Compute properties of first yield.

a. Location of first yield.

b. Resistance at first yield r_e.

c. Moments at remaining points consistent with r_e.

d. Maximum deflection at first yield.

Step 14. Compute properties at second yield.

a. Remaining moment capacity at other points.

b. Location of second yield.

c. Change in unit resistance Δr, between first and second yield.

d. Unit resistance at second yield r_{ep}.

e. Moment at remaining points consistent with r_{ep}.

f. Change in maximum deflection.

g. Total maximum deflection.

Note: An element with unsymmetrical support conditions may exhibit three or four support yields. Therefore, repeat Step 14 as many times as necessary to obtain properties at various yield points.

Step 15. Compute properties at final yield (ultimate unit resistance).

a. Ultimate unit resistance.

b. Change in resistance between ultimate unit resistance and resistance at prior yield.

c. Change in maximum deflection (for elements supported on two, three or four edges, use stiffness obtained from Figure 3-26 (+), 3-30 (+) and 3-36 (+), respectively).

d. Total maximum deflection.

Step 16. Draw the actual resistance-deflection curve (Figure 3-39 (+)).

Step 17. Calculate equivalent maximum elastic deflection of the element.

Step 18. Calculate the equivalent elastic unit stiffness K_E from Equation 3-36.

Step 19. Determine the load-mass factor K_{LM} for the elastic, elasto-plastic and plastic ranges from Table 3-13 (+) and Figure 3-44 (+). The average load mass factor is obtained by taking the average K_{LM} for the elastic and elasto-plastic ranges and averaging this value with the K_{LM} of the plastic range. In addition, calculate the unit mass of the element (account for reduced concrete thickness if spalling is anticipated) and multiply this unit mass by K_{LM} for the element to obtain the effective unit mass of the element.

Note: For one-way elements, use Table 3-12 (+) to determine the average load mass factor.

Step 20. Using the effective mass of Step 19 and the equivalent stiffness, calculate the natural period of vibration T_N from Equation 3-60.

Step 21. Determine the response chart parameters:

a. Peak pressure P (Step 1).

b. Peak resistance r_u (Step 8).

c. Duration of load T (Step 1).

d. Natural period of vibration T_N (Step 20).

Also calculate the ratios of peak pressure P to peak resistance r_u and duration T to period T_N. Using these ratios and the response charts of Chapter 3, determine the value of X_m/X_E and t_m/T_N. Compute the value of X_m and compare it to the maximum permissible deflection of Step 1, and if found satisfactory, proceed to Step 22. If comparison is unsatisfactory, repeat Steps 2 to Step 21. In addition, compute the value of t_m/t_o from t_m/T_N and T/T_N and assuming that $T = t_o$, determine whether or not correct procedure has been used; for elements to respond to the pressure-time relationship, $0.1 < t_m/t_o < 3$.

Step 22. Using the ultimate resistance of Step 8, the value of d_e of Step 6 and equations of Table 4-7 (+/+), calculate the ultimate diagonal tension shear stresses at distance d_e from each support. Also calculate the shear capacity of the element from Equation 4-23. If the capacity is greater than that produced by the load, shear reinforcement is not required. However, if the shear produced by the load is greater than the capacity, then shear reinforcement must be added to resist the excess.

Note: For one-way elements, use Table 4-6 (+/+) to establish diagonal tension shear stress.

Step 23. Using the equations of Table 3-10 (+) or 3-11 (+) and the ultimate resistance of Step 8, calculate the shear at the supports. Determine required area of diagonal bars using Equation 4-30. However, if section Type I is used, then the minimum diagonal bars must be provided (Equation 4-31).

Note: For one-way elements, use Table 3-9 (+) to calculate the shear at the supports.

EXAMPLE 4A-1. ELEMENTS DESIGNED FOR THE PRESSURE-TIME RELATIONSHIP

Required: **Design a wall which spans in two directions and is fully restrained at all supports for a given blast load.**

Solution:

Step 1. Given:

a. Pressure-time loading (Figure 4A-1 (+)).

b. Maximum deflection equal to 3 times elastic deflection.

c. L = 180 in, H = 144 in and fixed on four sides (Figure 4A-1).

d. Type I cross section.

Figure 4A-1

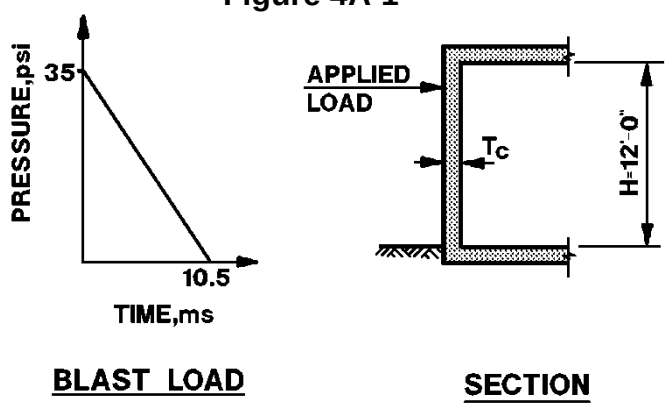

Step 2. Select cross section of element and static stress of reinforcement and concrete (Figure 4A-2 (+)).

Figure 4A-2

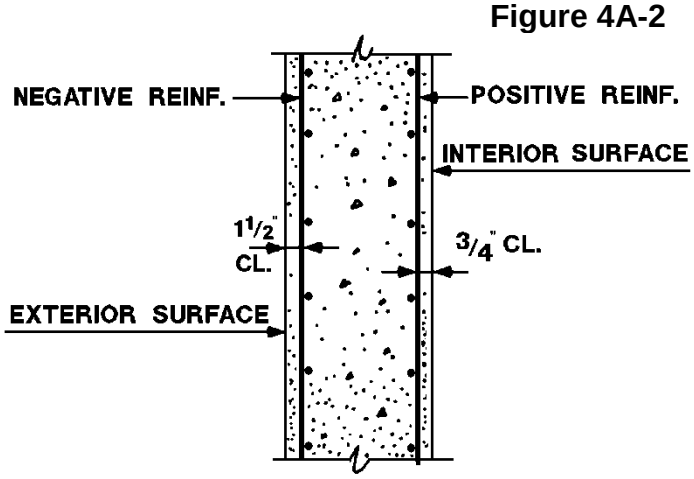

f'_c = 4,000 psi
f_y = 66,000 psi
Assume T_c = 12 in and concrete cover as shown.

Step 3. Determine dynamic stresses.

a. Dynamic increase factors - *DIF* (Table 4-1 (+)).

Concrete:

Bending - 1.19

Diagonal tension - 1.00

Reinforcement:

Bending - 1.17

Diagonal tension - 1.00

Direct shear - 1.10

b. Dynamic strength of materials

Concrete (f'_{dc}):

Compression - 1.19 (4,000) = 4,760 psi

Diagonal tension - 1.00 (4,000) = 4,000 psi

Reinforcement (f_{dv}):

Bending - 1.17 (66,000) = 77,200 psi

Diagonal tension - 1.00 (66,000) = 66,000 psi

Direct shear - 1.10 (66,000) = 72,600 psi

Step 4. Dynamic design stresses from Table 4-2 (+).

Concrete (f'_{dc}):

Compression - 4,760 psi

Diagonal tension - 4,000 psi

Reinforcement ($f_{ds} = f_{dy}$):

Bending - 77,200 psi

Diagonal tension - 66,000 psi

Direct shear - 72,600 psi

Step 5. In order to obtain optimum steel ratio p_V/p_H, set $x = H/2$ to have 45 degrees yield lines.

$$\frac{x}{L} = \frac{H}{2L} = \frac{144}{2 \times 180} = 0.40$$

From Figure 3-17 (+),

$$\frac{L}{H}\left[\frac{M_{VN}+M_{VP}}{M_{HN}+M_{HP}}\right]^{1/2}=1.43$$

Therefore,

$$\frac{M_{VN}+M_{VP}}{M_{HN}+M_{HP}}=\left[\frac{1.43\times 144}{180}\right]^{2}=1.31$$

Try No. 4 bars at 10 in o.c. in vertical direction, and No. 4 bars at 12 in o.c. in horizontal direction.

Step 6. Calculate d_c and steel ratios for each direction against minimum reinforcement ratios from Table 4-3 (+).

Vertical:

Vertical reinforcement bars are No. 4 at 10 in o.c. from Step 5.

A_{sV} = 0.20 *x* 12/10 = 0.24 in^2/ft^2

Negative moment d_v = 12 - 1.5 - 0.25 = 10.25 in

Positive moment d_v = 12 - 0.75 - 0.25 = 11.0 in

$$p_v=\frac{A_{sV}}{bd_V}=\frac{0.24}{12X11.0}=0.00182 >$$

$$p_{min}=\frac{1.875\sqrt{f'_c}}{f_y}=\frac{1.875\sqrt{4{,}000}}{66{,}000}=0.00180 \quad \text{O.K.}$$

Horizontal:

Horizontal reinforcement bars are No. 4 at 12 in o.c. from Step 5.

A_{sH} = 0.20 *X* 12/12 = 0.20 in^2/ft^2

Negative moment d_H = 10.25 - 0.25 - 0.25 = 9.75 in

Positive moment d_H = 11.0 - 0.25 - 0.25 = 10.5 in

$$p_H=\frac{A_{sH}}{bd_H}=\frac{0.20}{12X10.5}=0.00158 >$$

$$p_{min}=\frac{1.25\sqrt{f'_c}}{f_y}=\frac{1.25\sqrt{4{,}000}}{66{,}000}=0.0012 \qquad \text{O.K.}$$

Step 7. Calculate moment capacity of both positive and negative reinforcement in both directions.

a. Depth of equivalent rectangular stress blocks.

$$a = \frac{A_s f_{ds}}{0.85 b f'_{dc}} \qquad \text{(Equation 4-12)}$$

$$a_V = \frac{0.24 \times 77{,}200}{0.85 \times 12 \times 4760} = .382 \text{ in}$$

$$a_H = \frac{0.20 \times 77{,}200}{0.85 \times 12 \times 4760} = .318 \text{ in}$$

b. Moment capacity (Equation 4-11)

$$M_u = \frac{A_s f_{ds}}{b}(d - a/2)$$

$$M_{VN} = \frac{0.24(77{,}200)(10.25 - .382/2)}{12} = 15531 \text{ in} - \text{lb/in}$$

$$M_{VP} = \frac{0.24(77{,}200)(11.0 - .382/2)}{12} = 16689 \text{ in} - \text{lb/in}$$

$$M_{HN} = \frac{0.20(77{,}200)(9.75 - .318/2)}{12} = 12340 \text{ in} - \text{lb/in}$$

$$M_{HP} = \frac{0.20(77{,}200)(10.5 - .318/2)}{12} = 13305 \text{ in} - \text{lb/in}$$

Step 8. Determine ultimate resistance of the element.

$$\frac{L}{H}\left[\frac{M_{VN} + M_{VP}}{M_{HN} + M_{HP}}\right]^{1/2} = \frac{180}{144}\left[\frac{15531 + 16689}{12340 + 13305}\right]^{1/2} = 1.40 = 1.43 \, (step5)$$

From Figure 3-17 (+),

$$\frac{x}{L} = 0.405$$

$$x = 0.405 \times 180 = 72.9 \text{ in}$$

Ultimate resistance (Table 3-2 (+))

$$r_u = \frac{5(M_{HN} + M_{HP})}{x^2} = \frac{5(12{,}340 + 13{,}305)}{(72.9)^2} = 24.13 \text{ psi}$$

Step 9. Determine modulus of elasticity and modular ratio.

a. Concrete (Equation 4-4)

$E_c = w^{1.5}\ 33\ (f'_c)^{1/2} = (150)^{1.5}\ (33)(4000)^{1/2}$

$= 3.83\ X\ 10^6$ psi

b. Steel (Equation 4-5)

$E_s = 29\ x\ 10^6$ psi

c. $$n = \frac{E_s}{E_c} = \frac{29 \times 10^6}{3.83 \times 10^6} = 7.56$$ (Equation 4-6)

Step 10. Determine average moment of inertia for an inch strip.

a. Gross moment of inertia (Equation 4-9a)

$$I_g = \frac{T_c^{\ 3}}{12} = \frac{12^3}{12} = 144 \text{ in}^4 / \text{in}$$

b. Moment of inertia of cracked section (Equation 4-9b)

Vertical direction:

$$d_{(avg)} = \frac{10.25 + 11.0}{2} = 10.625 \text{ in}$$

$$p_{(avg)} = \frac{A_s}{bd_{(avg)}} = \frac{0.24}{12(10.625)} = 0.00188$$

Therefore,

$F = 0.0102$ (Figure $4-12$)

$$I_{cV} = Fd_{(avg)}^{\ 3} = 0.0102 \times (10.625)^3 = 12.2 \text{ in}^4/\text{in}$$

Horizontal direction:

$$d_{(avg)} = \frac{9.75 + 10.5}{2} = 10.125 \text{ in}$$

$$p_{(avg)} = \frac{0.20}{12(10.125)} = 0.00165$$

Therefore,

$F = 0.0092$

$$I_{cH} = 0.0092 \times (10.125)^3 = 9.5 \text{ in}^4/\text{in}$$

c. Average moment of inertia of cracked section.

$$I_c = \frac{LI_{cV} + HI_{cH}}{L + H}$$

$$I_c = \frac{(180 \times 12.2) + (144 \times 9.5)}{180 + 144} = 11.0 \text{ in}^4/\text{in}$$

(Equation 4-10)

d. Average moment of inertia (Equation 4-7)

$$I_a = \frac{I_g + I_c}{2} = \frac{144.0 + 11.0}{2} = 77.5 \text{ in}^4/\text{in}$$

Step 11. Calculate unit flexural rigidity.

$$D = \frac{E_c I_a}{1 - \nu^2}$$

(Equation 3-33)

Use ν = 0.167 for concrete

Therefore,

$$D = \frac{(3.83 \times 10^6)77.5}{1 - (0.167)^2} = 305.34 \times 10^6 \text{ in} - \text{lb}$$

Step 12. For points of interest, see Figure 4A-3 (+).

Step 13. Properties at first yield.

From Figure 3-33 (+) of Chapter 3 for *H*/*L* = 0.80

Figure 4A-3

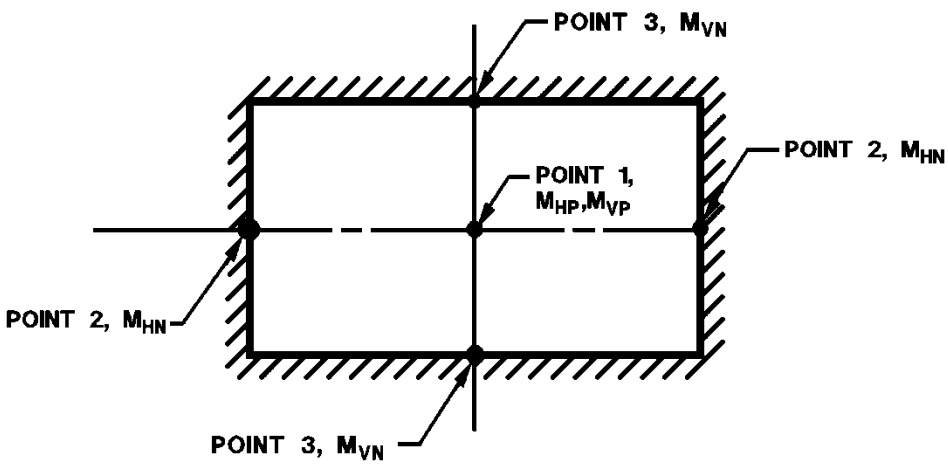

$ß_{1H}$ = 0.023 $ß_2$ = 0.056

$ß_{1V}$ = 0.031 $ß_3$ = 0.068

$\gamma_1 = 0.0018$

a. $M_{Hp} = 13.305$ in-lbs/in $M_{HN} = 12{,}340$ in-lbs/in

$M_{Vp} = 16{,}689$ in-lbs/in $M_{VN} = 15{,}531$ in-lbs/in

$M = ßrH^2$ Therefore, $r = M/ßH^2$ (Equation 3-25)

$r_{1H} = 13{,}305/[0.023(144)^2] = 27.90$ psi

$r_{1V} = 16{,}689/[0.031\ (144)^2] = 25.96$ psi

$r_2 = 12{,}340/[0.056(144)^2] = 10.63$ psi

$r_3 = 15{,}531/[0.068(144)^2] = 11.01$ psi

First yield at point 2 (smallest r).

b. $r_e = 10.63$ psi

c. $M_{1H} = (0.023)(10.63)(144)^2 = 5{,}070$ in-lbs/in

$M_{1V} = (0.031)(10.63)(144)^2 = 6{,}833$ in-lbs/in

$M_3 = (0.068)(10.63)(144)^2 = 14{,}989$ in-lbs/in

d. $X_e = \gamma_1 r_e H^4/D$ (Equation 3-32)

$X_e = (0.0018)(10.63)(144)^4/305.34\ x\ 10^6 = 0.0269$ in

Step 14. Properties at second yield.

After first yield element assumes a simple-simple-fixed-fixed configuration, therefore, Figure 3-34 (+) for $H/L = 0.80$.

$ß_{1H} = 0.020$

$ß_{1V} = 0.039$ $ß_3 = 0.076$

$\gamma_1 = 0.0022$

a. $M_{1H} = M_{HP} - M_{1H}$ (at r_e) = 13,305 - 5,070 = 8,235 in-lbs/in

$M_{1V} = M_{VP} - M_{1V}$ (at r_e) = 16,689 - 6,833 = 9,856 in-lbs/in

$M_3 = M_{VN} - M_3$ (at r_e) = 15,531 - 14,989 = 542 in-lbs/in

b. $\Delta r = \dfrac{M}{\beta H^2}$

$$\Delta r_{1H} = \frac{8{,}235}{0.020(144)^2} = 19.86 \text{ psi}$$

$$\Delta r_{1V} = \frac{9{,}856}{0.039(144)^2} = 12.19 \text{ psi}$$

$$\Delta r_3 = \frac{542}{0.076(144)^2} = 0.34 \text{ psi}$$

Second yield at point 3 (smaller Δr)

c. Δr = 0.34 psi

d. $r_{ep} = r_e + \Delta r$ = 10.63 + 0.34 = 10.97 psi (Equation 3-26)

e. $M_{1H} = (0.020)(0.34)(144)^2 + 5{,}070 = 5{,}211$ in-lbs/in

$M_{1V} = (0.039)(0.34)(144)^2 + 6{,}833 = 7{,}108$ in-lbs/in

f. $\Delta X = \gamma_1 \Delta r H^4/D$

$\Delta X = (0.0022)(0.34)(144)^4/305.34 \times 10^6 = 0.0011$ in

g. $X_{ep} = X_e + \Delta X = 0.0269 + 0.0011 = 0.028$ in

Step 15. Properties at final yield (ultimate unit resistance). After second yield element assumes a simple-simple-simple-simple configuration, therefore, from Figure 3-36 (+) for H/L = 0.80.

$\gamma_1 = 0.0054$

a. r_u = 24.13 psi (from Step 8)

b. $\Delta r = r_u - r_{ep} = 24.13 - 10.97 = 13.16$ psi

c. $\Delta X = \gamma_1 \Delta r H^4/D$

$\Delta X = (0.0054)(13.16)(144)^4/305.34 \times 10^6 = 0.100$ in

d. $X_p = X_{ep} + \Delta X = 0.028 + 0.100 = 0.128$ in

Step 16. For actual resistance deflection curve, see Figure 4A-4 (+).

Step 17. Equivalent elastic deflection from Equation 3-35.

Figure 4A-4

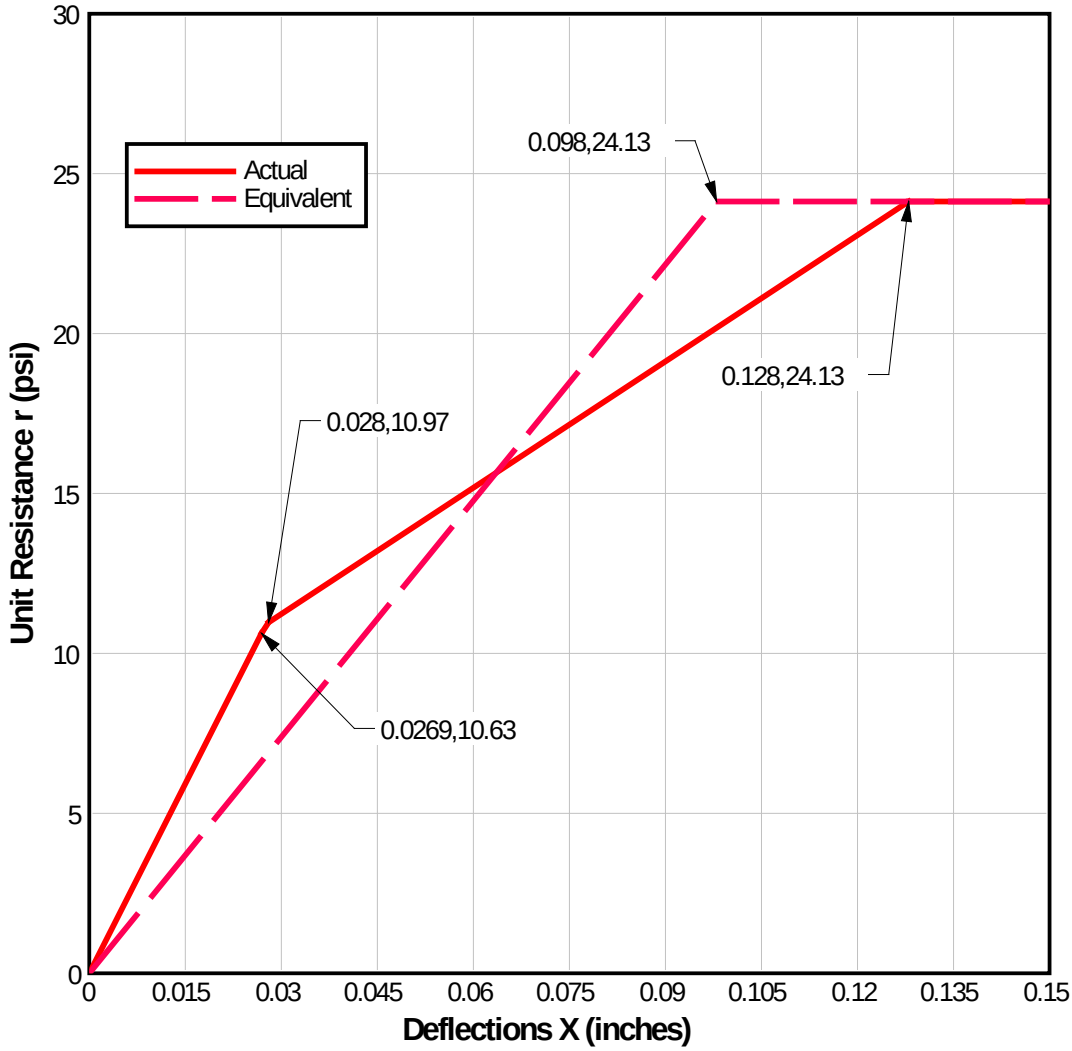

$$X_E = X_e(r_{ep}/r_u) + X_{ep}[1 - (r_e/r_u)] + X_p[1 - (r_{ep}/r_u)]$$

$$X_E = 0.0269\ (10.97/24.13) + 0.028\ [1 - (10.63/24.13]$$

$$+ 0.128\ [1 - (10.97/24.13)] = 0.098 \text{ in}$$

The equivalent resistance-deflection curve is shown in Figure 4A-4 (+).

Step 18. Calculate equivalent elastic stiffness.

$$K_E = \frac{r_u}{X_E} = \frac{24.13}{0.098} = 246.2 \text{ psi/in} \qquad \text{(Equation 3-36)}$$

Step 19. Calculate effective mass of element.

a. Load mass factors (Table 3-13 (+) and Figure 3-44 (+)).

$L/H = 1.25 \quad x/L = 0.405$

Elastic range - K_{LM} = 0.61 + 0.16 (1.25-1) = 0.65

Elasto-plastic range:

two simple edges - K_{LM} = 0.62 + 0.16(1.25-1) = 0.66

four simple edges - K_{LM} = 0.63 + 0.16(1.25-1) = 0.67

Plastic range - K_{LM} = 0.54

$$K_{LM}(avg.\ elastic\ and\ elasto\text{-}plastic) = \frac{0.65 + 0.66 + 0.67}{3} = 0.66$$

$$K_{LM}(avg.\ elastic\ and\ plastic) = \frac{0.66 + 0.54}{2} = 0.60$$

b. Unit mass of element.

$$m = \frac{wT_c}{g} = \frac{150 \times (1) \times 10^6}{32.2(1728)} = 2{,}700\,psi - ms^2 / in$$

c. Effective unit mass of element.

$m_e = K_{LM}m$ = 0.60 (2,700) = 1,620 psi-ms^2/in

Step 20. Calculate natural period of vibration.

$$T_N = 2\pi\left[\frac{m_e}{K_E}\right]^{1/2} \qquad \text{(Equation 3-60)}$$

$$T_N = 2(3.14)\left[\frac{1{,}620}{246.2}\right]^{1/2} = 16.1\,\text{ms}$$

Step 21. Determine response chart parameters (Figure 3-64a (+))

Peak pressure P = 35 psi (Step 1)

Peak resistance r_u = 24.13 psi (Step 8)

Duration T = 10.5 ms (Step 1)

Period of vibration T_N = 16.1 ms (Step 20)

P/r_u = 35/24.13 = 1.45 T/T_N = 10.5/16.1 = 0.65

From Figure 3-64a (+):

X_m/X_E = 2.8 < 3 (Step 1)

Therefore, use assumed section

$t_m/T_N = 0.60$ (Figure 3-64a (+))

$$t_m / t_o = t_m / T = \frac{t_m / T_N}{T / T_N} = \frac{0.60}{0.65} = 0.923$$

The correct procedure has been used since $t_m/t_o = 0.923$ is within the range, $0.1 < t_m/t_o < 3$.

Step 22. Check diagonal tension at d_e distance from support.

a. Ultimate shear stress (Table 4-7 (+/+)).

$$V_{uH} = \frac{3r_u(1 - d_e / x)^2}{d_e / x(5 - 4d_e / x)} \quad \text{where } d_e = d_H \text{ (of negative moment)}$$

$$V_{uH} = \frac{3 \times 24.13(1 - 9.75 / 72.9)^2}{(9.75 / 72.9)[5 - 4(9.75 / 72.9)]} = 91.0 psi$$

$$V_{uV} = \frac{3r_u(0.5 - d_e / H)(1 - x / L - 2d_e x / HL)}{d_e / H(3 - x / L - 8d_e x / HL)}$$

where $d_e = d_V$ (of negative moment)

$$V_{uV} = \frac{3 \times 24.13(0.5 - 10.25 / 144)(1 - 0.405 - 2 \times 0.405 \times 10.25 / 144)}{(10.25 / 144)(3 - 0.405 - 8 \times 0.405 \times 10.25 / 144)}$$

$$= 99.1 psi$$

b. Allowable shear stress (Equation 4-23)

$v_c = [1.9 (f'_{dc})^{1/2} + 2{,}500\, p] \leq 3.50 (f'_c)^{1/2} = 221.4$ psi

where p is the steel ratio at support

$$v_{cH} = 1.9(4{,}000)^{1/2} + \left[\frac{2{,}500(0.20)}{12(9.75)}\right] = 122.4\, psi > 91.0\, psi$$

$$v_{cV} = 1.9(4{,}000)^{1/2} + \left[\frac{2{,}500(0.24)}{12(10.25)}\right] = 125.0\, psi > 99.1 psi$$

Therefore, no stirrups required

Step 23. Determine minimum area of the diagonal bars (cross section Type I).

$A_d = v_c\, bd/f_{ds} \sin\alpha$ (Equation 4-31)

where d is equal to d_e at support.

Using α = 45°,

A_{dH} = 124.4 (12 *x* 9.75)/72,600 (0.707) = 0.283 in^2/ft

A_{dV} = 125.0 (12 *x* 10.25)/72,600 (0.707) = 0.300 in^2/ft

use #5 diagonal bars @ 12"

PROBLEM 4A-2. PRELIMINARY FLAT SLAB DESIGN FOR LARGE DEFLECTION

Problem: Design a flat slab for large deflections.

Procedure:

Step 1. Establish design parameters:

a. Blast loads including pressure-time relationship (Chapter 2).

b. Deflection criteria.

c. Structural configuration including geometry and support conditions.

d. Type of section available to resist blast, Type I, II or III depending upon the occurrence of spalling and/or crushing of the concrete cover.

Step 2. Select cross section of the slab and the column or column capital. Include concrete cover over reinforcement and maximum size of the reinforcing bars in the flat slab. Also determine allowable static stresses of concrete and reinforcing steel (Section 4-12).

Step 3. Determine dynamic increase factors for both concrete and reinforcement from Table 4-1 (+). Using the above *DIF* and the allowable static stresses of Step 2, calculate the dynamic strength of materials.

Step 4. Determine the dynamic design stresses using Table 4-2 (+) and the results from Step 3.

Step 5. Determine the ratio of the flexural stiffness of the wall to slab in both directions using Equations 4-50, 4-51, 4-62 and 4-73.

Step 6. Proportion total span moments to unit column and midstrip moments in both directions using Equations 4-52 through 4-60 and 4-63 through 4-71.

Note: Use equivalent frame method for the direction(*s*) with only two spans.

Step 7. Adjust unbalanced negative unit moment at column and midstrip in both directions of the roof. Correct the corresponding positive moments to maintain the same total span moments.

Step 8. Calculate total external work done by r_u from Equation 4-74 using yield line patterns similar to Figure 4-24 (+). Use uniform deflection (Δ) for all positive yield lines.

Step 9. Calculate total internal work done using Equation 4-76 and the unit moments determined in Steps 6 and 8.

Step 10. Equate the total external work to the internal work (Equation 4-77). Solve the resulting equation for the ratio of r_u/M_{oH}. Use Equations 4-61 and 4-72 to substitute M_{oL} with M_{oH}.

Step 11. Determine the minimum value of r_u/M_{oH} by trial and error procedure. Vary the assumed value of one of the yield location variables while assuming a constant value for the rest to find the minimum r_u/M_{oH}. Repeat until all yield line location variables are established (X, Y, W and Z). The last step will yield the final minimum value of r_u/M_{oH} to be used in the following steps.

Step 12. Calculate the load-mass factor for the flat slab using the procedure outlined in Chapter 3, for two-way elements. Use Equation 3-59 for the slab sectors with no drop panel and Equation 3-58 for the slab sectors with drop panel.

Step 13. Calculate effective unit mass of the slab using the larger d_e of the assumed slab section from Step 2 and Equation 3-54.

Step 14. Calculate the maximum deflection of the flat slab using the shortest sector length (L_s).

Step 15. Determine the required unit resistance (r_{avail} in Equation 4-90) to resist the given impulse loading (Chapter 2) and the values from Steps 13 and 14. Check that the correct procedure was used.

Step 16. Determine the uniform dead load of the flat slab and calculate the ultimate resistance of the slab (r_u) from Equation 4-90.

Step 17. Determine the required total panel moments in each direction using the ultimate resistance from Step 16, the minimum value of r_u/M_{oH} from Step 11 and the ratio of M_{oL} to M_{oH} established in Step 10.

Step 18. Calculate the minimum required unit moments in each direction from Step 6 or 7 using the values of M_{oL} and M_{oH} from Step 17.

Step 19. Calculate the minimum moment capacity of the slab section in each direction by choosing reinforcing bars. These capacities should be equal to or slightly larger than the corresponding moments from Step 18. Also check for minimum reinforcing ratios from Table 4-3 (+).

Step 20. Determine provided resistance in each direction by using the ratios provided to required unit moments from Steps 18 and 19. Find the average of these values to establish the unit resistance of the flat slab.

Step 21. Determine ultimate tension membrane capacity of the flat slab using Equation 4-85. Find the average of continuous steel in the mid and column strip using: unit moment ratios from Step 6 or 7 and Step 19. Use f_{ds} for bending from Step 4 in calculating unit tension forces in the continuous reinforcement, in each span direction.

Step 22. Calculate diagonal tension stresses at d_e distance from the edge of wall supports according to Section 4-31.2 in both directions. Determine concrete capacity in diagonal tension from Equation 4-23 using the ratios of unit moments from Steps 6 or 7 and the reinforcing ratios from Step 19. If the diagonal tension stresses are larger than the concrete capacity, single leg stirrups should be used or a drop panel be added along the wall in lieu of a change in flat slab cross section. If drop panels are used, the diagonal shear stress at d_e distance from the edge of wall drop panel must also be checked.

Step 23. Check punching shear $d_e/2$ distance out and around the column or column capital. Use the load area between positive yield lines minus the area supported by column or its capital. If the shear stress is larger than $4(f'_c)^{1/2}$, use a column drop panel and check the punching shear with the new thickness of the slab over the column.

Step 24. Determine the size of column drop panel by checking punching shear $d_e/2$ distance out and around the drop panel.

Step 25. Check one-way diagonal shear stress between positive yield lines d_e distance out from the column drop panel in each direction. Use Equation 4-23 to find concrete capacity. Increase column drop panel size if required or use single leg shear stirrups according to Section 4-18.3.

Step 26. Check one-way diagonal shear stress between positive yield lines for an average d_e distance out from the column capital similar to Step 25. Average d_e is based on the width of the drop panel to the total width. Increase column drop panel width or thickness if required.

Step 27. Assume preliminary reinforcement for the flat slab using unit moment ratios from Step 6 and 7, M_{oL} and M_{oH} from Step 17 and Equation 4-19 with the slab thicknesses established throughout this procedure. Calculate all actual unit moment capacities.

Note: Check the actual flat slab resistance using unit moments from Step 27 and the established sizes and thicknesses of drop panels. Repeat Steps 8 to 27 for the actual values in each direction. Also provide diagonal bars at wall and column according to sections 4-19 and 4-31.2.

EXAMPLE 4A-2. PRELIMINARY FLAT SLAB DESIGN FOR LARGE DEFLECTION

Required: **Design of a flat slab with three equal spans in each direction for large deflections.**

Solution:

Step 1. Given:

a. P = 96 psi, T = 15 ms and triangular loading.

b. Maximum support rotation of 8 degrees.

c. $L = H$ = 240 in, continuous walls all around 207 in high and 21 in thick.

d. Type III cross section.

Step 2. Assume:

a. T_c = 15 in thickness of flat slab.

b. D = 45 in diameter of column capital.

c. Concrete cover: outside 2 in

inside 3/4 in

d. d = 3/4 in largest bar diameter.

e. f'_c = 4,000 psi compressive strength of concrete.

f. f_y = 66,000 psi yield stress of reinforcing bars.

g. f_u = 90,000 psi ultimate stress of reinforcing bars.

Step 3. Determine dynamic stresses.

a. Dynamic increase factors. *DIF* (Table 4-1 (+)).

Concrete:

Diagonal tension - 1.00

Reinforcement:

Bending, yield stress - 1.17

Bending, ultimate stress - 1.05

Direct shear yield stress - 1.10

Direct shear ultimate stress - 1.00

b. Dynamic strength of materials.

Concrete:

Diagonal tension (f'_c) - 1.00 (4,000) = 4,000 psi

Reinforcement:

Bending (f_{dv}) - 1.17 *X* 66,000 = 77,220 psi

Bending (f_{du}) - 1.05 *X* 90,000 = 94,500 psi

Direct shear (f_{dv}) - 1.10 *X* 66,000 = 72,600 psi

Direct shear (f_{du}) - 1.00 *X* 90,000 = 90,000 psi

Step 4. Dynamic design stresses from Table 4-2 (+).

Concrete (f'_c):

Diagonal tension - 4,000 psi

Reinforcement (f_{ds}):

$f_{ds} = (f_{dy} + f_{du})/2$

Bending - 85,860 psi

Direct shear - 81,300 psi

Note: Since the structure is symmetrical in both directions, the calculations will be done only in one direction in Steps 5 through 9, 12, 17 through 22, 25 and 26.

Step 5. Determine the ratio of the flexural stiffness of the wall to the roof slab.

$$\alpha_{ecH} = \frac{T_w{}^3 H}{T_s{}^3 H_w} = \frac{21^3 \times 240}{15^3 \times 207} = 3.18 \qquad \text{(Equation 4-50)}$$

$$\alpha'_{ecH} = \frac{1}{1 + 1/\alpha_{ecH}} = \frac{1}{1 + 1/3.18} = 0.76 \qquad \text{(Equation 4-62)}$$

Step 6. Calculate unit moments using Equations 4-52 through 4-60. See Figure 4A-5 (+) for locations.

$m^-_1 = 0.65\ \alpha'_{ecH}\ M_{oH}/L = 0.65\ (0.76)\ M_{oH}/240 = (0.494)\ M_{oH}/240$

$m^+_2 = 0.40\ (0.63 - 0.28\ \alpha'_{ecH})\ M_{oH}/(L - H/2)$

$= 0.40(0.63 - 0.28\ x\ 0.76)\ M_{oH}/(240 - 240/2)$

$= (0.334)\ M_{oH}/240$

$m^-_3 = 3.25\ (0.75 - 0.10\ \alpha'_{ecH})\ M_{oH}/(L - H/2)$

$= 0.25(0.75 - 0.10\ x\ 0.76)\ M_{oH}/(240 - 240/2)$

$= (0.337)\ M_{oH}/240$

$m^-_4 = 0.25\ (0.65) M_{oH}/(L - H/2)$

$= 0.25\ x\ 0.65\ M_{oH}/(240 - 240/2) = (0.325) M_{oH}/240$

$m^+_5 = 0.40\ (0.35) M_{oH}/(L - H/2)$

$= 0.40\ x\ 0.35\ M_{oH}/(240 - 240/2) = (0.280) M_{oH}/240$

$m^+_6 = 0.60\ (0.63 - 0.28\ \alpha'_{ecH})\ M_{oH}/(H/2)$

$= 0.60\ (0.63 - 0.28\ x\ 0.76)\ M_{oH}/(240/2) = (0.501) M_{oH}/240$

$m^-_7 = 0.75\ (0.75 - 0.10\ \alpha'_{ecH})\ M_{oH}/(H/2)$

$= 0.75\ (0.75 - 0.10\ x\ 0.76)\ M_{oH}/(240/2) = (1.011) M_{oH}/240$

$m^-_8 = 0.75(0.65) M_{oH}/(H/2) = 0.75(0.65) M_{oH}/(240/2)$

$= (0.975) M_{oH}/240$

$m^-_9 = 0.60\ (0.35) M_{oH}/(H/2) = 0.60\ (0.35) M_{oH}/240/2$

$= (0.420) M_{oH}/240$

Figure 4A-5

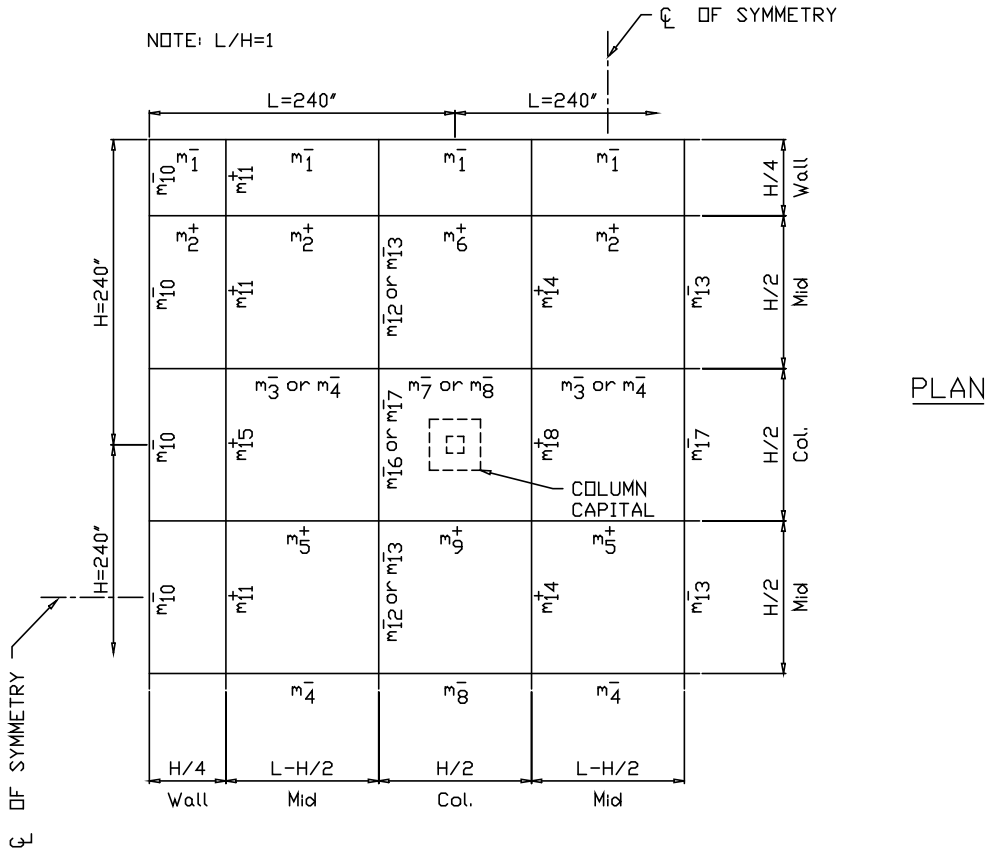

Step 7.

a. Balance the negative unit moment over the column and midstrip.

$m^-_3 > m^-_4$ Therefore, $m^-_3 = m^-_4 = (0.337)\ M_{oH}/240$

$m^-_7 > m^-_8$ Therefore, $m^-_7 = m^-_8 = (1.011)\ M_{oH}/240$

b. Adjust the corresponding positive unit moment in order to keep total panel moments equal.

Adjusted $m^+_5 = m^+_5 - 2(m^-_3 - m^-_4)$

Therefore, $m^+_5 = [0.280 - 2(0.337 - 0.325)]M_{oH}/240$

$= (0.256)\ M_{oH}/240$

Adjusted $m^+_9 = m^+_9\ \ 2(m^-_7 - m^-_8)$

Therefore, $m^+_9 = [0.420 - 2\ (1.011 - 0.975)]M_{oH}/240$

$= (0.348)M_{oH}/240$

Step 8. Calculate total external work for an assumed deflection of Δ. Use one quarter of the roof slab due to symmetry in both directions. See Figure 4A-6 (+) for yield lines and sectors.

Equivalent square column capital, C *X* C.

$$C = \left[\frac{\pi D^2}{4}\right]^{1/2} = \left[\frac{\pi(45)^2}{4}\right]^{1/2} = 39.9 \text{ in say } 40 \times 40 \text{ in}$$

$$W_I = W_{IV} = r_u\left[\left(\frac{3L}{2} - X\right)(X)\frac{\Delta}{2} + \left(\frac{X^2}{2}\right)\frac{\Delta}{3}\right]$$

$$= r_u\left[\left(\frac{3 \times 240}{2} - X\right)(X)\frac{\Delta}{2} + \left(\frac{X^2}{2}\right)\frac{\Delta}{3}\right]$$

$$W_{II} = W_V = r_u\left[C[H - C/2 - X]\frac{\Delta}{2} + \frac{1}{2}\left[\frac{3L}{2} - X - C\right]\left[H - \frac{C}{2} - X\right]\left[\frac{2\Delta}{3}\right]\right]$$

$$= r_u\left[40\left(240 - \frac{40}{2} - X\right)\frac{\Delta}{2} + \frac{1}{2}\left(\frac{3 \times 240}{2} - X - 40\right)\left(240 - \frac{40}{2} - X\right)\left(\frac{2\Delta}{3}\right)\right]$$

$$W_{III} = W_{VI} = r_u\left[\frac{C}{2}(H - C)\frac{\Delta}{2} + \frac{1}{2}\left(\frac{3L}{2} - X - C\right)\left(\frac{H - C}{2}\right)\left(\frac{2\Delta}{3}\right)\right]$$

$$= r_u\left[\frac{40}{2}(240 - 40)\frac{\Delta}{2} + \frac{1}{2}\left[\frac{(3)(240)}{2} - X - 40\right]\left(\frac{240 - 40}{2}\right)\left(\frac{2\Delta}{3}\right)\right]$$

From Equation 4-74.

$$W = \sum r_u A \Delta$$

$$W = \sum_{i=I}^{VI} W_i = \frac{r_u \Delta}{3}(243200 - 320X)$$

Step 9. Calculate total internal work for the assumed deflection of Δ. Use one quarter of the roof slab due to symmetry in both directions. See Figure 4A-6 (+) for angles of rotation.

$$\Theta_{1H} = \Theta_{1V} = \frac{\Delta}{X}$$

$$\Theta_{2H} = \Theta_{2V} = \frac{\Delta}{H - C/2 - X} = \frac{\Delta}{240 - 40/2 - X} = \frac{\Delta}{220 - X}$$

$$\Theta_{3H} = \Theta_{3V} = \frac{\Delta}{(H - C)/2} = \frac{\Delta}{(240 - 40)/2} = \frac{\Delta}{100}$$

Assume $0 < X < 3H/4 = 180$ in

$$E_I = E_{IV} = m_1^- \Theta_{1H}\left(\frac{3L - X}{2}\right) + \frac{2}{3} m_1^- \Theta_{1H}\left(\frac{X}{2}\right) + m_6^+ \Theta_{1H}\left(\frac{L}{2}\right) + m_2^+ \Theta_{1H}\left(L - \frac{X}{2}\right) + \frac{2}{3} m_2^+ \Theta_{1H}\left(\frac{X}{2}\right)$$

$$= \frac{M_{oH}\Delta}{(2)(240)X}\left[0.494\left[3(240) - \frac{X}{3}\right] + 0.501(240) + 0.334\left[2(240) - \frac{X}{3}\right]\right]$$

$$E_{II} = E_V = m_6^+ \Theta_{2H}\left(\frac{L}{2}\right) + m_2^+ \Theta_{2H}(L - X) + m_7^- \Theta_{2H}\left(\frac{L}{2}\right) + m_3^- \Theta_{2H}(L - X)$$

$$= \frac{M_{oH}}{(2)(240)} \times \frac{\Delta}{220 - X}\left[(0.501 + 1.011)240 + 2(0.334 + 0.337)(240 - X)\right]$$

$$E_{III} = E_{VI} = m_9^+ \Theta_{3H}\left(\frac{L}{2}\right) + m_5^+ \Theta_{3H}(L - X) + m_7^- \Theta_{3H}\left(\frac{L}{2}\right) + m_3^- \Theta_{3H}(L - X)$$

$$= \frac{M_{oH}}{(2)(240)} \times \frac{\Delta}{100}\left[(0.348 + 1.011)240 + 2(0.256 + 0.337)(240 - X)\right]$$

From Equation 4-75.

$$E = \sum m\Theta l$$

$$E = \sum_{i=I}^{VI} E_i = \frac{M_{oH}\left[139972.8 + 1331.76X - 9.7832X^2 + 0.01186X^3\right]}{240X(220 - X)}$$

Step 10. Set the external work equal to the internal work and solve the equation for the ratios of r_u/M_{oH}.

$W = E$

$$\frac{r_u \Delta}{3}(243200 - 320X) = \frac{M_{oH}\Delta\left[139972.8 + 1331.76X - 9.7832X^2 + 0.01186X^3\right]}{240X(220 - X)}$$

Therefore,

$$\frac{r_u}{M_{oH}} = \frac{139972.8 + 1331.76X - 9.7832X^2 + 0.01186X^3}{80X(220 - X)(243200 - 320X)}$$

Figure 4A-6

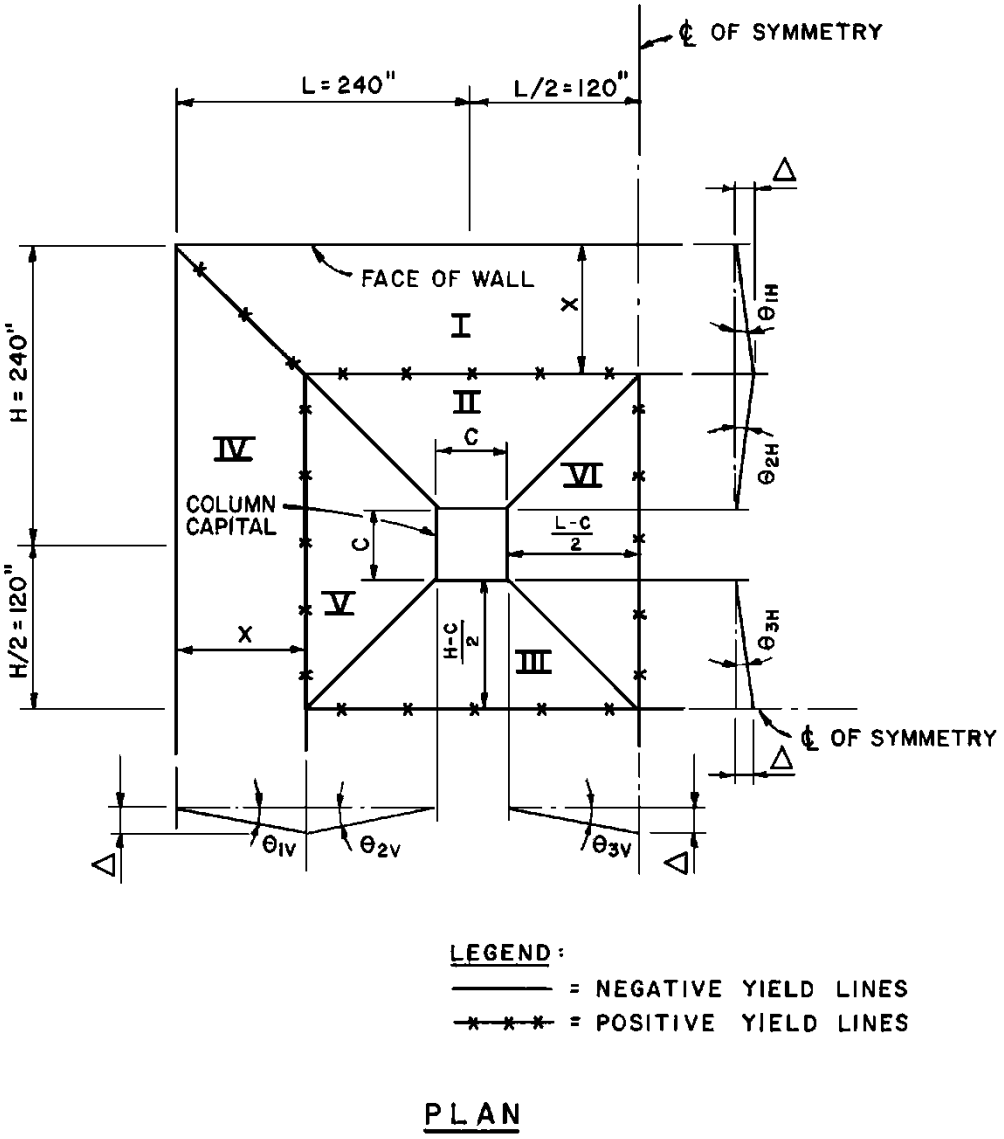

PLAN

Step 11. Minimize value of r_u/M_{oH} using the equation from Step 10 by assuming various values for X to locate the yield line locations.

***X* (in)**	**r_u/M_{oH} (psi/in-lbs)**	
110	913.212×10^{-9}	
115	911.686×10^{-9}	
120	912.445×10^{-9}	
116	911.654×10^{-9}	*minimum
117	911.713×10^{-9}	

Step 12. Calculate plastic load mass factor for the flat slab. See Section 4-30.5 and Figure 4A-6 (+).

$$\left(\frac{I}{cL_1}\right)_I = \left(\frac{I}{cL_1}\right)_{IV} = \frac{2}{3}X\left(\frac{3L}{2} - X\right) + \frac{1}{2}\left(\frac{X^2}{2}\right) = \frac{2}{3}(116)\left(\frac{3(240)}{2} - 116\right) + \frac{1}{2}\left(\frac{116^2}{2}\right)$$

$$\left(\frac{I}{cL_1}\right)_{II} = \left(\frac{I}{cL_1}\right)_{V} = \frac{2}{3}C\left(H - \frac{C}{2} - X\right) + \frac{3}{4}\left(H - \frac{C}{2} - X\right)\left(\frac{3L}{2} - C - X\right)/2$$

$$= \frac{2}{3}(40)\left(240 - \frac{40}{2} - 116\right) + \frac{3}{4}\left(240 - \frac{40}{2} - 116\right)\left(\frac{3(240)}{2} - 40 - 116\right)/2$$

$$\left(\frac{I}{cL_1}\right)_{III} = \left(\frac{I}{cL_1}\right)_{VI} = \frac{2}{3}C\frac{(H-C)}{2} + \frac{3}{4}(H-C)\left(\frac{3L}{2} - C - X\right)/4$$

$$= \frac{2}{3}(40)\frac{240-40}{2} + \frac{3}{4}(240-40)\left(\frac{3(240)}{2} - 40 - 116\right)/4$$

$$\sum_{i=I}^{VI}\left(\frac{I}{cL_1}\right)_i = 86558.67 in^2$$

$$A_I = A_{IV} = \frac{X}{2}(3L - X) = \frac{116}{2}(3 \times 240 - 116)$$

$$A_{II} = A_V = \left(H - \frac{C}{2} - X\right)\left(\frac{3L}{2} + C - X\right)/2$$

$$= \left(240 - \frac{40}{2} - 116\right)\left(\frac{3(240)}{2} + 40 - 116\right)/2$$

$$A_{III} = A_{VI} = (H - C)\left(\frac{3L}{2} + C - X\right)/4$$

$$= (240 - 40)\left(\frac{3(240)}{2} + 40 - 116\right)/4$$

$$\sum_{i=I}^{VI} A_i = 128{,}000.0 in^2$$

$$K_{LM} = \frac{\sum\left(\frac{I}{cL_1}\right)_i}{\sum A_i} = \frac{86558.67}{128{,}000.0} = 0.676 \quad \text{(eq. 3 - 59)}$$

Step 13. Calculate the unit mass of the slab.

d_c = 15 - 2 - 0.75 - (2 *x* 0.75)/2 = 11.5 in

$$m = \frac{W}{g} = \frac{11.5 \times 150 \times 1000^2}{12 \times 32.2 \times 1728} = 2583 \text{ psi} - \text{ms}^2/\text{in}$$

Determine effective unit mass from Equation 3-54.

$m_e = K_{LM}\ X\ m$ = 0.676 *x* 2583.5 = 1746.4 psi-ms^2/in

Step 14. Find maximum deflection using shortest sector length.

$$L_s = \frac{H - C}{2} = \frac{240 - 40}{2} = 100 \text{ in}$$
$$X_m = L_s \tan \Theta_{max} = 100 \times \tan 8 = 14.05 \text{ in}$$

Step 15. Determine impulse load and required resistance for blast.

$i_b = PT/2$ = (96.0 *x* 15.0) / 2 = 720.0 psi-ms

$$\frac{i_b^{\ 2}}{2m_u} = rX_m \qquad \text{(Equation 3-93)}$$

Therefore,

$$r = \frac{720.0^2}{2 \times 1746.4 \times 14.05} = 10.56 \text{ psi} = r_{avail}$$

Check for correct procedure.

$$t_m = \frac{i_b}{r} = \frac{720}{10.56} = 68.2 \text{ ms}$$
$$t_m / T = 68.2 / 15 = 4.55 > 3 \quad \text{O.K. (section 3 - 20)}$$

Step 16. Calculate uniform dead load of slab and the required ultimate resistance. Assume 150 psf concrete.

r_{DL} = 15/12 *x* 150/12^2 = 1.30 psi

$$r_{avail} = r_u - \frac{f_{ds}}{f_{dy}} r_{DL} \qquad \text{(Equation 4-90)}$$

$$\text{Required } r_u = 10.56 + \frac{85{,}860}{66{,}000} 1.30 = 12.25 \text{ psi}$$

Step 17. Calculate required panel moment using the required r_u from Step 16 and the r_u/M_{oH} from Step 11.

$$\text{Required } M_{oH} = \frac{r_u}{r_u / M_{oH}} = \frac{12.25}{911.654 \times 10^{-9}} = 13{,}437{,}115 \text{ in} - \text{lbs}$$

Step 18. Calculate the minimum required unit moments from Step 7.

$$\text{Minimum unit moment} = \mathrm{m}_5^+ = \frac{0.256 M_{oH}}{240}$$

Therefore,

$$m_5^+ = \frac{0.256 \times 13{,}437{,}115}{240} = 14333 \text{ in} - \text{lbs/in}$$

Step 19. Calculate actual moment capacity at $m^+{}_5$, assume No. 4 reinforcing bars 12 in o.c.

$$\mathrm{d_e} \text{ in H direction} = \mathrm{d_H} = 15 - 2 - 0.75 - 2 \times 0.75^* + 2 \times \frac{0.5}{2} = 11.25 \text{ in}$$

$$d_e \text{ in L direction} = \mathrm{d_V} = 15 - 2 - 0.75 - 2 \times 0.75^* - 2 \times \frac{0.5}{2} = 10.25 \text{ in}$$

*Assumed No. 6 reinforcing in Step 2.

$$M_u = \frac{A_s f_{ds} d_c}{b} \qquad \text{(Equation 4-19)}$$

$$M_{14}^+ = \frac{0.2 \times 85{,}860 \times 11.25}{12} = 16099 \text{ in} - \text{lb/in} > 14333 \ \textit{O.K.}$$

$$M_5^+ = \frac{0.2 \times 85{,}860 \times 10.25}{12} = 14668 \text{ in} - \text{lb/in} > 14333 \ \textit{O.K.}$$

$$p = \frac{A_s}{b d_e} \qquad \text{(Equation 4-13)}$$

$$p_{m14}^+ = \frac{0.20}{12 \times 11.25} = 0.0015 = 0.0015 \ \textit{O.K.}$$

$$p_{m5}^+ = \frac{0.20}{12 \times 10.25} = 0.0016 > 0.0015 \ \textit{O.K.}$$

Step 20. Calculate the provided unit resistance of the flat slab.

$$r_u \text{(provided)} = \mathrm{r_e} \text{(required)} \times \frac{m \text{ (unit moment provided)}}{\mathrm{m} \text{ (unit moment required)}}$$

$$(r_u)_{m14} = 12.25 \times \frac{16099}{14333} = 13.76 \text{ psi}$$

$$(r_u)_{m5} = 12.25 \times \frac{14668}{14333} = 12.54 \text{ psi}$$

$$r_u = \frac{(r_u)_{m14} + (r_u)_{m5}}{2} = \frac{13.76 + 12.54}{2} = 13.15 \text{ psi} > 12.25 \ \textit{O.K.}$$

Step 21. Estimate minimum area of continuous steel in column strip using unit moment ratios from Step 7.

$$(A_s)_{m9} = \frac{m_9^+}{m_5^+} \times (A_s)_{m5} = \frac{0.348\dfrac{M_{oH}}{240}}{0.256\dfrac{M_{oH}}{240}} \times 0.20 = 0.27 \text{ in}^2\text{/ft}$$

Calculate the average unit tension force in continuous steel.

$$T_L = \frac{(A_s)_{m5} H/2 + (A_s)_{m9}(L - H/2)}{b \times L} \times f_{ds} \times 2$$

$$= \frac{0.20 \times 240/2 + 0.27 \times (240 - 240/2)}{12 \times 240} \times 85{,}860 \times 2 = 3.362 \text{ lbs/in}$$

Calculate tension membrane resistance from Equation 4-85.

$$r_T = \frac{\pi^3 \times 1.5 \times X \times T_H / L_H{}^2}{4 \sum_{n=1,3,5} \left[\frac{1}{n^3} (-1)^{(n-1)/2} \left[1 - \frac{1}{cosh\left[\frac{n\pi L_L}{2L_H} \left[\frac{T_H}{T_L} \right]^{1/2} \right]} \right] \right]}$$

$$H_L = H - C = 240 - 40 = 200 in$$

$$r_T = \frac{\pi^3 \times 1.5 \times 14.05 \times 3{,}363/200^2}{4 \sum_{n=1,3,5} \left[\frac{1}{n^3} (-1)^{(n-1)/2} \left[1 - \frac{1}{cosh\left[\frac{n\pi(200)}{2(200)} \left[\frac{3{,}363}{3{,}363} \right]^{1/2} \right]} \right] \right]}$$

$$r_T = \frac{\pi^3 \times 1.5 \times 14.05 \times 3{,}363}{4 \times (200)^2 (0.6015 - 0.0364 + 0.0080)} = 23.97 \text{ psi} > 13.15 \text{ psi} \quad \text{O.K.}$$

Step 22. Calculate diagonal tension stresses at d_e distance from the edge of wall supports according to Section 4-31.2 in both directions.

$$r_u \times \text{Area(Sector I)} = V_V\left(\frac{3L-X}{2}\right)+\frac{2}{3}V_V\,\frac{X}{2}$$

$$13.15\left(\frac{3\times 240-116}{2}\right)116 = V_V\left(\frac{3\times 240-116}{2}\right)+\frac{2}{3}V_V\,\frac{116}{2}$$

$$V_V = \frac{460{,}670.2}{340.67} = 1352.3 \text{ lbs/in}$$

Total diagonal shear load in *L* direction.

$$V_{uV} = V_V\,\frac{3L-X}{2}+\frac{2}{3}V_V\left(\frac{X}{2}-d_V\right)$$

$$= 1352.3\left[\frac{3\times 240-116}{2}+\frac{2}{3}\left(\frac{116}{2}-10.25\right)\right] = 451{,}443 \text{ lbs}$$

Diagonal shear stress in *L* direction.

$$v_{uV} = \frac{V_{uV}}{\left(\frac{3L}{2}-d\right)d_V} = \frac{451{,}443}{\left(\frac{3\times 240}{2}-10.25\right)10.25} = 125.9 \text{ psi}$$

Estimate reinforcing ratio at support using the ratio of unit moments.

$$r_{m1} = r_{m5}\left(\frac{m1}{m5}\right) = 0.0016\left(\frac{0.494\frac{M_{oH}}{240}}{0.256\frac{M_{oH}}{240}}\right) = 0.0031$$

Calculate diagonal shear capacity of concrete.

$$v_c = 1.9(f'_c)^{1/2} + 2500p \qquad \text{(Equation 4-23)}$$

$$v_{cV} = 1.9(4000)^{1/2} + 2500(0.0031) = 127.9 \text{ psi} > 125.9 \text{ psi}$$

Therefore, No stirrups or wall drop panel required.

Note: Diagonal shear at d_e distance from the *H* direction wall will be less than the one in *L* direction due to symmetry and larger d_e in *H* direction. Calculation is not required.

Step 23. Check punching shear around column capital.

Use average d_e.

$$d_{avg} = \frac{d+d}{2} = \frac{10.25+11.25}{2} = 10.75 \text{ in}$$

Diameter of punching. $D_p = D + d_{avg} = 45 + 10.75 = 55.75$ in

Find area between positive yield lines minus column capacity.

$$Area = \left[\frac{3L}{2} - X\right]^2 - \frac{\pi D_p^{\ 2}}{4} = \left[\frac{3 \times 240}{2} - 116\right]^2 - \frac{\pi \times 55.75^2}{4}$$

$$= 57{,}095 \text{ in}^2$$

$$v(\text{punching}) = \frac{r_u \times Area}{\pi D_p d_{avg}} = \frac{13.15 \times 57{,}095}{\pi \times 55.75 \times 10.75} = 398.8 \text{ psi}$$

$$v_c = 4(f'_c)^{1/2} = 4(4000)^{1/2} = 253.0 \text{ psi} < 398.8 \text{ psi}$$

Therefore, need drop panel, assume 6 in

$$d_{avg}(revised) = 10.75 + 6 = 16.75 \text{ in}$$

$$D_p(revised) = 45 + 16.75 = 61.75 \text{ in}$$

$$Area(revised) = \left[\frac{3 \times 240}{2} - 116\right]^2 - \frac{\pi \times 61.75^2}{4} = 56{,}541 \text{ in}^2$$

$$v(punching) = \frac{13.15 \times 56{,}541}{\pi \times 61.75 \times 16.75} = 228.8 \text{ psi} < 253.0 \quad \text{O.K.}$$

Step 24. Assume 63 *x* 63 in drop panel. Check punching shear.

Punching Length = $l_p = l + d_{avg}$ = 63 + 10.75 = 73.75 in

$$Area = \left[\frac{3L}{2} - X\right]^2 - l_p^{\ 2} = \left[\frac{3 \times 240}{2} - 116\right]^2 - 73.75^2 = 54{,}097 \text{ in}^2$$

$$v(punching) = \frac{r_u Area}{4 l_p d_{avg}} = \frac{13.15 \times 54{,}097}{4 \times 73.75 \times 10.75} = 224.3 psi < 253.0 \text{ psi}$$

Step 25. Check one-way diagonal shear d_e distance away from column drop panel and between positive yield lines.

Width in *L* direction = $\frac{3L}{2} - X = \frac{3 \times 240}{2} - 116 = 244$ in

$$\text{Area in L direction} = Width\left(H - X - \frac{l}{2} - d_v\right)$$

$$= 244\left(240 - 116 - \frac{63}{2} - 10.75\right) = 19{,}947 \text{ in}^2$$

$$v = \frac{r_u Area}{d_v Width} = \frac{13.15 \times 19{,}947}{10.75 \times 244} = 100 \text{ psi} < v_c^{\ 1/2} \quad \text{O.K.}$$

Note: Diagonal shear in *H* direction will be less than the one in *L* direction due to symmetry and larger d_e in *H* direction. Calculation is not required.

Step 26. Check one-way diagonal shear at an average *d* distance away from column capital and between positive yield lines.

(Width)*L* = 244 in (Step 25)

$$d_{avg} = d_v + \left(\frac{1}{width}\right) \times \text{drop panel width}$$

$$\mathrm{d_{avg}} = 10.25 + \frac{63}{244} \times 6 = 11.80 \text{ in}$$

$$\text{Area in L direction} = \text{Width}\left(\text{H - X - } \frac{\text{C}}{2} - d_{avg}\right)$$

$$= 244\left(240 - 116 - \frac{40}{2} - 11.80\right) = 22{,}496.8 \text{ in}^2$$

$$v = \frac{r_u Area}{d_{avg} Width} = \frac{13.15 \times 22{,}496.8}{11.80 \times 244} = 102.7 \text{ psi} < v_c \quad \text{O.K.}$$

Note: Diagonal shear in *H* direction will be less than the one in *L* direction due to symmetry and larger d_e in *H* direction. Calculation is not required.

Step 27. Calculate all remaining required moments similar to Step 18. Assume reinforcing bars for each, and determine actual provided unit moment capacities similar to Step 19.

PROBLEM 4A-3. LACED ELEMENTS DESIGNED FOR IMPULSE – LARGE DEFLECTIONS

Problem: **Design an element subjected to an impulse load for a large deflection.**

Procedure:

Step 1. Establish design parameters:

a. Impulse load and duration (Chapter 2).

b. Deflection criteria.

c. Geometry of element.

d. Support conditions.

e. Type of section available to resist blast, Type II or III depending upon the occurrence of spalling.

f. Materials to be used and corresponding static design strengths.

g. Dynamic increase factors (Table 4-1 (+)).

Step 2. Determine dynamic yield strength and dynamic ultimate strength of reinforcement.

Step 3. Determine dynamic design stress for the reinforcement according to the deflection range (support rotation) required by the desired protection level (Table 4-2 (+)).

Step 4. Determine optimum distribution of the reinforcement according to the deflection range considered (Section 4-33.4 and Figures 4-37 (+) and 4-38 (+)). Step not necessary for one-way elements.

Step 5. Establish design equation for deflection range considered and type of section (Type II or III) available.

Step 6. Determine impulse coefficient C_1 and/or C_u for optimum p_V/p_H ratio and L/H ratio.

Note: If the desired deflection X_m is not equal to X_1 or X_u, determine yield line location (Figures 3-4 (+) through 3-20 (+)) for optimum p_V/p_H ratio and L/H ratio and calculate X_m, X_1, and, if necessary, X_u (Table 3-5 (+) or 3-6 (+)).

Step 7. Substitute known parameters into equation of Step 5 to obtain relationship between p_H and d_c.

Step 8. Assume value of d_c and calculate p_H and from optimum p_V/p_H calculate p_V. Select bar sizes and spacings necessary to furnish required reinforcement (see Section for limitations).

Step 9. For actual distribution of flexural reinforcement, establish yield line location (Figures 3-4 (+) through 3-20 (+)).

Note:

$$\frac{L}{H}\left[\frac{M_{VN}+M_{VP}}{M_{HN}+M_{HP}}\right]^{1/2}=\frac{L}{H}\left[\frac{p_V}{P_H}\right]^{1/2}=\frac{L}{H}\left[\frac{A_{sV}}{A_{sH}}\right]^{1/2}$$

$$since:$$

$$M_N=M_P=pd_c^{\,2}f_{ds}=\frac{A_s}{b}d_cf_{ds}$$

Step 10. Determine the ultimate shear stress at distance d_c from the support in both the vertical (v_{uV} from Equation 4-119) and horizontal (v_{uH} from Equation 4-118) directions where the coefficients C_V and C_H are determined from Figures 4-39 (+) through 4-52 (+) (see Section 4-35.2 for an explanation of the figures and parameters involved).

Step 11. Determine the shear capacity v_c of the concrete in both the vertical and horizontal directions (use Equation 4-21).

Step 12. Select lacing method to be used (Figure 4-91 (+)). (Note: Lacing making an angle of 45° with longitudinal reinforcement is most efficient.)

Step 13. Determine the required lacing bar sizes for both the vertical and horizontal directions from Equation 4-26 where the parameters b_l and s_l are determined from the lacing method used (Figure 4-91 (+)), and the angle of inclination of the lacing bars α is obtained from Figure 4-15 (+). The lacing bar size d_b must be assumed in order to compute d_l and R_l.

(Note: See Section 4-18.3 for limitations imposed upon the design of the lacing).

Step 14. Determine required thickness T_c for assumed, d_c, selected flexural and lacing bar sizes, and required concrete cover. Adjust T_c to the nearest whole inch and calculate the actual d_c.

Step 15. Check flexural capacity based on either impulse or deflection. Generally, lacing bar sizes do not have to be checked since they are not usually affected by a small change in d_c.

a. Check of impulse. Compute actual impulse capacity of the element using the equation determined in Step 5 and compare with anticipated blast load, Repeat design (from Step 8 on) if capacity is less than required.

b. Check of deflection. Compute actual maximum deflection of the element using equation determined in Step 5 and compare with deflection permitted by design criteria. Repeat design (from Step 8 on) if actual deflection is greater than that permitted.

Step 16. Determine whether correct procedure has been used by first computing the response time of the element t_m (time to reach maximum deflection) from Equation 3-95 or 3-96, depending on the deflection range considered in the design, and then compare response time t_m with duration of load t_o. For elements to be designed for impulse, $t_m > 3\ t_o$.

Step 17. Determine the ultimate support shear in both the vertical (V_{sV} from Equation 4-122) and horizontal (V_{sH} from Equation 4-121) directions. The coefficients C_{sV} and C_{sH} are determined from Table 4-15 (+) and Figures 4-53 (+) through 4-56 (+) (see Section 4-35.3 for an explanation of the figures and parameters involved).

Step 18. Determine the required diagonal bar sizes for the vertical and horizontal (intersecting elements may control) directions from Equation 4-30. Diagonal bars should have the same spacing as the flexural reinforcement (Figure 4-95 (+)).

Note: To obtain the most economical design repeat the above steps for several wall thicknesses and compare costs. Percentages of reinforcement may be used to reduce the amount of calculations. In determining the required quantities of reinforcement, lapping of the bars should be considered.

EXAMPLE 4A-3. LACED ELEMENTS DESIGNED FOR IMPULSE – LARGE DEFLECTIONS

Required: **Design the back wall of the interior cell (Figure 4A-7 (+)) of a multicubicle structure for incipient failure.**

Figure 4A-7

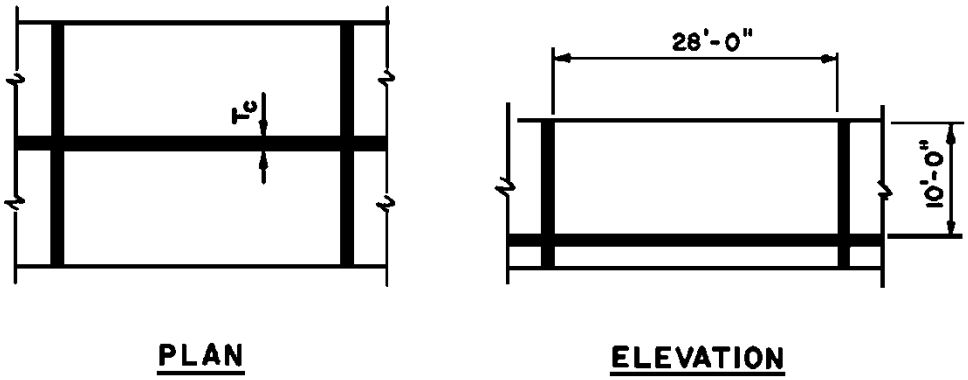

Solution:

Step 1. Given:

a. i_b = 3,200 psi-ms and t_o = 5 ms

b. Incipient failure

c. L = 336 in, H = 120 in

d. Fixed on three edges and one edge free

e. Type III cross section

f. Reinforcement f_y = 66,000 psi and f_u = 90,000 psi

concrete f'_c = 4,000 psi

g. For reinforcement DIF = 1.23 for dynamic yield stress

DIF = 1.05 for ultimate dynamic stress

Step 2. Dynamic Strength of Materials

$f_{dy} = DIF\ f_y = 1.23\ x\ 66{,}000 = 81{,}180$ psi

$f_{du} = DIF\ f_u = 1.05\ x\ 90{,}000 = 94{,}500$ psi

Step 3. Dynamic Design Stress, from Table 4-2 (+)

$$f_{ds} = \frac{f_{dy} + f_{du}}{2} = \frac{81{,}180 + 94{,}500}{2} = 87{,}840 \text{ psi}$$

Step 4. From Figure 4-38 (+) for $\frac{L}{H} = \frac{336}{120} = 2.8$ and 3 edges fixed,

Optimum: $p_V/p_H = 1.41$

Step 5. Since $X_m = X_u$ (incipient failure):

$$\frac{i_b{}^2 H}{p_H d_c{}^3 f_{ds}} = C_u \qquad \text{(Equation 4-103)}$$

Step 6. $L/H = 2.8$ is not plotted on Figure 4-34 (+), therefore must interpolate for optimum p_V/p_H.

For $p_V/p_H = 1.41$

L/H	C_u
1.5	613.0
2.0	544.0
3.0	444.0
4.0	387.0

From Figure 4A-8 (+), $C_u = 461.0$.

Step 7.

$$p_H d_c{}^3 = \frac{i_b{}^2 H}{C_u f_{ds}}$$
$$= \frac{(3{,}200)^2 (120)}{(461.0)(87{,}840)} = 30.3$$

Step 8. Assume $d_c = 21$ in:

$$p_H = \frac{30.3}{d_c{}^3} = \frac{30.3}{(21)^3} = 0.00327$$

$$p_V = \frac{p_V}{p_H} p_H = 1.41(0.00327) = 0.00461$$

$$A_{sH} = 0.00327(12)(21) = 0.82 \text{ in}^2\text{/ft} - \text{Use \#8 @11} (A_s = 0.86)$$

$$A_{sV} = 0.00461(12)(21) = 1.16 \text{ in}^2\text{/ft} - \text{Use \#9 @10} (A_s = 1.20)$$

Figure 4A-8
p_v/p_h=1.41

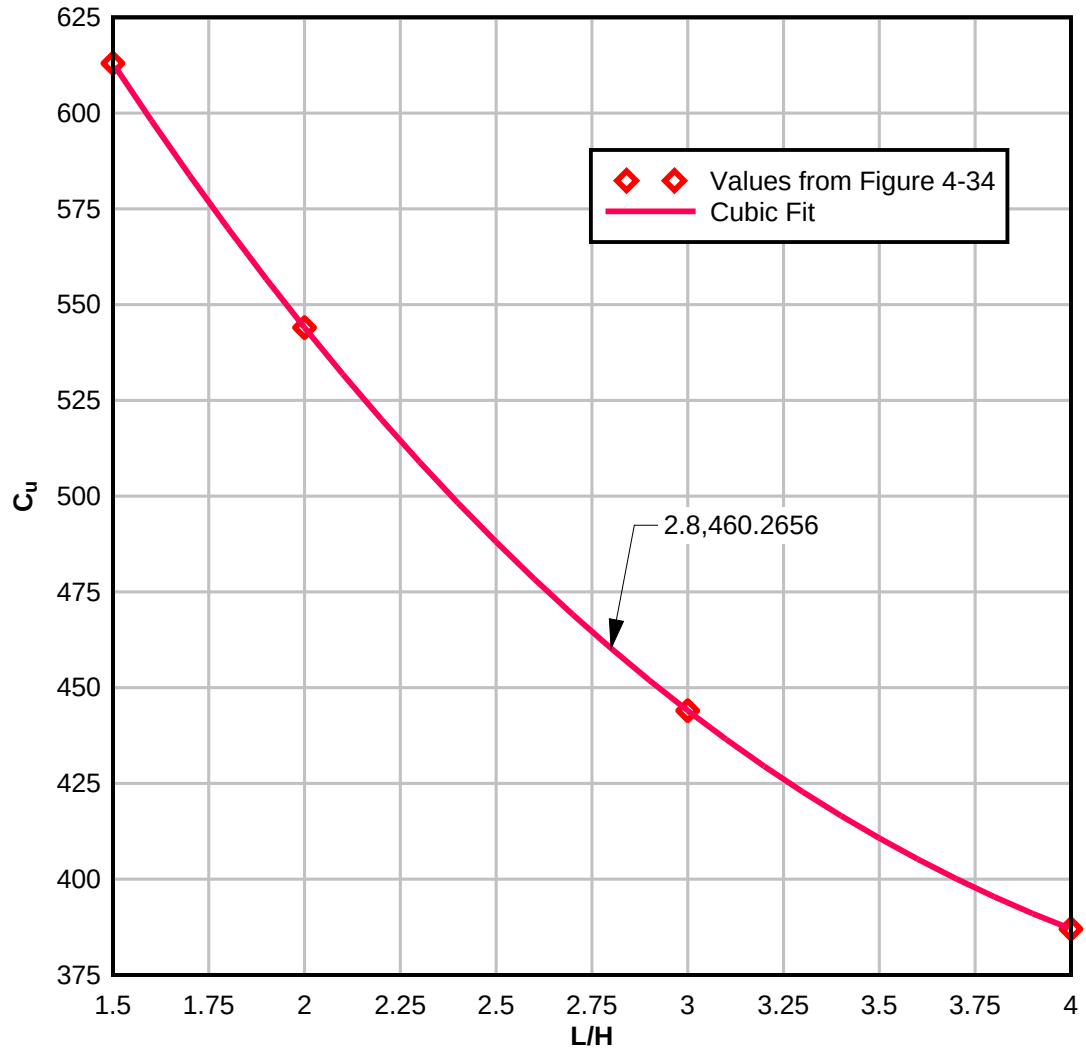

Step 9. Yield line location.

Actual:

$$\frac{p_V}{2p_H} = \frac{A_{sV}}{2A_{sH}} = \frac{1.20}{2 \times 0.86} = 0.698$$

From Figure 3-11 (+) for $\frac{L}{H}\left[\frac{A_{sV}}{A_{sH}}\right]^{1/2} = 2.8(0.698)^{1/2} = 2.34$

and M_{vp}/M_{vN2} = 1.00

x/L = 0.385, x = 0.385 (336) = 129 in

Figure 4A-9

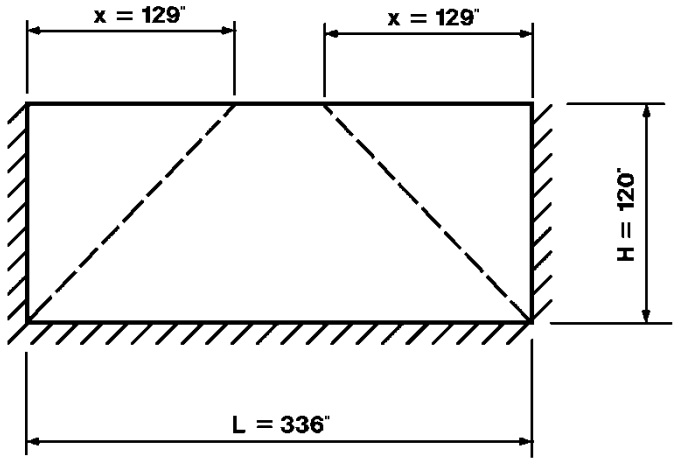

Step 10. Ultimate shear stress at distance d_c from support.

a. Vertical Direction (along L):

For:

$$\frac{d_c}{H} = \frac{21}{120} = 0.175 \text{ and } x/L = 0.385$$

From Figure 4-45 (+):

$$\left(\frac{d_c}{H}\right)_M = 0.49 \text{ and } C_M = 1.07$$

For:

$$\frac{d_c / H}{(d_c / H)_M} = \frac{0.175}{0.49} = 0.357$$

From Figure 4-46 (+):

$$\frac{C_V}{C_H} = 0.58$$

Therefore:

$C_V = 1.07(0.58) = 0.62$

$$p_V = \frac{A_{sV}}{bd_c} = \frac{1.20}{12(21)} = 0.00476$$

so that:

$v_{uV} = C_V\, p_V\, f_{ds}$ (Equation 4-119)

= 0.62 (0.00476) (87,840)

= 259 psi

b. Horizontal Direction (along *H*)

For:

$$\frac{d_c}{x} = \frac{21}{129} = 0.163$$

From Figure 4-40 (+):

C_H = 0.81

$$p_H = \frac{A_{sH}}{bd_c} = \frac{0.86}{12(21)} = 0.00341$$

so that:

$v_{uH} = C_H\, p_H\, f_{ds}$ (Equation 4-118)

= 0.81 (0.00341) (87,840)

= 243 psi

Step 11. Shear Capacity of Concrete (Equation 4-23)

a. Vertical Direction

$v_c = (1.9\,(f'_c)^{1/2} + 2{,}500\, p_V)$

$= [1.9\,(4{,}000)^{1/2} + 2{,}500\,(0.00476)]$

= 129 psi

b. Horizontal Direction

$v_c = (1.9\,(f'_c)^{1/2} + 2{,}500\, p_H)$

$= [1.9\,(4{,}000)^{1/2} + 2{,}500\,(0.00341)]$

= 132 psi

Step 12. Use lacing method No. 3 (see Figure 4-91 (+)).

Step 13. Lacing bar sizes:

a. Vertical Lacing Bars

b_l = 10 in s_l = 22 in

Assume No. 6 Bars,

d_b = 0.75 in

d_l = 21 + 1.13 + 2.00 + 0.75

= 24.88 in

Min $R_p = 4d_b$

For:

$$\frac{s_l}{d_l} = \frac{22}{24.88} = 0.884 \qquad \text{(Equation 4-28)}$$

$$\frac{2R_l + d_b}{d_l} = \frac{9d_b}{d_l} = \frac{9(0.75)}{24.88} = 0.271 \qquad \text{(Equation 4-29)}$$

Figure 4A-10

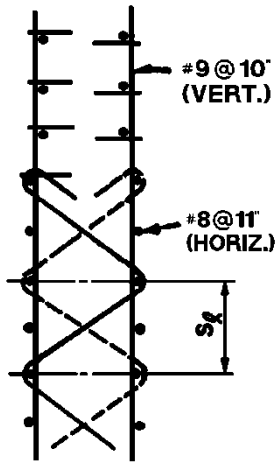

From Figure 4-15 (+):

α = 53.0°

For shear:

$$f_{dy} = 1.10 \times 66{,}000 = 72{,}600 \text{ psi}$$

$$f_{du} = 1.00 \times 90{,}000 = 90{,}000 \text{ psi}$$

$$f_{ds} = (72{,}600 + 90{,}000)/2 = 81{,}300 \text{ psi}$$

$$A_v = \frac{(v_{uV} - v_c) b_l s_l}{\phi f_{ds} (\sin\alpha + \cos\alpha)} \qquad \text{(eq. 4 - 26)}$$

$$= \frac{(259 - 132)(10)(22)}{0.85(81{,}300)(0.799 + 0.602)}$$

$$= 0.289 \text{ in}^2$$

$$Min A_v = 0.0015 b_l s_l$$

$$= 0.0015(10)(22)$$

$$= 0.330 \text{ in}^2$$

Use No. 6 bars:

(A = 0.44 in^2)

b. Horizontal Lacing:

Figure 4A-11

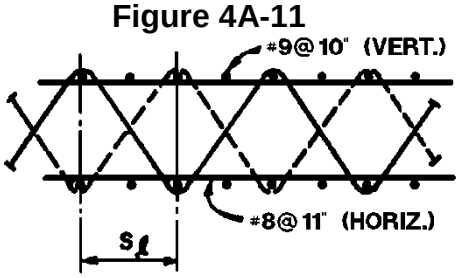

b_l = 11 in s_l = 20 in

Assume No. 6 Bars:

d_b = 0.75 in

d_l = 21.0 + 1.13 + 0.75 = 22.88 in

Min. $R_l = 4\ d_b$

For:

$$\frac{s_l}{d_l} = \frac{20}{22.88} = 0.874 \qquad \text{(Equation 4-28)}$$

$$\frac{2R_l + d_b}{d_l} = \frac{9d_b}{d_l} = \frac{9(0.75)}{22.88} = 0.295 \qquad \text{(Equation 4-29)}$$

From Figure 4-15 (+):

$\alpha = 53.5°$ (Equation 4-26)

$$A_H = \frac{(v_{uH} - v_c) b_l s_l}{\phi f_{ds} (\sin\alpha + \cos\alpha)}$$

$$= \frac{(243 - 129)(11)(20)}{0.85(81{,}300)(0.804 + 0.595)}$$

$$= 0.259 \text{ in}^2$$

$$Min.A_v = 0.0015\, b_l s_l$$

$$= 0.0015(11)(20)$$

$$= 0.330 \text{ in}^2$$

Use No. 6 bars:

(A = 0.44 in^2)

Step 14. Actual d_c depends upon vertical lacing.

Cover - 2 *x* 0.75 = 1.50

Lacing - 2 *x* 0.75 = 1.50

Horizontal - 2 *x* 1.00 = 2.00

Vertical - 1.13 = 1.13

6.13 in

$T_c = d_c + 6.13 = 21 + 6.13$

= 27.13 in; Therefore, use 27 in

Actual d_c = 27 - 6.13 = 20.87 in

Step 15. Check capacity.

a. Actual impulse capacity.

For:

$$\frac{p_V}{p_H} = 1.40 \approx 1.41,\ C_u = 461.0 \text{ psi-ms}^2/\text{in}^2$$ (Figure 4-34 (+))

For:

$$d_c = 20.87 \text{ in}, p_H = \frac{0.86}{12(20.87)} = 0.00343$$

$$i_b = \left(\frac{p_H d_c{}^3 f_{ds} C_u}{H}\right)^{0.5}$$

$$= \left(\frac{0.00343(20.87)^3(87{,}840)(461.0)}{(120)}\right)^{0.5}$$

$$i_b = 3244 \text{ psi} - \text{ms} > i_b = 3{,}200 \text{ psi} - \text{ms}$$

b. Actual maximum deflection.

For:

$$\frac{p_V}{p_H} = 1.40, C_u = 452.0$$ (Figure 4-31 (+))

Note: Interpolation for C_1 not shown.

C_u = 461.0

From Table 3-6 (+) for $x > H$:

$$X_1 = H \tan 12° = 120(0.2125) = 25.5 \text{ in}$$

$$X_u = x \tan \Theta_{max} + \left(\frac{L}{2} - x\right) \tan\left[\Theta_{max} - \tan^{-1} \frac{\tan \Theta_{max}}{x / H}\right]$$

$$= (129) \tan 12° + (168 - 129) \tan\left[12° - \tan^{-1} \frac{\tan 12°}{129 / 120}\right]$$

$$= 27.42 + 0.56 = 27.98 \text{ in}$$

From Step 5:

$$\frac{i_b{}^2 H}{p_H d_c{}^3 f_{ds}} = C_1 + (C_u - C_1)\left[\frac{X_m - X_1}{X_u - X_1}\right]$$

$$\frac{(3200)^2(120)}{0.00343(20.87)^3(87{,}840)} = 452.0 + (461.0 - 452.0)\left[\frac{X_m - 25.5}{27.98 - 25.5}\right]$$

From which: X_m = 24.58 in < X_1

Note: Since the deflection X_m is less than X_1, the above solution (X_m = 24.58) is incorrect because the equation used is for the deflection range $X_1 \leq X_m \leq X_u$. Therefore, an equation for the deflection range $0 \leq X_m \leq X_1$ must be used to obtain the correct solution.

From Section 4-33.5 for Type III cross sections and valid for deflection range:

$0 \leq X_m \leq X_1$

$$\frac{i_b^{\,2} H}{p_H d_c^{\,3} f_{ds}} = C_1 \left(\frac{X_m}{X_1} \right)$$

$$X_m = \frac{i_b^{\,2} H X_1}{p_H d_c^{\,3} f_{ds} C_1}$$

$$= \frac{(3200)^2 (120)(25.5)}{(0.00343)(20.87)^3 (87{,}840) 452.0}$$

$$= 25.3 \text{ in}$$

Note: The element is slightly over-designed. To obtain a more economical design, the amount of flexural reinforcement may be reduced.

Step 16. The response time of the element is obtained from:

$$t_m = \frac{i_b}{r_u} \qquad \text{(Equation 3-96)}$$

where:

$$r_u = \frac{5(M_{HN} + M_{HP})}{x^2} \qquad \text{(Table 3-2 (+))}$$

but:

$$M_{HN} = M_{HP} = \frac{A_{sH} f_{ds} d_c}{b}$$

$$= \frac{0.86(87{,}840)(20.87)}{12}$$

$$= 131{,}380 \text{ in} - \text{lbs/in}$$

therefore:

$$r_u = \frac{5(2)(131{,}380)}{(129)^2} = 78.9 \text{ psi}$$

so that:

$$t_m = \frac{i_b}{r_u} = \frac{3200}{78.9} = 40.6 \text{ ms}$$

$$\frac{t_m}{t_o} = \frac{40.6}{5} = 8.12$$

The correct procedure has been used since:

$$\frac{t_m}{t_o} > 3$$

Step 17. Ultimate support shear.

a. Vertical Direction (along *L*):

From Figure 4-54 (+), for:

$x/L = 0.385$

$C_{sV} = 4.40$

$$v_{sV} = \frac{C_{sV} p_V d_c^{\,2} f_{ds}}{H} \qquad \text{(eq. 4-122)}$$

$$= \frac{4.40(1.20)(20.87)^2(87{,}840)}{12(20.87)(120)}$$

$$= 6720 \text{ lbs/in}$$

b. Horizontal Direction (along *H*):

From Table 4-15 (+):

$$C_{sH} = \frac{6}{x/L} = \frac{6}{0.385} = 15.6$$

$$v_{sH} = \frac{C_{sH} p_H d_c^{\,2} f_{ds}}{L} \qquad \text{(eq. 4-121)}$$

$$= \frac{15.6(0.00343)(20.87)^2(87{,}840)}{336}$$

$$= 6{,}090 \text{ lbs/in}$$

Step 18. Diagonal bar sizes.

Note: Place bars on a 45° angle.

Therefore, $\sin\alpha = 0.707$

a. Vertical Direction (at floor slab):

$$A_d = \frac{V_{sV} b}{f_{ds} \sin\alpha} = \frac{6{,}720(10)}{81{,}300(0.707)} = 1.17 \text{ in}^2 \qquad \text{(Equation 4-30)}$$

Required area of bar:

$$\frac{A_d}{2} = 0.58 \text{ in}^2$$

Use No. 8 @ 10.

b. Horizontal Direction (at wall intersections):

$$A_d = \frac{V_{sH} b}{f_{ds} \sin \alpha} = \frac{6{,}090(11)}{81{,}300(0.707)} = 1.16 \text{ in}^2 \qquad \text{(Equation 4-30)}$$

Required area of bar:

$$\frac{A_d}{2} = 0.58 \text{ in}^2$$

Use No. 8 @ 11.

PROBLEM 4A-4. ELEMENTS DESIGNED FOR IMPULSE – LIMITED DEFLECTIONS

Problem: **Design an element which responds to the impulse loading of a close-in detonation.**

Procedure:

Step 1. Establish design parameters:

a. Blast loads including pressure-time relationship (Chapter 2).

b. Deflection criteria.

c. Structural configuration including geometry and support conditions.

d. Type of cross section available depending upon the occurrence of spalling and/or crushing of the concrete cover.

Step 2. Select cross section of element including thickness and concrete cover over the reinforcement. Also determine the static design stresses of concrete and reinforcing steel (Section 4-12).

Step 3. Determine dynamic increase factors for both concrete and reinforcement from Table 4-1 (+). Using the above *DIF's* and the static design stresses of Step 2, calculate the dynamic strength of materials.

Step 4. Determine the dynamic design stresses using Table 4-2 (+) and the results from Step 3.

Step 5. Assume vertical and horizontal reinforcement bars to yield the optimum steel ratio. The steel ratio is optimum when the resulting yield lines make an angle of 45 degrees with the supports.

Step 6. Calculate d_e (d or d_c depending upon the type of cross section available to resist the blast load) for both the positive and negative moments in both the vertical and horizontal directions. Determine the reinforcing ratios. Also check for the minimum steel ratios from Table 4-3 (+).

Step 7. Using the area of reinforcement and the value of d_e from Step 6, and the dynamic design stress of Step 4, calculate the moment capacity (Section 4-17) of both the positive and negative reinforcement. Also calculate the p_V/p_H ratio and compare to the optimum steel ratio from Step 5.

Step 8. Establish values of K_E, X_E and r_u similar to the procedures of Problem 4A-1, Steps 8 to 18.

Step 9. Determine the load-mass factor K_{LM}, for elastic, elasto-plastic and plastic ranges from Table 3-13 (+) and Figure 3-44 (+). The average load mass factor is obtained by taking the average K_{LM} for the elastic and elasto-plastic ranges and averaging this value with the K_{LM} of the plastic range.

In addition, calculate the unit mass of the element (account for reduced concrete thickness if spalling is anticipated) and multiply this unit mass by K_{LM} for the element to obtain the effective unit mass of the element.

Step 10. Using the effective mass of Step 9 and the equivalent stiffness of Step 8, calculate the natural period of vibration T_N from Equation 3-60.

Step 11. Determine the response chart parameters:

a. Peak pressure P (Step 1).

b. Peak resistance r_u (Step 8).

c. Duration of load T (Step 1).

d. Natural period of vibration T_N (Step 10).

Also calculate the ratios of peak pressure P to peak resistance r_u and duration T to period of vibration T_N. Using these ratios and the response charts of Chapter 3, determine the value of X_m/X_E. Compute the value of X_m.

Step 12. Determine the support rotation corresponding to the value of X_m from Step 11 using the equations of Table 3-6 (+). Compare this value to maximum permissible support rotation of Step 1, and if found to be satisfactory, proceed to Step 13. If comparison is unsatisfactory, repeat Steps 2 to 12.

Step 13. Using the ultimate resistance of Step 8, the values of d_e of Step 6 and the equations of Table 4-6 (+/+) or 4-7 (+/+) (Table 3-10 (+) or 3-11 (+) if shear at support is required), calculate the ultimate diagonal tension shear stress at a distance d_e from each support (or at each support). Also, calculate the shear capacity of the concrete from Equation 4-23. If the capacity of the concrete is greater than that produced by the load, minimum shear reinforcement must be used. However, if the shear produced by the load is greater than the capacity of the concrete, then shear reinforcement in excess of the minimum required must be provided. Also check for maximum spacing of shear reinforcement.

Step 14. Using the equations of Table 3-9 (+), 3-10 (+) or 3-11 (+) and the ultimate resistance of Step 8, calculate the shear at the supports. Determine the required area of diagonal bars using Equation 4-30. However, if section Type I is used, then the minimum diagonal bars must be provided.

EXAMPLE 4A-4. ELEMENTS DESIGNED FOR IMPULSE – LIMITED DEFLECTIONS

Required: **Design the side wall of cubicle with no roof or front wall and subject to the effects of a detonation of an explosive within the cubicle.**

Solution:

Step 1: Given:

a. Pressure-time loading (Figure 4A-12 (+)).

b. Maximum support rotation equal to 2 degrees.

c. L = 180 in, H = 144 in and fixed on two sides (Figure 4A-12).

d. Type III cross section.

Figure 4A-12

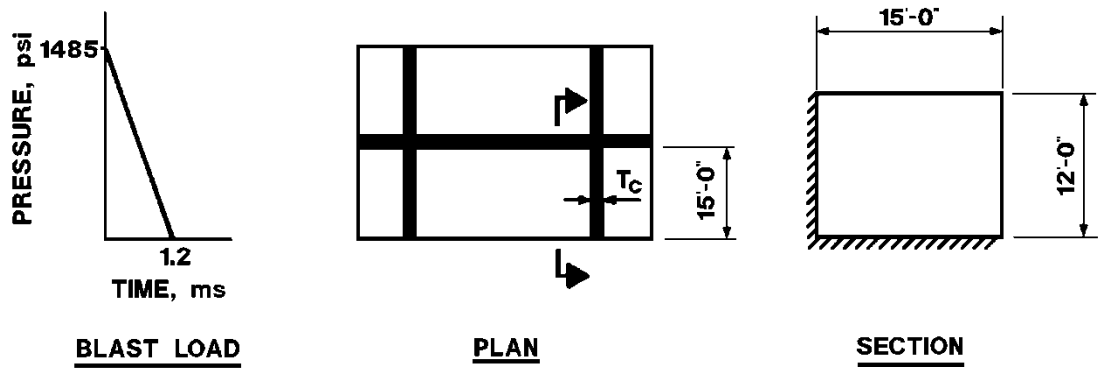

Step 2. Select element thickness and static stress of reinforcement and concrete (**Error! Reference source not found.** (+)).

Figure 4A-13

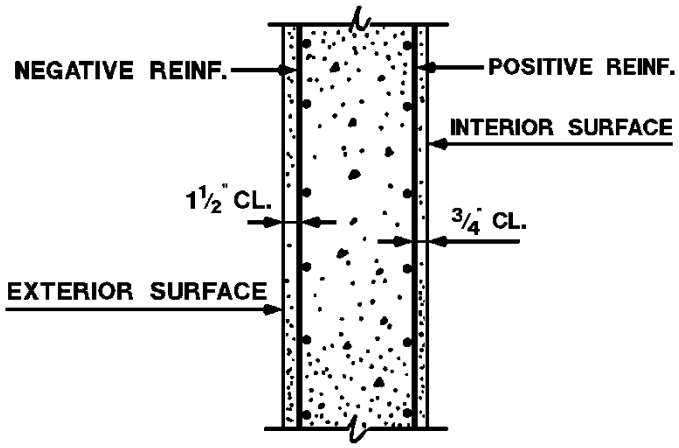

f'_c = 4,000 psi
f_y = 66,000 psi
Assume T_c = 22 in and concrete cover is as shown in **Error! Reference source not found.**.

Step 3. Determine dynamic stresses.

a. Dynamic increase factors, *DIF* (from Table 4-1 (+)).

Concrete:

Diagonal Tension - 1.00

Reinforcement:

Bending - 1.23

Diagonal Tension - 1.10

Direct Shear - 1.10

b. Dynamic strength of materials.

Concrete (f'_{dc}):

Diagonal Tension 1.00 (4,000) = 4,000 psi

Reinforcement (f_{dy}):

Bending 1.23 (66,000) = 81,180 psi

Diagonal Tension 1.10 (66,000) = 72,600 psi

Direct Shear 1.10 (66,000) = 72,600 psi

Step 4. Dynamic design stress from Table 4-2 (+).

Concrete (f'_{dc}):

Diagonal Tension - 4,000 psi

Reinforcement ($f_{ds} = f_{dy}$ for 0 < 2)

Bending - 81,180 psi

Diagonal Tension - 72,600 psi

Direct Shear - 72,600 psi

Step 5. Determine the optimum steel ratio p_V/p_H. Set $x = H$ to obtain 45 degree yield lines.

$$\frac{x}{L} = \frac{H}{L} = \frac{144}{180} = 0.80$$

From Figure 3-4 (+),

$$\frac{L}{H}\left(\frac{M_{VP}}{M_{HN} + M_{HP}}\right) = 1.08$$

Therefore,

$$\frac{M_{VP}}{M_{HN}+M_{HP}}=\left[\frac{1.08\times 144}{180}\right]^2=0.75$$

or

M_{VP}/M_{HN} = 1.50

Try No. 7 bars at 8 in o.c. in the vertical direction and No. 6 bars at 8 in o.c. in the horizontal direction.

Step 6. Calculate d_c and the steel ratios for each direction.

Assume No. 3 stirrups.

d_{cV} = 22 - (2 *x* 0.375) - 0.75 - 1.5 - (2 *x* 0.875/2) = 18.125 in

d_{cH} = 18.125 - (2 *x* 0.875/2) - (2 *x* 0.75/2) = 16.50 in

$$p_V=\frac{A_{sV}}{bd_{cV}}=\frac{0.60}{8\times 18.125}=0.0041>p_{min}=\frac{1.875\sqrt{f'_c}}{f_y}=\frac{1.875\sqrt{4{,}000}}{66{,}000}$$

= 0.0018, so O.K. (Table 4-3 (+))

$$p_H=\frac{A_{sH}}{bd_{cH}}=\frac{0.44}{8\times 16.50}=0.0033>0.0018\text{, so O.K.}$$

Step 7. Calculate the moment capacity of both the positive and negative reinforcement in both directions (Equation 4-19).

$$M_u=\frac{A_s f_{ds} d_c}{b}$$

$$M_{VN}=M_{VP}=\frac{0.60(81{,}180)(18.125)}{8}=110{,}354\text{ in}-\text{lbs/in}$$

$$M_{HN}=M_{HP}=\frac{0.44(81{,}180)(16.50)}{8}=73{,}671\text{ in}-\text{lbs/in}$$

$$M_{VN}/M_{HN}=110{,}354/73{,}671\approx 1.5=1.5\text{ from step 5 O.K.}$$

Step 8. Using the procedure in example 4A-1, Steps 8 through 18 and the moment capacities from Step 7. establish the values of K_E, X_E and r_u.

K_E = 36.7 psi/in

X_E = 0.968 in

r_u = 35.53 psi

Step 9. Calculate the effective mass of the element.

a. Load mass factors (Table 3-13 (+) and Figure 3-44 (+))

x/L = 0.80

elastic range K_{LM} = 0.65

elasto-plastic range:

one simple edge K_{LM} = 0.66

two simple edges K_{LM} = 0.66

plastic range K_{LM} = 0.54

K_{LM} (average elastic and elasto-plastic values)

$$= \frac{0.65 + 0.66 + 0.66}{3} = 0.66$$

K_{LM} (average elastic and plastic values)

$$= \frac{0.66 + 0.54}{2} = 0.60$$

b. Unit mass of element:

Using the larger d_c as the thickness of the element.

Due to spalling (Type III cross section) available thickness equals

$T_c = d_c$ = 18.125 in

$$m = \frac{w_c d_c}{g} = \frac{150(18.125)10^6}{32.2 \times 12 \times 1728} = 4{,}072 \text{ psi} - \text{ms}^2/\text{in}$$

c. Effective unit mass of element:

$m_e = K_{LM} m$ = 0.60 (4,072) = 2,443 psi-ms^2/in

Step 10. Calculate the natural period of vibration.

$T_N = 2\,\pi\,(m_e/K_E)^{1/2}$ (Equation 3-60)

$T_N = 2\,(3.14)\,(2443/36.7)^{1/2}$ = 51.2 ms

Step 11. Determine maximum response of element.

a. Response chart parameters:

Peak pressure, P = 1485 psi (Step 1)

Peak resistance, r_u = 35.53 psi (Step 8)

Duration of blast load, T = 1.2 ms (Step 1)

Period of vibration T_N = 51.2 ms (Step 10)

P/r_u = 1485/35.53 = 41.8

T/T_N = 1.2/51.2 = 0.023

b. From Figure 3-64a (+):

X_m/X_E = 5.0

X_m = 5.0 x 0.968 = 4.84 in

Step 12. Check support rotation (Table 3-6 (+)).

Since $x = H$ = 144 in and $0 < X_m < X_1$

$X_m = x \tan \Theta_H$

$\tan \Theta_H$ = 4.84/144

Θ_H = 1.93° < 2° assumed section is O.*K*.

Step 13. Check diagonal tension at supports (internal loading).

a. Calculate ultimate shear stresses at support by dividing the values of the support shear from Table 3-10 (+) by their respective d_c.

$V_{sH} = 3r_u x/5$ = 3 x 35.53 x 144/5 = 3,070 lb/in

$$V_{sV} = \frac{3r_u H\left(2 - \frac{x}{L}\right)}{6 - \frac{x}{L}} = \frac{3(35.53)(144)(2 - 0.80)}{6 - 0.80} = 3{,}542\, lb/in$$

$$v_{uH} = V_{sH} / d_{cH} = 3{,}070 / 16.50 = 186.1\, psi$$

$$v_{uV} = V_{sV} / d_{cV} = 3{,}542 / 18.125 = 195.4\, psi$$

b. Allowable shear stresses (Equation 4-23)

$v_c = 1.9\,(f'_c)^{1/2} + 2500\,p \leq 3.5\,(f'_c)^{1/2}$ = 221.4 psi

where p is the steel ratio at the support.

$v_{cH} = 1.9\,(4000)^{1/2} + 2500\,(0.0033)$ = 128.4 psi < 221.4 psi

$v_{cV} = 1.9\,(4000)^{1/2} + 2500\,(0.0041)$ = 130.4 psi < 221.4 psi

c. Required area of single leg stirrups.

$$A_V = \frac{(V_u - V_c)bs}{0.85f'_{ds}} \qquad \text{(Equation 4-26)}$$

v_{uH} - v_{cH} = 186.1 - 128.4 = 57.7 < 0.85 v_{cH} = 108.8 psi

Use 0.85 v_{cH} as minimum.

v_{uV} - v_{cV} = 195.4 - 130.4 = 65.0 < 0.85 v_{cV} = 110.8 psi

Use 0.85 v_{cV} as minimum.

Tie every reinforcing bar intersection, therefore,

$b = s = 8$ in < $d_c/2$ (maximum spacing) O.*K*.

$$A_{vH} = \frac{108.8 \times 8 \times 8}{0.85 \times 72{,}600} = 0.11\,\text{in}^2$$

$$\text{minimum } A_v = 0.0015\,bs = 0.10\,\text{in}^2 < 0.11\ O.K.$$

$$A_{vV} = \frac{110.8 \times 8 \times 8}{0.85 \times 72{,}600} = 0.11\ \text{in}^2$$

$$\text{minimum } A_v = 0.0015\,bs = 0.10\,\text{in}^2 < 0.11\ O.K.$$

The area of No. 3 bar is 0.11 in^2, so bar assumed in Step 6 is O.*K*.

Step 14. Determine required area of diagonal bars using the values of the shear at the support from Step 13.

$$A_d = \frac{V_s b}{f_{ds} \sin\alpha} \qquad \text{(Equation 4-30)}$$

Assume diagonal bars are inclined at 45 degrees.

$$A_{dH} = \frac{3{,}070 \times 8}{72{,}600 \times 0.707} = 0.48\,\text{in}^2 \text{ at 8 in o.c.}$$

$$\text{A}_{\text{dV}} = \frac{3{,}542 \times 8}{72{,}600 \times 0.707} = 0.55\,\text{in}^2 \text{ at 8 in o.c.}$$

Use No. 7 bars (A_b = 0.60 in^2) at 8 in o.c. at both supports

PROBLEM 4A-5. ELEMENTS DESIGNED FOR IMPULSE – COMPOSITE CONSTRUCTION

Problem: **Design a composite (concrete-sand-concrete) wall to resist a given blast output for incipient failure.**

Procedure:

Step 1. Establish design parameters.

a. Structure configuration.

b. Charge weight.

c. Blast impulse load (Chapter 2).

d. Thicknesses of concrete and sand portions of wall.

e. Blast impulse resisted by concrete panels.

f. Density of concrete and sand.

Step 2. Determine scaled thicknesses of concrete and sand using:

$$\overline{T}_c = T_c / W^{1/3} \text{ and } \overline{T}_s = T_s / W^{1/3}$$

Step 3. Determine scaled blast impulse resisted by each concrete panel using:

$$\bar{i}_{bd} = i_{bd} / W^{1/3} \quad \text{(donor panel)}$$

$$\bar{i}_{ba} = i_{ba} / W^{1/3} \quad \text{(acceptor panel)}$$

Step 4. Correct scaled blast impulse resisted by concrete (Step 3) to account for the increased mass produced by the sand and the reduction of the concrete mass produced by spalling and scabbing of the concrete panels using:

$$(\text{Corr.}) \quad \bar{i}_{bd} = \bar{i}_{bd} \left[\frac{\frac{T_c + d_c}{2} + \left(\frac{w_s}{w_c}\right)\left(\frac{T_s}{2}\right)}{d_c} \right]^{1/2}$$

$$(Corr.) \quad \bar{i}_{ba} = \bar{i}_{ba} \left[\frac{\frac{T_c + d_c}{2} + \left(\frac{w_s}{w_c}\right)\left(\frac{T_s}{2}\right)}{d_c} \right]^{1/2}$$

Step 5. Determine scaled blast impulse attenuated by acceptor panel and the sand $\bar{i}_a$ Figure 4-57 (+) or 4-58 (+), for w_s equal to 85 and 100 pcf., respectively.

Step 6. Calculate total impulse resisted by the wall using:

$$\bar{i}_{bt} = \bar{i}_a + \bar{i}_{bd}$$

Step 7. Compare blast impulse which is resisted by wall to that of the applied blast loads.

EXAMPLE 4A-5. ELEMENTS DESIGNED FOR IMPULSE – COMPOSITE CONSTRUCTION

Required: **Design the composite wall shown below for incipient failure conditions.**

Figure 4A-14

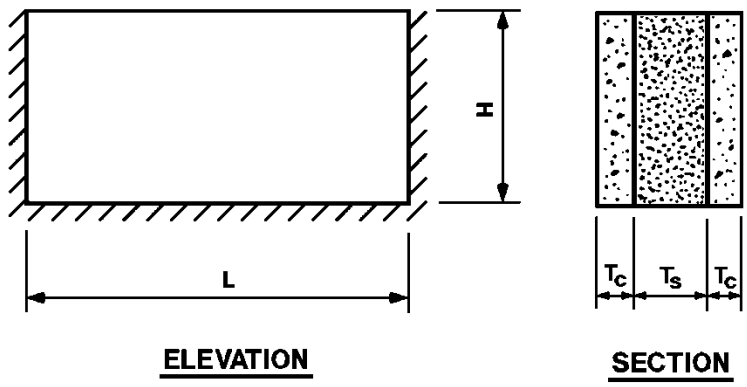

Step 1. Given:

a. Structural configuration as shown in Figure 4A-14 (+)

b. W = 1,000 lbs

c. i_b = 4,800 psi-ms (Chapter 2)

d. T_c = 1 ft, T_s = 2 ft, and d_c = 0.833 ft

e. $i_{bd} = i_{ba}$ = 1,500 psi-ms (Section 4-33)

f. w_c = 150 pcf and w_s = 100 pcf

Step 2. Scaled thicknesses of concrete and sand:

$$\overline{T}_c = T_c / W^{1/3} = 1/(1000)^{1/3} = 0.1 \text{ ft/lb}^{1/3} \qquad \text{(Equation 4-125)}$$

$$\overline{T}_s = T_s / W^{1/3} = 2/(1000)^{1/3} = 0.2 \text{ ft/lb}^{1/3} \qquad \text{(Equation 4-126)}$$

Step 3. Scaled blast impulse resisted by individual concrete panels.

$$\bar{i}_{bd} = \bar{i}_{ba} = \frac{1500}{(1000)^{1/3}} = 150 \text{ psi} - \text{ms/lb}^{1/3} \qquad \text{(Equation 4-127)}$$

Step 4. Correction of scaled impulse resisted by concrete panel used in composite walls.

$$(\text{Corr.})\bar{i}_{bd} = \bar{i}_{bd}\left[\frac{\frac{T_c + d_c}{2} + \left(\frac{w_s}{w_c}\right)\left(\frac{T_s}{2}\right)}{d_c}\right]^{1/2}$$

$$= 150\left[\frac{\frac{1.0 + 0.833}{2} + \frac{100}{150}\left(\frac{2}{2}\right)}{0.833}\right]^{1/2}$$

$$= 207 \text{ psi} - \text{ms/lb}^{1/3} = \bar{i}_{ba}(corr.)$$

Step 5. Scaled blast impulse attenuated by acceptor panel and sand.

$\bar{i}_a$ = 280 psi-ms/lb (Figure 4-58 (+))

Step 6. Total scaled blast impulse resisted by wall.

$$\bar{i}_{bt} = \bar{i}_a + \bar{i}_{bd} = 280 + 207 = 487 \text{ psi} - \text{ms/lb}^{1/3}$$

Step 7. Comparison of wall capacity and applied blast load.

$\bar{i}_{bt}$ = 487 ≈ $\bar{i}_b$ = 480 psi-ms/lb$^{1/3}$ O.*K*.

PROBLEM 4A-6. DESIGN OF A BEAM IN FLEXURE

Problem: **Design an interior beam of a roof subjected to an overhead blast load.**

Solution:

Step 1. Establish design parameters:

a. Structural configuration.

b. Pressure-time loading.

c. Maximum allowable support rotation.

d. Material properties

Step 2. From Table 4-1 (+), determine the dynamic increase factors, *DIF*. For the deflection criteria given in Step 1c, find the equation for the dynamic design stress from Table 4-2 (+). Using the *DIF* and the material properties from Step 1d, calculate the dynamic design stresses.

Step 3. Assuming reinforcing steel and concrete cover, calculate the distance from the extreme compression fiber to the centroid of the tension reinforcement, d.

Step 4. Calculate the reinforcement ratio of the steel assumed in Step 3. Check that this ratio is greater than the minimum reinforcement required by Equations 4-138 and 4-138a but less than the maximum reinforcement permitted by Equation 4-132.

Step 5. Using Equations 4-129 and 4-130, the dynamic design stresses from Step 2, and the value of d from Step 3. calculate the ultimate moment capacity of the beam.

Step 6. Compute the ultimate unit resistance of the beam using the moment capacity of Step 4 and an equation from Table 3-1 (+).

Step 7. Calculate the modulus of elasticity of concrete E_c and steel E_s (Equations 4-4 and 4-5, respectively) and the modular ratio n (Equation 4-6). Determine the average moment of inertia I_a of the beam according to Section 4-15.

Step 8. From Table 3-8 (+), find the correct equation for the equivalent elastic stiffness K_E. Evaluate this equation using the values of E_c and I_a from Step 7.

Step 9. With the ultimate resistance from Step 6 and the stiffness K_E from Step 8, use Equation 3-36 to calculate the equivalent elastic deflection X_E.

Step 10. Find the values for the load-mass factor K_{LM} in the elastic, elasto-plastic and plastic ranges from Table 3-12 (+). Average these values according to Section 3-17.4 to determine the value of K_{LM} to be used in design.

Step 11. Determine the natural period of vibration T_N using Equation 3-60, K_{LM} from Step 10, K_E from Step 8 and the mass of the beam. The mass includes 20 percent of the adjacent slabs.

Step 12. Calculate the non-dimensional parameters T/T_N and r_u/P. Using the appropriate response chart by Chapter 3 determine the ductility ratio, μ.

Step 13. Compute the maximum deflection X_m using the ductility ratio from Step 12 and X_E from Step 9. Calculate the support rotation corresponding to X_m using an equation from Table 3-5 (+). Compare this rotation with the maximum allowable rotation of Step 1c.

Step 14. Verify that the ultimate support shear V_s given in Table 3-9 (+) does not exceed the maximum shear permitted by Equation 4-142. If it does, the size of the beam must be increased and Steps 2 through 13 repeated.

Step 15. Calculate the diagonal tension stress v_u from Equation 4-139 and check that it does not exceed $10(f'_{dc})^{1/2}$.

Step 16. Using the dynamic concrete strength f'_{dc} from Step 2 and Equation 4-140, calculate the shear capacity of the unreinforced web, v_c.

Step 17. Design the shear reinforcement using Equation 4-140, and the excess shear stress (v_u - v_c) or the shear capacity of concrete v'_c whichever is greater.

Step 18. Check that the shear reinforcement meets the minimum area and maximum spacing requirements of Section 4-39.4.

Step 19. With T/T_N and X_m/X_E from Step 12, enter Figure 3-268 (+) and read the required resistance of the beam in rebound.

Step 20. Repeat Steps 3 through 6 to satisfy the required rebound resistance.

EXAMPLE 4A-6. DESIGN OF A BEAM IN FLEXURE

Required: **Design of an interior of a roof beam subjected to an overhead blast load.**

Solution:

Step 1. Given:

a. Structural configuration is shown in Figure 4A-15a (+).

b. Pressure-time loading is shown Figure 4A-15c (+).

c. Maximum support rotation of two degrees.

d. Yield stress of reinforcing steel, f_y = 66,000 psi

Concrete compressive strength, f'_c = 4,000 psi

Weight of concrete, w = 150 lbs/ft^3

Step 2.

a. Dynamic increase factors from Table 4-1 (+) for intermediate and low pressure range.

Reinforcing steel	- bending, *DIF*	= 1.17
	- direct shear, *DIF*	= 1.10
Concrete	- compression, *DIF*	= 1.19
	- direct shear, *DIF*	= 1.10
	- diagonal tension, *DIF*	= 1.00

b. From Table 4-2 (+), for $\Theta_m \leq 2°$:

$f_{ds} = f_{dy}$

c. Dynamic design stresses from Equation 4-3.

Reinforcing steel

- bending f_{dy} = 1.17 *x* 66,000

= 77,220 psi

- diagonal tension f_{dy} = 1.00 *x* 66,000

= 66,000 psi

Concrete

- compression $f'_{dc} = 1.19 \; x \; 4{,}000$

  $= 4{,}760$ psi

- direct shear $f'_{dc} = 1.10 \; x \; 4{,}000$

  $= 4{,}400$ psi

- diagonal tension $f_{dy} = 1.00 \; x \; 4{,}000$

  $= 4{,}000$ psi

Step 3. Assume 5 No. 6 bars for bending:

$A_s = 5 \; x \; 0.44 = 2.20 \text{ in}^2$

For concrete cover and beam sections see Figure 4A-15b (+).

Figure 4A-15

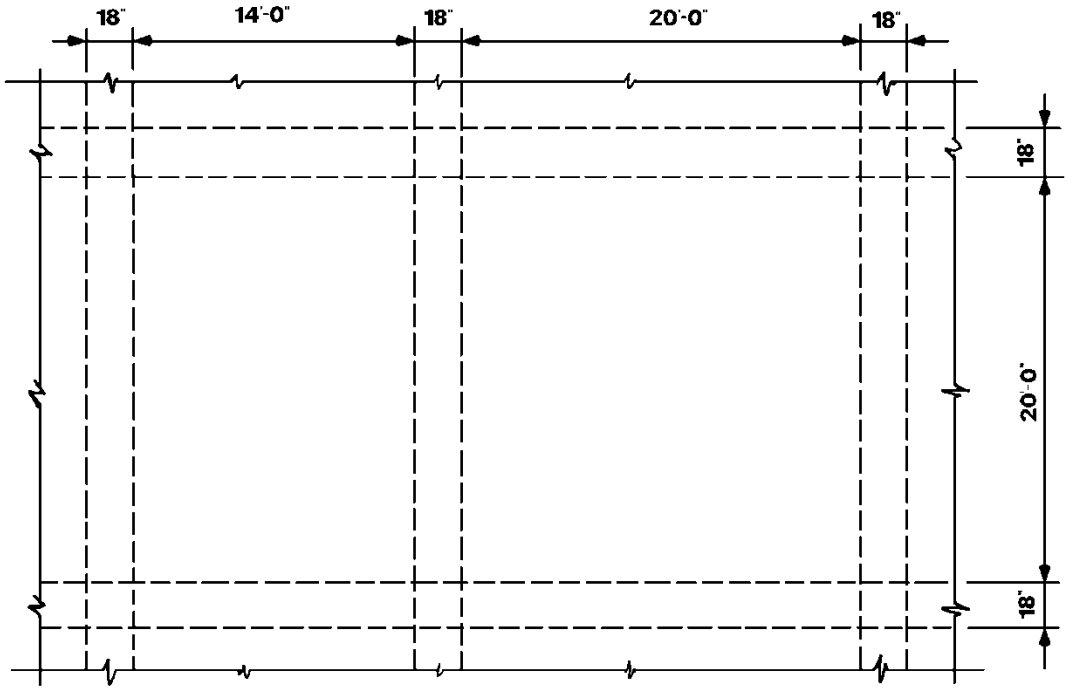

(a)

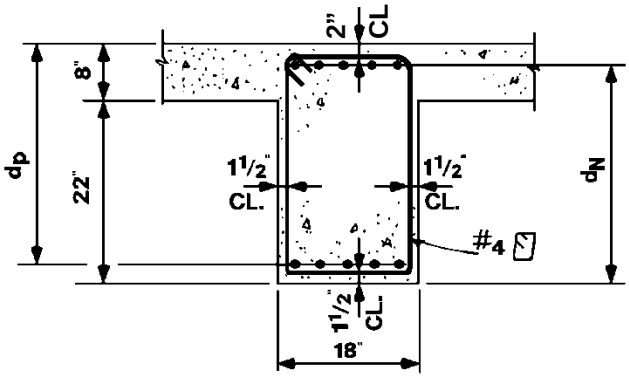

(b)

(c)

Step 4. Check reinforcement requirements:

a. Calculate *d* negative (support) and positive (mid-span) for checking bending reinforcement ratios.

$$d = h - d'(\text{cover}) - \phi'(tie) - \frac{\phi}{2}(\text{Bending Bar})$$

$$d_N = 30 - 2 - 0.5 - 0.75/2 = 27.125 \text{ in}$$

$$d_p = 30 - 1.5 - 0.5 - 0.75/2 = 27.625 \text{ in}$$

b. Calculate reinforcement ratio:

From Equation 4-131,

$p = A_s/bd$

$p_N = 2.2/(18 \; x \; 27.125) = 0.0045$

$p_p = 2.2/(18 \; x \; 27.615) = 0.0044$

c. Maximum reinforcement:

Maximum reinforcing ratio $p_{max} = 0.75 \; x \; p_b$

From Equation 4-132;

$$p_b = \left[\frac{0.85K_1 f'_{dc}}{f_{dy}}\right] \cdot \left[\frac{87{,}000}{87{,}000 + f_{dy}}\right]$$

where :

$$K_1 = 0.85 - \frac{0.05(f'_{dc} - 4{,}000)}{1{,}000} = 0.812$$

$$p_b = \frac{0.85 \times 0.812 \times 4760}{77{,}220}\left(\frac{87{,}000}{87{,}000 + 77{,}220}\right) = 0.0225$$

$$p_{max} = 0.75 \times 0.0225 = 0.0169 > p_N = 0.0045 \text{ and}$$

$$p_p = 0.0044 \quad \text{O.K.}$$

d. Check minimum reinforcing ratio against the larger value from equations 4-138 and 4-138a:

$$p_{min} = \frac{200}{f_y} = \frac{200}{66{,}000} = 0.0030 \qquad \text{(Equation 4-138)}$$

$$p_{min} = \frac{3\sqrt{f'_c}}{f_y} = \frac{3\sqrt{4{,}000}}{66{,}000} = 0.0029 \qquad \text{(Equation 4-138a)}$$

$$p_{min} = 0.0030 < p_N = 0.0045$$
$$< p_p = 0.0044 \quad \text{O.K.}$$

Step 5. Moment capacity of the beam using Equations 4-129 and 4-130 is:

$$M_u = A_s f_{dy} (d - a/2)$$

where:

$$a = \frac{A_s f_{dy}}{0.85 b f'_{dc}}$$

$$a = \frac{2.20 \times 77{,}220}{0.85 \times 18 \times 4{,}760} = 2.333 \text{ in}$$

at support:

$$M_N = 2.20 \; x \; 77{,}220 \; x \; (27.125 - 2.333/2)$$

$$= 4{,}409{,}934 \text{ in-lbs}$$

at mid-span:

$$M_p = 2.20 \; x \; 77{,}220 \; x \; (27.625 - 2.333/2)$$

$$= 4{,}494{,}876 \text{ in-lbs}$$

Step 6. From Table 3-1 (+), ultimate resistance of a uniformly loaded beam with fixed ends is:

$$r_u = \frac{8(M_N + M_p)}{L^2}$$

$$r_u = \frac{8(4{,}409{,}934 + 4{,}494{,}934)}{240^2} = 1{,}236.79 \text{ lbs/in}$$

Step 7. From Section 4-15, calculate average moment of inertia of the beam section.

a. Concrete modulus of elasticity: (Equation 4-4)

$$E_c = w^{1.5} \; x \; 33 \; x \; (f'_c)^{1/2}$$

$$E_c = 150^{1.5} \; x \; 33 \; x \; (4{,}000)^{1/2} = 3.8 \; x \; 10^6 \text{ psi}$$

b. Steel modulus of elasticity: (Equation 4-5)

$$E_s = 29 \; x \; 10^6 \text{ psi}$$

c. Modular ratio (Equation 4-6)

$$n = \frac{E_s}{E_c}$$

$$n = \frac{29 \times 10^6}{3.8 \times 10^6} = 7.6$$

d. From Figure 4-11 (+) and having n, p_N and p_p, the coefficients for moment of inertia of cracked sections are:

F_N = 0.0235 at support

F_p = 0.0230 at mid-span

Cracked moment of inertia from Equation 4-8b is:

$I_c = Fbd^3$

$I_{cN} = 0.0235 \; x \; 18 \; x \; 27.125^3 = 8{,}442 \text{ in}^4$

$I_{cp} = 0.0230 \; x \; 18 \; x \; 27.625^3 = 8{,}728 \text{ in}^4$

Average:

$I_c = (I_{cN} + I_{cp}) / 2$

$I_c = (8{,}442 + 8{,}728)/2 = 8{,}585 \text{ in}^4$

e. Gross moment of inertia (Equation 4-8)

$$I_g = \frac{bh^3}{12}$$

$$I_g = \frac{18 \times 30^3}{12} = 40{,}500 \text{ in}^4$$

f. Average moment of inertia of the beams from Equation 4-7:

$$I_a = \frac{I_g + I_c}{2}$$

$$= \frac{40{,}500 + 8{,}585}{2} = 24{,}542.5 \text{ in}^4$$

Step 8. From Table 3-8 (+), K_E of a uniformly loaded beam with fixed ends is:

$$K_E = \frac{307 E_c I_a}{L^4}$$

$$= \frac{307 \times 3.8 \times 10^6 \times 24{,}542.5}{240^4}$$

$$= 8{,}629.70 \text{ lbs/in/in}$$

Step 9. Equivalent elastic deflection from Equation 3-36 is:

$$X_E = \frac{r_u}{K_E} = \frac{1{,}236.79}{8{,}629.70} = 0.1433 \text{ in}$$

Step 10. Load-mass factor from Table 3-12 (+) for a plastic range of a uniformly loaded beam with fixed ends is:

K_{LM}	- elastic	= 0.77
	- elasto-plastic	= 0.78
	- plastic	= 0.66

K_{LM} for plastic mode deflections; from Section 3-17.4 from Chapter 3:

$$K_{LM} = \left[\left[\frac{0.77 + 0.78}{2}\right] + 0.66\right] / 2 = 0.72$$

Step 11. Natural period of the beam from Equation 3-60 is:

$$T_N = 2\pi\ (K_{LM}\ m/K_E)^{1/2}$$

Where m is the mass of the beam plus 20% of the slabs span perpendicular to the beam:

$$m = \frac{w}{g}$$

$$= (30 \times 18 + 2 \times 8 \times 102 \times 0.20) \times \frac{150}{12^3} \times \frac{1{,}000^2}{32.2 \times 12}$$

$$= 194{,}638.50 \text{ lbs} - \text{ms}^2/\text{in}^2$$

$$T_n = 2\pi\left[\frac{0.72 \times 194{,}638.50}{8{,}629.70}\right]^{1/2} = 25.3 \text{ ms}$$

Step 12. Find μ, ductility ratio from Figure 3-54 (+).

From Step 1:

$$T/T_N = 60.7/25.3 = 2.40$$

$$P = (18 + 84 + 120) \times 7.2$$

$$= 1{,}598.40 \text{ lbs/in}$$

$$r_u / P = \frac{1{,}236.79}{1{,}598.40} = 0.77$$

$$\mu = 9.0$$

Step 13. From Table 3-5 (+) support rotation is:

$$X_m = \frac{L \tan \Theta}{2}$$
$$= \mu \times X_E$$
$$= 9.0 \times 0.1433 = 1.29 \text{ in}$$
$$\tan \Theta = \frac{2 \times 1.29}{240} = 0.01075$$
$$\Theta = 0.620° < 2° \quad O.K.$$

Step 14. Direct Shear from Table 3-9 (+) is:

$$V_s = \frac{r_u L}{2}$$
$$= \frac{1236.79 \times 240}{2} = 148{,}415 \text{ lbs}$$

Section capacity in direct shear from Equation 4-142:

$$V_d = 0.18\, f'_{dc}\, bd$$

$$V_d = 0.18 \; x \; 4{,}400 \; x \; 18 \; x \; 27.125$$

$$= 386{,}694 \text{ lbs} > V_s = 148{,}415 \quad \text{O.}K.$$

Step 15. Diagonal tension stress from Equation 4-139:

$$v_u = \frac{V_u}{bd} \le 10(f'_c)^{1/2}$$

Total shear *d* distance from the face of support:

$$V_u = (L/2 - d) r_u$$
$$= \left(\frac{240}{2} - 27.125\right) 1236.79 = 114{,}867 \text{ lbs}$$
$$v_u = \frac{114{,}867}{18 \times 27.125} = 235.2 \text{ psi}$$
$$10(f'_{dc})^{1/2} = 10 \times (4{,}000)^{1/2}$$
$$= 632.5 psi > 235.2 \text{ psi O.K.}$$

Step 16. Unreinforced web shear capacity using Equation 4-140 is:

$$v_c = \left[1.9\left(f'_{dc}\right)^{1/2} + 2{,}500p\right]$$
$$< 3.5\left(f'_{dc}\right)^{1/2}$$
$$v_c = \left[1.9\left(4{,}000\right)^{1/2} + 2{,}500 \times 0.0045\right]$$
$$= 131.4 \text{ psi}$$
$$3.5\left(f'_{dc}\right)^{1/2} = 3.5 \times \left(4{,}000\right)^{1/2}$$
$$= 221.4 \text{ psi} > 131.4 \text{ psi} \quad \text{O.K.}$$

Step 17. Area of web reinforcing from Equation 4-141:

$A_v = [(v_u - v_c)\ x\ b\ x\ s_s]\ /\phi\ \ x\ f_{dy}; \quad v_u - v_c \geq v_c$

$v_u - v_c = 235.2 - 131.4 = 104 < v_c$ use v_c

Assume:

$s_s = 9$ in

$A_v = 131.4\ x\ 18\ x\ 9/(0.85\ x\ 66{,}000)$

$= 0.38$ in /9 in^2

Use No. 4 tie:

$A_v = 0.40$ in^2

Step 18. Minimum tie reinforcing area:

$$A_v(min) = 0.0015bs_s$$
$$= 0.0015 \times 18 \times 9$$
$$= 0.24in^2 < 0.40 \text{ in}^2 O.K.$$

Maximum tie spacing:

$$\left(f'_{dc}\right)^{1/2} = 4 \times \left(4{,}000\right)^{1/2}$$
$$= 253psi > \mathrm{v}_c = 131 \text{ psi}$$
$$> v_u - v_c = 104 \text{ psi}$$
$$s_{max} = d / 2$$
$$= 27.125 / 2 = 13.56 \text{ in} > 9 \text{ in} \quad \text{O.K.}$$

Step 19. Determine required resistance for rebound r^- from Figure 3-268 (+):

$$r^- / r_u = 0.50 \text{ for } T / T_N = 2.40 \text{ and } X_m / X_E = 9.0$$

Required:

$$r^{-} = 0.50 \times 1236.79 = 618.4 \text{ lbs/in}$$

Step 20. Repeat Steps 3 to 6:

Assume:

A^{-}_{s} = 1.64 in^2, 2 No. 7 + 1 No. 6

p^{-}_{N} at support= 0.0033 = 200/f_y

p^{-}_{p} at mid-span = 0.0034 > 200/f_y

M^{-}_{N} at support = 3,388,275 in-lbs

M^{-}_{p} at mid-span = 3,324,954 in-lbs

r^{-} = 932.4 lbs/in

> 618.4 lbs/in O.*K*.

PROBLEM 4A-7. DESIGN OF A BEAM SUBJECT TO TORSION

Problem: **Design a beam for a uniformly distributed torsional load.**

Procedure:

Step 1. Design the beam and adjacent slabs in flexure for the applied blast load.

Step 2. Calculate the unbalanced slab support shears, V_T using the ultimate resistance of the slabs from Step 1.

$$V_T = \frac{r_{u1}L_1}{2} + \frac{r_{u2}L_2}{2}$$

Using the unbalanced slab support shears, compute the torsional load at *d* distance from the face of the support from:

$$T_u = \left(\frac{L}{2} - d\right)\frac{b}{2}V_T$$

Step 3. Using the torsional load from Step 2, compute the nominal torsional stress in the vertical direction from Equation 4-143 and in the horizontal direction from Equation 4-144. Verify that the torsional stresses do not exceed the maximum stress permitted in Section 4-41.5.

Note: If the height of the beam is greater than width, the horizontal torsional stresses will not be critical and may be ignored.

Step 4. Determine the shear and torsional capacity of an unreinforced web, v_c and v_{tc}, from Equations 4-145 and 4-146 or 4-147, the torsional stress from Step 3 and the shear stress from Step 1.

Step 5. Find the excess shear stress (v_u - v_c) where the nominal shear stress v_u is from Step 1, and the shear capacity of the unreinforced web v_c is from Step 4. Using the excess shear stress and Equation 4-141, determine the area of web reinforcing for shear.

Step 6. With torsional capacity of the concrete from Step 4, the torsional stresses from Step 3, and Equations 4-148 and 4-149, calculate the area of web reinforcement for torsion in the vertical and, if required, in the horizontal directions.

Step 7. Add the area of shear reinforcement from Step 5 and the area of torsion reinforcement in the vertical direction, and compare with the area of torsion reinforcement required in the horizontal direction. The larger of the two values will control for the design of the closed ties. (If height of beam is greater than width, see note at Step 3.)

Step 8. Check minimum area and maximum spacing requirements of ties according to Section 4-41.5.

Step 9. Calculate the required area of longitudinal torsion reinforcement from Equations 4-151a and 4-151b, the torsional stress from Step 3 and the torsion capacity of concrete from Step 4.

Step 10. Determine the distribution of flexural and longitudinal steel at the supports and at the midsection.

EXAMPLE 4A-7. DESIGN OF BEAM IN TORSION

Required: **Design of beam in example 4A-6, for torsional load due to unequal spans of adjacent slab.**

Solution:

Step 1. Given:

a. Beam designed for flexure in example 4A-6 where:

L = 240 in

d = 27.125 in; b = 18 in

v_u = 235.2 psi

b. Slabs designed for flexure where:

r_{u1} = 15.0 psi L_1 = 14 ft = 168 in

r_{u2} = 7.85 psi L_2 = 20 ft = 240 in

Step 2. Calculate torsional load.

a. Unbalanced slab support shears:

$$V_T = \frac{r_{u1}L_1}{2} - \frac{r_{u2}L_2}{2}$$
$$= \frac{15 \times 168}{2} - \frac{7.85 \times 240}{2} = 320 \text{ lb/in}$$

b. Torsional load at d from the support:

$$T_u = \left(\frac{L}{2} - d\right)\frac{b}{2}V_T$$
$$= \left(\frac{240}{2} - 27.125\right) \times \frac{18}{2} \times 320 = 267{,}480 \text{ in} - \text{lb}$$

Step 3. Maximum torsional stress:

Since $h > b$, the torsional stress in the horizontal direction is not critical and will be ignored.

a. Torsional stress:

$$v_{(tu)V} = \frac{3T_u}{b^2 h}$$
$$= \frac{3 \times 267{,}480}{18^2 \times 30} = 82.5 \text{ psi}$$

b. Shear stress: v_u = 235.2 psi

c. Check maximum allowable torsional stress.

$$maxv_{tu} = \frac{12(f'_{dc})^{1/2}}{\left[1+\left[\frac{1.2v_u}{v_{tu}}\right]^2\right]^{1/2}}$$

$$= \frac{12 \times 4{,}000^{1/2}}{\left[1+\left[\frac{1.2 \times 235.2}{82.5}\right]^2\right]^{1/2}} = 212.9 > 82.5 \quad O.K.$$

Step 4. Find shear and torsional capacity of unreinforced web.

a. Shear capacity:

$$v_c = \frac{2(f'_{dc})^{1/2}}{\left[1+\left[\frac{v_{tu}}{1.2v_u}\right]^2\right]^{1/2}} \qquad \text{(Equation 4-145)}$$

$$v_c = \frac{2 \times 4{,}000^{1/2}}{\left[1+\left[\frac{82.5}{1.2 \times 235.2}\right]^2\right]^{1/2}} = 121.4 \text{ psi}$$

b. Torsional capacity:

$$v_{tc} = \frac{2.4(f'_{dc})^{1/2}}{\left[1+\left[\frac{1.2v_u}{v_{tu}}\right]^2\right]^{1/2}} \qquad \text{(Equation 4-146)}$$

$$v_{tc} = \frac{2.4 \times 4{,}000^{1/2}}{\left[1+\left[\frac{1.2 \times 235.2}{82.5}\right]^2\right]^{1/2}}$$

$$= 42.6 \text{ psi (Vertical face)}$$

Step 5. Area of web reinforcing for shear using Equation 4-141:

$$A_v = (v_u - v_c) \times b \times s / (\phi \times f_{dy})$$

Assume s = 12 in

$$A_v = (235.2 - 121.4) \times 18 \times 12 / (0.85 \times 66{,}000)$$
$$= 0.438 \text{ in}^2/ft$$

Step 6. Web reinforcing for torsional stress using Equation 4-148:

$$A_t = \frac{(v_{tu} - v_{tc}) b^2 hs}{3\phi\alpha_t b_t h_t f_{dy}} \quad \text{Vertical}$$

where :

$$\alpha_t = 0.66 + 0.33\frac{h_t}{b_t} \le 1.50$$

$$h_t = 30.0 - 2.0 - 1.5 - (2 \times 0.5 / 2) = 26 \text{ in}$$

See figure 4A - 15.

$$b_t = 18.0 - 1.5 - 1.5 - (2 \times 0.5 / 2) = 14.5 \text{ in}$$

See figure 4A - 15.

$$\alpha_t = 0.66 + 0.33\frac{26}{14.5} = 1.25 < 1.50 \quad \text{O.K.}$$

$$A_t = \frac{(82.5 - 42.6) \times 18^2 \times 30 \times 12}{3 \times 0.85 \times 1.25 \times 14.5 \times 26 \times 66{,}000}$$
$$= 0.059 \text{ in}^2/\text{ft}$$

Step 7. Total web reinforcement:

$$A_t + A_v / 2 = 0.059 + 0.438 / 2 = 0.278 \text{ in}^2/\text{ft/Leg}$$

Use No. 4 ties @ 8 in = 0.300 in^2/ft/Leg.

Step 8. Minimum torsion reinforcement (Section 4-41.5):

a. Minimum tie reinforcing area:

A_v (min) = A_v shear alone from example 4A-6

Use No. 4 ties @ 9 in

$$A_v(min) = \frac{0.38}{2} \times \frac{12}{9}$$
$$= 0.253 \text{ in}^2/\text{ft/Leg} < 0.300 \text{ in}^2/\text{ft/Leg} \quad \text{O.K.}$$

b. Maximum spacing:

$$s_{max} = \frac{h_t + b_t}{4}$$
$$= \frac{26 + 14.5}{4}$$
$$= 10.125 \text{ in} > 7 \text{ in} \qquad \text{O.K.}$$

Step 9. Required area of longitudinal steel is the greater of the two values from Equations 4-151a or 4-151b.

$$A_1 = 2A_t \times \frac{b_t + h_t}{s}$$
$$= 2 \times 0.06 \times \frac{14.5 + 26.0}{12} = 0.40 \text{ in}^2$$

or :

$$A_1 = \left[\frac{400 \times b \times s}{f_{dy}} \frac{v_{tu}}{v_{tu} + v_u} - 2A_t \right] \times \frac{b_t + h_t}{s}$$

where :

$$2A_t = \frac{50bs}{f_{dy}}$$
$$\frac{50bs}{f_{dy}} = \frac{50 \times 18 \times 12}{66{,}000} = 0.16 \text{ in}^2/\text{ft} = 2A_t$$
$$A_1 = \left[\frac{400 \times 18 \times 12}{66{,}000} \frac{82.5}{82.5 + 235.2} - 0.12 \right] \times \frac{14.5 + 26.0}{12}$$
$$= 0.74 \text{ in}^2$$

Step 10. Distribute A_l, A_s, and A_s^- as follows (see Figure 4A-16 (+)):

Distribute A_l equally between four corners of the beam and one on each face of depth, a total of six locations to satisfy maximum spacing of 12 inches.

$A_l/6 = 0.74/6 = 0.12 \text{ in}^2$

Vertical Face:

One (1) No. 4 bar

$= 0.20 \text{ in}^2 > 0.12$ O.*K*.

Horizontal Face at Top:

Support = 2.20 (bending) + 2 *x* 0.12 (torsion)

= 2.44 in^2

Two (2) No. 7 at corners + three (3) No. 6

= 2.52 in^2 O.*K*.

Midspan = 1.64 (rebound)

Two (2) No. 7 at corners + one (1) No. 6

= 1.64 in^2 O.*K*.

Horizontal Face at Bottom:

Support = Greater of rebound (1.64 in^2)
or torsion (2 *x* 0.12)

Two (2) No. 7 at corners + one (1) No. 6

= 1.64 in^2 O.*K*.

Midspan = 2.20 (bending)

Two (2) No. 7 at corners + one (1) No. 6 + two (2) No. 5

= 2.26 in^2 > 2.20 O.*K*.

Figure 4A-16

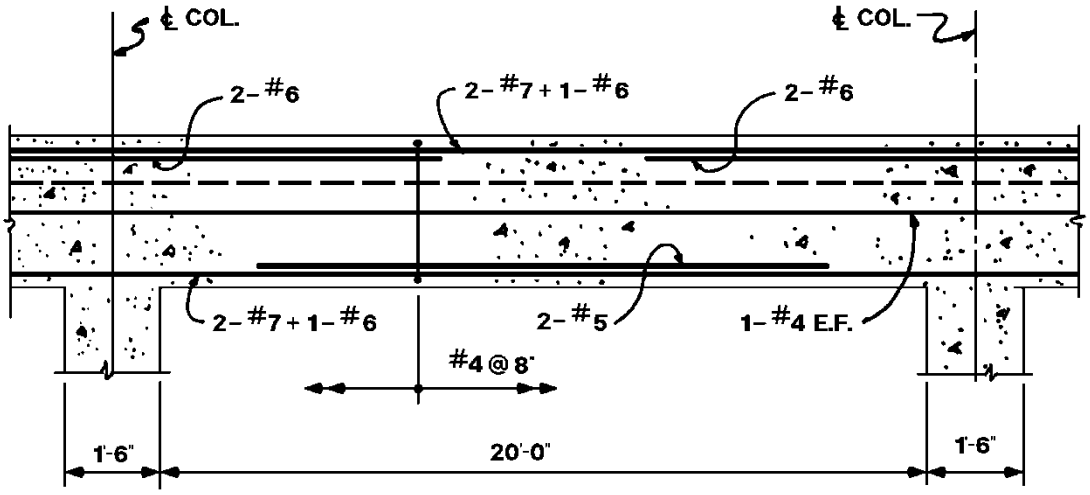

PROBLEM 4A-8. COLUMN DESIGN

Problem: **Design an interior column of a one-story structure with shear walls.**

Procedure:

Step 1. Establish design parameters:

a. End conditions of column.

b. Clear height of column.

c. Dynamic loads from roof.

d. Static material properties.

Step 2. Find equivalent static loads on the column by increasing the dynamic loads 20 percent (Section 4-47).

Step 3. From Table 4-1 (+), determine the dynamic increase factors, *DIF*. Using the *DIF*, the material properties from Step 1d and Equation 4-3, calculate the dynamic design strength of the concrete and the reinforcement.

Step 4. Assume a column section and reinforcing steel.

Step 5. Calculate the slenderness ratio of the column section assumed in Step 4, using either Equation 4-167 or 4-168. If the slenderness ratio is less than 22, slenderness effects may be neglected. If it is greater than 22 and less than 50, the moment magnifier must be calculated from Equation 4-170 and the moments increased according to Equation 4-169. The column section must be increased if the slenderness ratio is greater than 50.

Step 6. Divide the moment by the axial load to obtain the design eccentricity in both directions. Verify that the design eccentricities are greater than the minimum eccentricity of $0.1h$ for a tied column and $0.0707D$ for a spiral column.

Step 7. Compute the balanced eccentricity e_b of the column using Equation 4-156 or 4-158 (for a rectangular and circular column, respectively), the dynamic material properties from Step 3, and the section properties from Step 4. Compare the balanced eccentricity with the design eccentricity from Step 6. Determine if the column failure is controlled by compressive strength of the concrete ($e_b > e$) or tensile strength of reinforcement ($e_b < e$).

Step 8. Calculate the ultimate axial load capacity, at the actual eccentricity, in both directions. If compression controls use Equation 4-160 or 4-161. If tension controls use Equation 4-162 or 4-166.

Step 9. Using Equation 4-154, compute the pure axial load capacity of the section.

Step 10. Compute the ultimate capacity of the column section, using the load capacities at the actual eccentricities from Step 8, the pure axial load capacity from Step 9, and Equation 4-176. Verify that the ultimate load capacity is greater than the equivalent static load from Step 2.

Step 11. Provide ties according to Section 4-48.4 for a tied column, or Section 4-49.4 for a spiral reinforced column.

EXAMPLE 4A-8. COLUMN DESIGN

Required: **Design of a rectangular, tied interior column.**

Solution:

Step 1. Given:

a. Both ends of column fixed

b. Clear height of column, l = 120 in

c. Axial load, 491,000 lbs

Moment about x-axis, 2,946,000 in-lbs

No calculated moment about y-axis

d. Reinforcing steel, f_y = 66,000 psi

Concrete, f'_c = 4,000 psi

Step 2. Equivalent static loads.

a. Axial load

P = 491,000 x 1.2 = 589,200 lbs

b. Moment about x-axis

M_x = 2,946,000 x 1.2 = 3,535,200 in-lbs

c. Moment about y-axis

M_y = 0 in-lbs

Step 3. Dynamic material strengths:

a. Reinforcing Steel.

$f_{dy} = f_y \; x \; DIF$

f_{dy} = 66,000 x 1.10 = 72,600 psi

b. Concrete.

$f'_{dc} = f'_c \; x \; DIF$

f'_{dc} = 4,000 x 1.12 = 4,480 psi

Step 4. Use an 18" x 18" column section with 12 No. 7 reinforcing bars (see Figure 4A-17 (+)).

Figure 4A-17

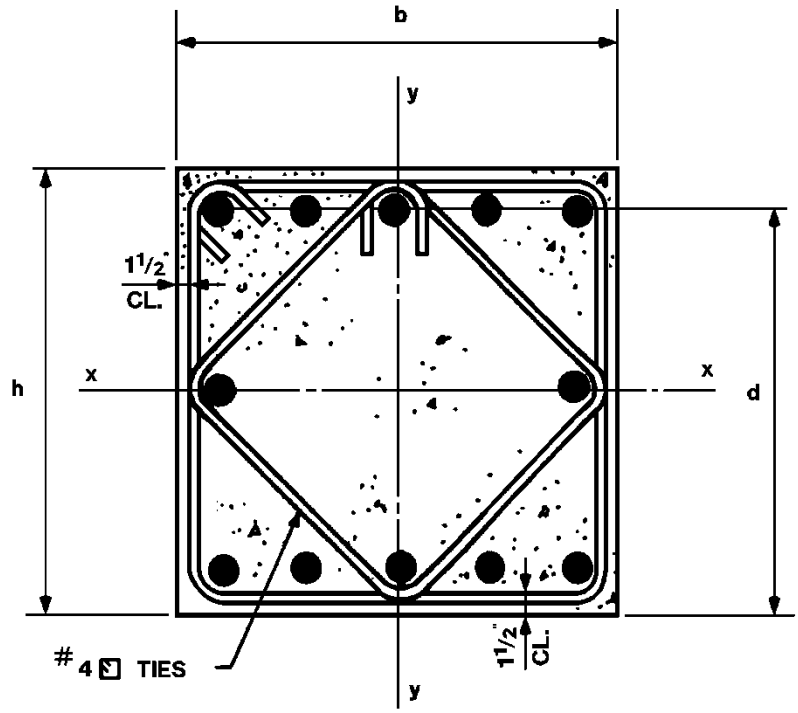

Step 5. Radius of gyration for rectangular section is equal to 0.3 of depth.

$r_x = r_y = 0.3\ x\ 18 = 5.4$ in

From Section 4-46:

$k = 0.9$

$$\frac{kl}{r} = \frac{0.9 \times 120}{5.4} = 20 < 22 \qquad \text{(Equation 4-168)}$$

Therefore slenderness effects may be neglected.

Step 6. Minimum eccentricity in both directions,

$e_{min} = 0.1\ x\ 18 = 1.8$ in

$e_x = M_x/P = 3{,}535{,}200/589{,}200 = 6$ in > 1.8 in O.*K*.

$e_y = M_y/P = 0/589{,}200 = 0 < 1.8$, use 1.8 in

Step 7. Balanced eccentricity:

a. From Figure 4A-17 (+),

$d_x = d_y = 18 - 1.5 - 0.5 - 0.875/2 = 15.56$ in

$A_{sx} = 5\ x\ 0.6 = 3.00\ \text{in}^2$

A_{sy} = 3 *x* 0.6 = 1.80 in^2

b. Find value of *m*,

$m = f_{dy}/(0.85\ f'_{dc})$ = 72,600/(0.85 *x* 4,480) = 19.06

c. Using Equation 4-156,

$e_b = 0.20\ h + 1.54\ A_s\ m/b$

e_{bx} = 0.20 *x* 18 + (1.54 *x* 3.00 *x* 19.06)/18

= 8.49 in > 6 in, compression controls

e_{by} = 0.20 *x* 18 + (1.54 *x* 1.80 *x* 19.06)/18

= 6.54 in > 1.8 in, compression controls

Step 8. Axial load from Equation 4-160:

$$P_u = \frac{A_s f_{dy}}{e/(2d-h)+0.5} + \frac{bhf'_{dc}}{3he/d^2+1.18}$$

a. When only eccentricity e_x is present:

$$P_x = \frac{3.0\times 72{,}600}{6/(2\times 15.56-18)+0.5} + \frac{18\times 18\times 4{,}480}{3\times 18\times 6/15.56^2+1.18} = 803{,}919 \text{ lbs}$$

b. When only eccentricity e_y is present:

$$P_y = \frac{1.8\times 72{,}600}{1.8/(2\times 15.56-18)+0.5} + \frac{18\times 18\times 4{,}480}{3\times 18\times 1.8/15.56^2+1.18} = 957{,}137 \text{ lbs}$$

Step 9. Compute pure axial load capacity from Equation 4-154.

$P_o = 0.85\ f'_{dc}\ (A_g - A_{st}) + A_{st}\ f_{dy}$

A_g = 18 *x* 18 = 324 in^2

A_{st} = 12 *x* 0.6 = 7.2 in^2

P_o = 0.85 *x* 4480 (324 - 7.2) + 7.2 *x* 72,600

= 1,729,094 lbs

Step 10. Ultimate capacity of the column from Equation 4-176:

$$\frac{1}{P_u} = \frac{1}{P_x} + \frac{1}{P_y} - \frac{1}{P_o}$$

$$= \frac{1}{758{,}417} + \frac{1}{1{,}054{,}557} - \frac{1}{1{,}729{,}094} = \frac{1}{592{,}254} 1/\text{lbs}$$

$$P_u = 592{,}254 \text{ lbs} > 589{,}200 \quad O.K.$$

Step 11. Provide ties, according to Section 4-48.4.

For #7 longitudinal bars, use #3 ties.

$s \leq 16\phi$ (longitudinal bars) = 16 *x* 0.875 = 14 in

and:

$s \leq 48\phi$ (ties) = 48 *x* 0.375 = 18 in

and:

$s \leq h/2$ = 9 in

Use two (2) #3 ties at 9 inches arranged as shown in Figure 4A-17 (+).

PROBLEM 4A-9. BRITTLE MODE, POST-FAILURE FRAGMENTS

Problem: **Design an element, which responds to blast impulse, for controlled post-failure fragments.**

Procedure:

Step 1. Establish design parameters:

a. Impulse load and duration (Chapter 2).

b. Maximum average velocity of post-failure fragments v_f as required by receiver sensitivity.

c. Geometry of element.

d. Support conditions.

e. Materials to be used and corresponding static design strengths.

f. Dynamic increase factors (Table 4-1 (+)).

Step 2. Determine dynamic yield strength and ultimate strength of reinforcement from Equation 4-3.

Step 3. Determine the dynamic design stress for the flexural reinforcement according to the deflection range (support rotation) from Table 4-2 (+).

Step 4. Substitute known quantities of i_b (Step 1a), f_{ds} (Step 3), H (Step 1c), and v_f (Step 1b) into Equation 4-194.

Step 5. Obtain optimum ratio of vertical to horizontal reinforcement p_V/p_H for a given wall thickness T_c:

a. Assume a value of d_c and substitute it into the equation obtained in Step 4.

b. Read optimum: p_V/p_H ratio from Figure 4-38 (+).

Note: For one-way elements, the ratio of the main to secondary reinforcement is always 4 to 1 unless minimum conditions govern (Table 4-3 (+)). Obtain C_u from Table 4-11 (+) for the given support condition. C_f is always equal to 22,500 (Section 4-58)

Step 6. For the optimum p_V/p_H ratio, determine C_u (from Figure 4-33 (+), 4-34 (+) or 4-35 (+)) and C_f (from Figure 4-73 (+), 4-74 (+) or 4-75 (+)). Calculate p_V and p_H. Select bar sizes and spacings necessary to furnish the required reinforcement ratios.

Step 7. Determine the required lacing and diagonal bars. (Procedure is exactly the same as that for elements designed for the ductile mode for incipient failure or less. See Problem 4A-3.)

Step 8. Determine the required T_c for the assumed d_c selected flexural and lacing bar sizes and required concrete cover. Adjust T_c to the nearest whole inch and calculate the actual d_c.

Step 9. Check flexural capacity of the element based on either blast impulse of post-failure fragment velocity. Generally, lacing bar sizes do not have to be checked since they are not usually affected by a small change in d_c.

a. Compute the actual impulse capacity of the element using Equation 4-194 and compare with the anticipated blast load. Repeat design (from Step 5 on) if the capacity is less than that required.

b. Compute the actual post-failure fragment velocity using Equation 4-194 and compare with the value permitted by the acceptor sensitivity. Repeat design (from Step 5 on) if the actual velocity is greater than that permitted.

Step 10. Determine whether the correct design procedure has been utilized by first computing the response time of the element t_u (time to reach ultimate deflection) from Equation 4-192 or 4-193. Then compare the response time t_u with the duration of the blast load t_o. For elements that respond to impulse loading $t_u/t_o > 3$.

Note: To obtain the most economical design, repeat Steps 5 through 10 for several wall thicknesses and compare their costs. Percentages of reinforcement can be used to reduce the amount of calculations. In determining the required quantities of reinforcement, the length of the lap splice should be considered.

EXAMPLE 4A-9. BRITTLE MODE, POST-FAILURE FRAGMENTS

Required: **Design the back wall of an interior cell (Figure 4A-18 (+)) of a multicubicle structure for controlled post-failure fragments.**

Solution:

Step 1. Given:

a. i_b = 4800 psi-ms, and t_o = 1.0 ms

b. v_f = 100 fps = 1.2 in/ms

c. L = 360 in, H = 120 in

d. Fixed on three edges and one edge free

e. Reinforcing bars; f_y = 66,000 psi and f_u = 90,000 psi

Concrete, f'_c = 4,000 psi

f. For reinforcement, DIF = 1.23 for yield stress

DIF = 1.05 for ultimate stress

Figure 4A-18

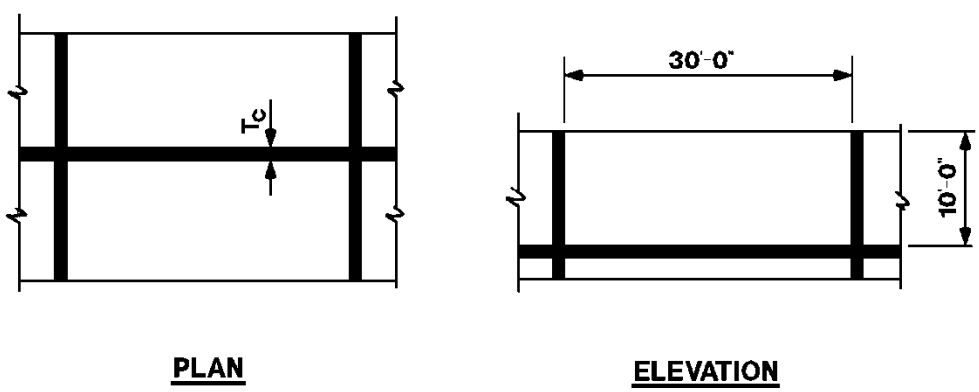

Step 2. Dynamic strength of materials.

$f_{dy} = DIF\ f_y = 1.23\ x\ 66{,}000 = 81{,}180$ psi

$f_{du} = DIF\ f_u = 1.05\ x\ 90{,}000 = 94{,}500$ psi

Step 3. Dynamic design stress from Table 4-2 (+).

$$f_{ds} = \frac{f_{dy} + f_{du}}{2} = \frac{81{,}180 + 94{,}500}{2} = 87{,}840 \text{ psi}$$

Step 4. Substitute known quantities into Equation 4-194.

$$i_b^{\,2} = C_u\left[\frac{p_H d_c^{\,3} f_{ds}}{H}\right] + C_f d_c^{\,2} v_f^{\,2}$$

$$4800^2 = \frac{C_u p_H d_c^{\,3} \times 87{,}840}{120} + C_f d_c^{\,2} \times 1.2^2$$

$$23.04 \times 10^6 = 732 C_u p_H d_c^{\,3} + 1.44 C_f d_c^{\,2}$$

Step 5. Optimum reinforcement ratio.

a. Assume d_c = 21 in and substitute into Equation 4-194.

$23.04\ x\ 10^6 = 732\ C_u\ p_H\ (21)^3 + 1.44\ C_f\ (21)^2$

Therefore:

$$p_H = \frac{23.04 \times 10^6 - 635 \times C_f}{6.78 \times 10^6 \times C_u}$$

b. Read optimum p_V/p_H value from Figure 4-38 (+) for L/H = 3.

$p_V/p_H = 1.58$

Step 6. For optimum p_V/p_H = 1.58

From Figure 4-34 (+), C_u = 477

From Figure 4-74 (+), $C_f = 1.84x\ 10^4$

$$p_H = \frac{23.04 \times 10^6 - 635 \times 1.84 \times 10^4}{6.78 \times 10^6 \times 477} = 0.00351$$

$$p_V = 1.58\, p_H = 1.58 \times 0.00351 = 0.00555$$

$$A_{sH} = 0.00555 \times 12 \times 21 = 1.398 \text{ in}^2/\text{ft}$$

$$\text{use \#8 @ 6 in. } (A_s = 1.58 \text{ in}^2)$$

$$A_{sV} = 0.00877 \times 12 \times 21 = 2.21 \text{ in}^2/\text{ft}$$

$$\text{use \#10 @ 6 in. } (A_s = 2.54 \text{ in}^2)$$

$$\text{Actual } \frac{p_V}{p_H} = \frac{A_{sV}}{A_{sH}} = \frac{2.54}{1.58} = 1.610$$

Step 7. Using lacing method No. 3, No. 7 vertical lacing bars are required. (Calculations are not shown since they are similar to those presented in

example 4A-3 for incipient failure design. Also, the remainder of the design for shear will not be shown.)

Step 8. The actual d_c depends upon the details of the base of the wall (region of vertical lacing).

Figure 4A-19

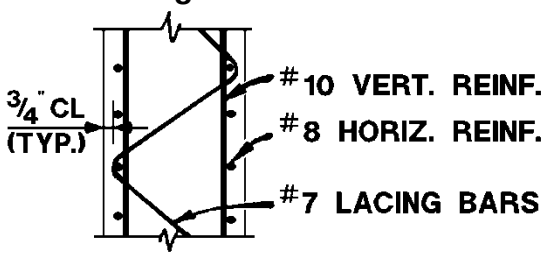

cover	= 2 *x* 0.75	= 1.50
lacing	= 2 *x* 0.875	= 1.75
horizontal	= 2 *x* 1.00	= 2.00
bars	= 1.27	= 1.27
vertical bars		6.52 in

$T_c = d_c + 6.52 = 27.52$ in, use 28 in

actual $d_c = 28 - 6.52 = 21.48$ in

Step 9. Actual capacity of element

a. Actual impulse capacity

For $p_V/p_H = 1.610$, $C_u = 481$

and $C_f = 1.855 \times 10^4$

$d_c = 21.48$ in

$$p_H = 1.05/(12 \times 21.48) = 0.00407$$

$$i_c^{\,2} = C_u \left[\frac{p_H d_c^{\,3} f_{ds}}{H} \right] + C_f d_c^{\,2} v_f^{\,2}$$

$$= 481 \left[\frac{0.00407 \times 21.48^3 \times 87{,}840}{120} \right] + 1.855 \times 10^4 \times 21.48^2 \times 1.2^2$$

$$= 26.752 \times 10^6$$

$$i_c = 5150 \text{ psi} - \text{ms} > i_b = 4{,}800 \text{ psi} - \text{ms} \qquad \text{O.K.}$$

b. Actual post-failure fragment velocity.

$$i_b^{\ 2} = C_u \left[\frac{p_H d_c^{\ 3} f_{ds}}{H} \right] + C_f d_c^{\ 2} v_f^{\ 2}$$

$$4{,}800^2 = 481 \times \frac{0.00407 \times 21.48^3 \times 87{,}840}{120} + 1.855 \times 10^4 \times 21.48^2 \times v_f^{\ 2}$$

$$v_f = 1.10 \text{ in/ms} = 92 \text{ fps} < 100 \text{ fps} \quad \text{O.K.}$$

Step 10. Response time of element t_u:

$M_{VN2} = M_{VP}$ and $M_{HN1} = M_{HN1} = M_{HN3} = M_{HP}$

$$M_{HP} = A_{sH} f_{ds} (d_c / b) = \frac{1.05 \times 87{,}840 \times 21.48}{12}$$

$$= 165{,}095 \text{ in} - \text{lbs/in}$$

$$M_{VP} = A_{sV} f_{ds} d_c / b = \frac{1.69 \times 87{,}840 \times 21.48}{12}$$

$$= 265{,}725 \text{ in} - \text{lbs/in}$$

$$x_2 / x_1 = 1.0 \text{ (symmetrical yield lines)}$$

$$\frac{\text{L}}{\text{H}} \left[\frac{M_{VP}}{M_{HN1} + M_{HP}} \right]^{1/2} = \frac{360}{120} \left[\frac{26{,}725}{2 \times 165{,}095} \right]^{1/2} = 2.69$$

$$\frac{M_{VP}}{M_{VN2}} = \frac{265{,}725}{265{,}725} = 1.0$$

From Figure 3-11 (+),

$x_1/L = 0.358$

$x_1 = x_2 = 0.358\ (360) = 128.88$

$$r_u = \frac{5(M_{HN1} + M_{HP})}{x_1^{\ 2}} \quad for\ x_1 < L/2$$ (Table 3-2 (+))

$$r_u = \frac{5(2 \times 165{,}095)}{120^2} = 99.4\, psi$$

$m = 225\ d_c = 225\ (21.48) = 4833$ psi-ms^2/in

$(K_{LM})_u = 0.557$ (Figure 3-44 (+))

$m_u = 0.557\ (4833) = 2692$ psi-ms^2/in

$x_1 = 128.88 > H = 120$

Therefore, vertical supports fail first and the post-ultimate range resistance is:

$$r_{up} = \frac{8(M_{HN1} + M_{HP})}{L^2} = \frac{8(2 \times 165{,}095)}{360^2} = 20.4 \text{ psi}$$

m_{up} = 0.66 *x* 4833 = 3,190 psi-ms^2/in

X_1 = $H \tan \Theta_{max}$ = 12 *x* tan 12° = 25.51 in (Table 3-6 (+))

Use Equation 4-192 for t_u.

$$t_u = \frac{i_b}{m_u} + \left[\frac{m_{up}}{m_u r_{up}} - \frac{1}{r_u}\right]\left[i_b{}^2 - 2m_u r_u X_1\right]^{1/2} - \left[\frac{m_u}{r_{up}}\right]V_f$$

$$t_u = \frac{4{,}800}{2{,}692} + \left[\frac{3190}{2692 \times 20.4} - \frac{1}{99.4}\right]\left[4800^2 - 2 \times 2692 \times 99.4 \times 25.51\right]^{1/2}$$

$$- \left(\frac{2692}{20.4}\right)1.1 = 3.78 \text{ ms}$$

$$\frac{t_u}{t_o} = \frac{3.78}{1.0} = 3.78 > 3, \text{ Therefore, correct procedure has been used}$$

PROBLEM 4A-10. MAXIMUM FRAGMENT PENETRATION

Problem: **Determine the maximum penetration of a primary metal fragment into a concrete wall and determine if perforation occurs.**

Procedure:

Step 1. Establish design parameters:

a. Type of fragment

b. Weight W_f and diameter d of fragment

c. Fragment striking velocity v_s

d. Thickness T_c and the ultimate compressive strength f'_c of concrete wall

Step 2. Determine the maximum penetration X_f from Figure 4-78 (+) (or Equation 4-200 or 4-201) for the values of W_f and v_s in Step 1. X_f is the maximum penetration of an armor-piercing steel fragment into 4,000 psi concrete.

Step 3. To determine the depth of penetration into concrete with ultimate strength other than 4,000 psi, use X_f from Step 2, the concrete strength from Step 1d and Equation 4-202:

$$X'_f = X_f\,(4000/f'_c)^{1/2}$$

Step 4. To obtain the maximum penetration into concrete by metal fragments other than those of armor-piercing fragments use the penetration from Step 3, the penetrability coefficient k from Table 4-16 (+) and Equation 4-203.

$$X'_f = k\,X_f$$

Step 5. Calculate the limiting thickness of concrete at which perforation will occur from Equation 4-204.

$$T_{pf} = 1.13\,x\;\;d^{0.1} + 1.311\,d$$

Where applicable, replace X_f with X'_f from Step 3 or 4. If T_{pf} is less than T_c embedment will occur; if T_{pf} is greater than T_c the fragment will perforate the wall.

EXAMPLE 4A-10. MAXIMUM FRAGMENT PENETRATION

Required: **Maximum penetration of a primary fragment into a concrete wall; determine if perforation occurs.**

Solution:

Step 1. Given:

a. Type of fragment: mild steel

b. Primary fragment weight: W_f = 30 ounces

Primary fragment diameter: d = 2.15 inches

c. Striking velocity: v_s = 3,500 fps

d. Thickness of wall: T_c = 18 inches

Ultimate concrete compressive strength: f'_c = 4,000 psi

Step 2. Maximum penetration:

For:

W_f = 30 oz and v_s = 3,500 fps

X_f = 14.5 inches from Figure 4-78 (+)

or from Equation 4-199

$$X_f = 2.04 \times 10^{-6}\, d^{1.2}\, vs^{1.8} + d \quad \geq 2d$$

$$= 2.04 \times 10^{-6}\, (2.15)^{1.2}\ (3500)^{1.8} + 2.15$$

$$= 14.4 \text{ inches}$$

$$X_f \geq 2d = 2 \times 2.15 = 4.30 \quad \text{O.K.}$$

Step 3. Concrete strength adjustment (Equation 4-202)

$$X'_f = X_f\,(4000/f'_c)^{1/2}$$

$$= 14.5 \times 1 = 14.5 \text{ in}$$

Step 4. Fragment material adjustment:

a. k = 0.70 (Table 4-16 (+))

b. $X'_f = kX_f$ (Equation 4-203)

$$= 0.7 \times 14.5 = 10.15 \text{ in}$$

Step 5. Calculate minimum thickness to prevent perforation.

$$T_{pf} = 1.13\ X'_f\ d^{0.1} + 1.311\ d \qquad \text{(Equation 4-204)}$$

$$= 1.13\ (10.15)\ (2.15)^{0.1} + 1.311\ (2.15)$$

$$T_{pf} = 15.20 \text{ inches} \leq 18 \text{ in}$$

Since T_{pf} is less than T_c the fragment does not perforate the slab.

PROBLEM 4A-11. DETERMINATION OF THE OCCURRENCE AND EFFECTS OF PERFORATION

Problem: **Determine the residual velocity of a primary fragment if it perforates a concrete wall.**

Procedure:

Step 1. Determine the type, weight W_f, and striking velocity v_s of the primary fragment. Also, the thickness of the concrete wall T_c and the ultimate compressive stress f'_c of the concrete must be known.

Step 2. Proceed through Steps 2, 3, 4, and 5 of Problem 4A-10.If T_{pf} is greater than T_c, perforation will occur.

Step 3. If perforation is not indicated by the calculations in Step 2 then discontinue the analysis. If perforation does result, then compute the value of T_c/T_{pf}.

Step 4. Utilizing the value of T_c/T_{pf}, obtain v_r/v_s from Figure 4-79 (+) or 4-80 (+).

Step 5. With the values of v_s and v_r/v_s of Steps 1 and 4, calculate the residual velocity v_r.

EXAMPLE 4A-11. DETERMINATION OF THE OCCURRENCE AND EFFECTS OF PERFORATION

Required: Residual velocity of a primary fragment if it perforates a concrete wall.

Solution:

Step 1. Given:

a. Type of metal: mild steel

b. Primary fragment weight: W_f = 20 ounces

c. Primary fragment diameter: d = 1.89 inches

d. Striking velocity: v_s = 4,700 fps

e. Thickness of wall: T_c = 12 inches

f. Ultimate concrete compressive stress: f'_c = 4,500 psi

Step 2. For given conditions:

X_f = 19.75 inches (Figure 4-78 (+))

Actual maximum penetration:

$X'_f = 19.75\ (4000/4500)^{1/2}$ (Equation 4-202)

= 18.6 inches

k = 0.70 (Table 4-16 (+))

X'_f = 0.7 (18.6) = 13.0 inches (Equation 4-203)

Since T_{pf} is greater than X'_f, and X'_f (13.0 inches) already exceeds the wall thickness (12 inches), perforation will occur. It is necessary to determine T_{pf} (Equation 4-204) in order to calculate the residual fragment velocity. Hence:

$T_{pf} = 1.13\ (13.0)\ (1.89)^{0.1} + 1.311\ (1.89)$

= 15.6 + 2.5 = 18.1 inches

Step 3 T_c/T_{pf} = 12.0/18.1 = 0.663

Step 4. Since the given conditions correspond to a case

where:

$X_f > 2d$,

determine:

v_r/v_s

for: T_c/T_{pf} = 0.663 from Figure 4-80 (+).

Obtain:

$v_r/v_s = 0.55$

Step 5. $v_r = 0.55\ v_s$

$= 0.55\ (4{,}700) = 2{,}585$ fps

PROBLEM 4A-12. DETERMINATION OF THE OCCURRENCE OF SPALLING

Problem: **To determine if spalling of a concrete wall occurs if there is no perforation by the primary fragment.**

Procedure:

Step 1. Determine the type, weight W_f and striking velocity v_s of the primary fragment. Also, the thickness of the concrete wall and the ultimate compressive stress of the concrete f'_c must be known.

Step 2. Proceed through Steps 2, 3, 4, and 5 of Problem 4A-10.

Step 3. If embedment of the fragment occurs, compute the limiting concrete thickness at which spalling will occur according to:

$$T_{sp} = 1.215\, X_f\, d^{0.1} + 2.12\, d \qquad \text{(Equation 4-207)}$$

If T_{sp} is greater than T_c, spalling will occur.

EXAMPLE 4A-12. DETERMINATION OF THE OCCURRENCE OF SPALLING

Required: **Determine if spalling of a concrete wall occurs due to penetration by a primary fragment.**

Solution:

Step 1. Given:

a. Type of metal: armor-piercing steel

b. Primary fragment weight: W_f = 40 ounces

c. Primary fragment diameter: 2.38 inches

d. Striking velocity: v_s = 3,000 fps

e. Thickness of wall: T_c = 19 inches

f. Ultimate concrete compressive stress: f'_c = 5,000 psi

Step 2. For given conditions:

X_f = 12.8 inches (Figure 4-78 (+))

$X'_f = 12.8\ (4000/5000)^2$ (Equation 4-202)

$= 11.5$ in

$k = 1.00$ (Table 4-16 (+))

$X'_f = X_f$

Then:

$T_{pf} = 1.13\ (11.5)\ (2.38)^{0.1}$ (Equation 4-204)

$+ 1.311\ (2.38)$

$= 14.2 + 3.1 = 17.3$ inches

Since T_c is greater than 17.3 inches, embedment occurs.

Step 3. Determine minimum concrete thickness to prevent spalling from Equation 4-207:

$T_{sp} = 1.215\ (11.5)\ (2.38)^{0.1} + 2.12\ (2.38)$

$= 20.3$ inches

Since T_{sp} is greater than 19 inches, spalling will occur.

PROBLEM 4A-13. DETERMINATION OF THE EFFECTS OF A PRIMARY FRAGMENT ON A COMPOSITE WALL

Problem: **Determine the maximum penetration by a primary fragment into a composite wall and the resulting effects on the donor panel, sand layer and acceptor panel.**

Procedure:

Step 1. Determine the type, weight W_f, and striking velocity v_s of the primary fragment. Also, the thicknesses of the concrete donor panel T_c (donor), the sand layer T_s, and the concrete receiver panel T_c (acceptor) and the ultimate compressive stress f'_c of the concrete must be known.

Step 2. Proceed through Steps 2, 3, 4, and 5 of Problem 4A-10.

If embedment of the fragment in the donor panel occurs, perform Step 3 of Problem 4A-12 to determine if spalling takes place.

If perforation of the donor panel occurs, compute:

T_c (donor) /T_{pf}

and perform Steps 4 and 5 of Problem 4A-11 to find the residual velocity v_r.

Step 3. Utilizing v_r (donor) as the v_s of the sand layer and W_f, obtain X_s from Figure 4-81 (+).

If X_s is less than T_s, the fragment is embedded in the sand layer and the analysis is discontinued.

If X_s is greater than T_s, perforation of the sand occurs.

Step 4. Compute T_s/X_s if perforation results. Use this value and Figure 4-80 (+) to obtain v_r/v_s of the sand layer.

Calculate v_r(sand).

Step 5. Utilizing v_r(sand) as the v_s of the acceptor wall and W_f, obtain X_f (acceptor) from Figure 4-78 (+).

Proceed through Steps 3 and 4 of Problem 4A-10, if necessary.

If embedment of the fragment in the acceptor panel occurs, perform Step 3 of Problem 4A-12 to determine if spalling takes place.

If perforation of the acceptor wall occurs, compute T_c (acceptor) and perform Steps 4 and 5 of Problem 4A-11 to find v_r.

EXAMPLE 4A-13. DETERMINATION OF THE EFFECTS OF A PRIMARY FRAGMENT ON A COMPOSITE WALL

Required: **Maximum penetration by a primary fragment into a composite wall and the resulting effects on the donor panel, sand layer and the acceptor panel.**

Solution:

Step 1. Given:

a. Type of metal: armor-piercing steel

b. Primary fragment weight: W_f = 20 ounces

c. Primary fragment diameter: d = 1.89 inches

d. Striking velocity: v_s = 4,200 fps

e. Thicknesses:

T_c (donor)= 12 inches

T_s = 24 inches

T_c (acceptor) = 12 inches

f. Ultimate concrete compressive stress:

f'_c = 5,000 psi

Step 2. For given conditions:

X_f = 16.5 inches (Figure 4-78 (+))

$X'_f = 16.5\ (4000/5000)^2$ (Equation 4-202)

= 14.7 inches

k = 1.00 (Table 4-16 (+))

$X'_f = X_f$

Since X'_f is greater than 12 inches, perforation of the donor panel will certainly occur. T_{pf} must be calculated in order to determine the residual velocity of the fragment.

$T_{pf} = 1.13\ (14.7)\ (1.89)^{0.1} + 1.311\ (1.89)$

$= 17.7 + 2.5 = 20.2$ inches

$T_c/T_{pf} = 12/20.2 = 0.594$

Since X_{pf} is greater than $2d$, v_r/v_s = 0.61 from Figure 4-80 (+).

v_r (donor) = 0.61 (4,200) = 2,562 fps

Step 3. For:

v_s (sand) = 2,562 fps, (Figure 4-81 (+))

X_s = 64.0 inches

Since T_s is less than 64.0 inches, perforation of the sand layer will occur.

Step 4. T_s/X_s = 24/64.0 = 0.375

from Figure 4-80 (+)

v_r/v_s = 0.77

Step 5. v_r (sand) = 0.77 v_s

v_r = 0.77 (2,562) = 1,970 fps

Step 6. For:

v_s (acceptor) = 1,970 fps

X_f (acceptor) = 5.6 inches (Figure 4-78 (+))

$X'_f = 5.6\ (4000/5000)^{1/2}$ (Equation 4-202)

= 5.0 inches

k = 1.00 (Table 4-16 (+))

$X'_f = X_f$

$T_{pf} = 1.13\ (5.0)\ (1.89)^{0.1}$ (Equation 4-204)

+ 1.311 (1.89)

= 6.0 + 2.5 = 8.5 inches

Since T_{pf} is less than T_c (acceptor), the fragment is embedded in the receiver panel. Calculate T_{sp} to determine if spalling occurs:

$T_{sp} = 1.215\ (5.0)\ (1.89)^{0.1}$ (Equation 4-207)

+ 2.12 (1.89)

= 6.5 + 4.0 = 10.5 inches

Since T_{sp} is less than T_c (acceptor), spalling will not occur.

APPENDIX 4B LIST OF SYMBOLS

a	(1) acceleration (in/ms^2)
	(2) depth of equivalent rectangular stress block (in)
	(3) long span of a panel (in)
a_o	velocity of sold in air (ft/sec)
a_x	acceleration in x direction (in/ms^2)
a_y	acceleration in y direction (in/ms^2)
A	(1) area (in^2)
	(2) explosive composition factor (oz$^{1/2}$in$^{-3/2}$)
A_a	area of diagonal bars at the support within a width b (in^2)
A_b	area of reinforcing bar (in^2)
A_d	(1) door area (in^2)
	(2) area of diagonal bars at the support within a width b (in^2)
A_D	drag area (in^2)
A_f	net area of wall excluding openings (ft^2)
A_g	area of gross section (in^2)
A_H	maximum horizontal acceleration of the ground surface (g's)
A_l	area of longitudinal torsion reinforcement (in^2)
A_L	lift area (in^2)
A_n	(1) net area of section (in^2)
	(2) area of individual wall subdivision (ft^2)
A_o	area of openings (ft^2)
A_{ps}	area of prestressed reinforcement (in^2)
A_s	area of tension reinforcement within a width b (in^2)
A'_s	area of compression reinforcement within a width b (in^2)
A_s^-	area of rebound reinforcement (in^2)
A_{sH}	area of flexural reinforcement within a width b in the horizontal direction on each face (in^2)*

A_{sp} area of spiral reinforcement (in^2)

A_{st} total area of reinforcing steel (in^2)

A_{sV} area of flexural reinforcement within a width *b* in the vertical direction on each face (in^2)*

A_t area of one leg of a closed tie resisting torsion within a distance *s* (in^2)

A_v total area of stirrups or lacing reinforcement in tension within a distance, s_s or s_l and a width b_s or b_l (in^2)

A_V maximum vertical acceleration of the ground surface (g's)

A_w area of wall (ft^2)

A_I, A_{II} area of sector I and II, respectively (in^2)

b (1) width of compression face of flexural member (in)

(2) width of concrete strip in which the direct shear stresses at the supports are resisted by diagonal bars (in)

(3) short span of a panel (in)

b_f width of fragment (in)

b_s width of concrete strip in which the diagonal tension stresses are resisted by stirrups of area A_v (in)

b_l width of concrete strip in which the diagonal tension stresses are resisted by lacing of area A_v (in)

b_o failure perimeter for punching shear (in)

b_t center-to-center dimension of a closed rectangular tie along *b* (in)

B explosive constant defined in Table 2-7 (+) ($oz^{1/2}in^{7/6}$)

c (1) distance from the resultant applied load to the axis of rotation (in)

(2) damping coefficient

(3) width of column capital (in)

c_I, c_{II} distance from the resultant applied load to the axis of rotation for sectors I and II, respectively (in)

c_s dilatational velocity of concrete (ft/sec)

C (1) shear coefficient

(2) deflection coefficient for flat slabs

C_C deflection coefficient for the center of interior panel of flat slab

C_{cr} critical damping

C_d shear coefficient for ultimate shear stress of one-way elements

C_D drag coefficient

$C_D q$ drag pressure (psi)

$C_D q_o$ peak drag pressure (psi)

C_E equivalent load factor

C_f post-failure fragment coefficient ($lb^2\ ms^4/in^8$)

C_H shear coefficient for ultimate shear stress in horizontal direction for two-way elements*

C_L (1) leakage pressure coefficient from Figure 2-235 (+)

(2) deflection coefficient for midpoint of long side of interior flat slab panel

(3) lift coefficient

C_M maximum shear coefficient

C_m equivalent moment correction factor

C_p compression wave seismic velocity in the soil from Table 2-10 (+) (in/sec)

C_r sound velocity in reflected region from Figure 2-192 (+) (ft/ms)

C_R force coefficient for shear at the corners of a window frame

$C_{r\alpha}$ Peak reflected pressure coefficient at angle of incidence a

C_s shear coefficient for ultimate support shear for one-way elements

C_{sH} shear coefficient for ultimate support shear in horizontal direction for two-way elements*

C_{sV} shear coefficient for ultimate support shear in vertical direction for two-way elements*

C_S deflection coefficient for midpoint of short side of interior flat slab panel

C_u impulse coefficient at deflection X_u ($psi\text{-}ms^2/in^2$)

C'_u impulse coefficient at deflection X_m ($psi\text{-}ms^2/in^2$)

C_v shear coefficient for ultimate shear stress in vertical direction for two-way elements*

C_x shear coefficient for the ultimate shear along the long side of window frame

C_y shear coefficient for the ultimate shear along the short side of window frame

C_L confidence level

C_1 (1) impulse coefficient at deflection X_1 (psi-ms^2/in^2)

(2) ratio of gas load to shock load

C'_1 impulse coefficient at deflection X_m (psi-ms^2/in^2)

C_2 ratio of gas load duration to shock load duration

d (1) distance from extreme compression fiber to centroid of tension reinforcement (in)

(2) diameter (in)

(3) fragment diameter (in)

d' distance from extreme compression fiber to centroid of compression reinforcement (in)

d_b diameter of reinforcing bar (in)

d_c distance between the centroids of the compression and tension reinforcement (in)

d_{cH} distance between the centroids of the horizontal compression and tension reinforcement (in)

d_{co} diameter of steel core (in)

d_{cV} distance between the centroids of the vertical compression and tension reinforcement (in)

d_e distance from support and equal to distance d or d_c (in)

d_i average inside diameter of explosive casing (in)

d'_i adjusted inside diameter of casing (in)

d_l distance between center lines of adjacent lacing bends measured normal to flexural reinforcement (in)

d_p distance from extreme compression fiber to centroid of prestressed reinforcement (in)

d_{sp} depth of spalled concrete (in)

d_1 diameter of cylindrical portion of primary fragment (in)

D	(1) unit flexural rigidity (lb-in)
	(2) location of shock front for maximum stress (ft)
	(3) minimum magazine separation distance (ft)
	(4) caliber density (lb/in^3)
	(5) overall diameter of circular section (in)
	(6) damping force (lb)
	(7) displacement of mass from shock load (in)
D_E	equivalent loaded width of structure for non-planar wave front (ft)
D_H	maximum horizontal displacement of the ground surface (in)
DIF	dynamic increase factor
D_s	diameter of the circle through centers of reinforcement arranged in a circular pattern (in)
D_{sp}	diameter of the spiral measured through the centerline of the spiral bar (in)
DLF	dynamic load factor
D_V	maximum vertical displacement of the ground surface (in)
e	(1) base of natural logarithms and equal to 2.71828...
	(2) distance from centroid of section to centroid of pre-stressed reinforcement (in)
	(3) actual eccentricity of load (in)
e_b	balanced eccentricity (in)
$(2E')^{1/2}$	Gurney Energy Constant (ft/sec)
E	(1) modulus of elasticity
	(2) internal work (in-lbs.)
E_c	modulus of elasticity of concrete (psi)
E_m	modulus of elasticity of masonry units (psi)
E_s	modulus of elasticity of reinforcement (psi)
f	(1) unit external force (psi)
	(2) frequency of vibration (cps)
f'_c	static ultimate compressive strength of concrete at 28 days (psi)

f'_{dc}	dynamic ultimate compressive strength of concrete (psi)
f'_{dm}	dynamic ultimate compressive strength of masonry units (psi)
f_{ds}	dynamic design stress for reinforcement (a function of f_y, f_u, and Θ) (psi)
f_{du}	dynamic ultimate stress of reinforcement (psi)
f_{dy}	dynamic yield stress of reinforcement (psi)
f'_m	static ultimate compressive strength of masonry units (psi)
f_n	natural frequency of vibration (cps)
f_{ps}	average stress in the prestressed reinforcement at ultimate load (psi)
f_{pu}	specified tensile strength of prestressing tendon (psi)
f_{py}	yield stress of prestressing tendon corresponding to a 1 percent elongation (psi)
f_r	reflection factor
f_s	static design stress for reinforcement (psi)
f_{se}	effective stress in prestressed reinforcement after allowances for all prestress losses (psi)
f_u	static ultimate stress of reinforcement (psi)
f_y	static yield stress of reinforcement (psi)
F	(1) total external force (lbs)
	(2) coefficient for moment of inertia of cracked section
	(3) function of C_2 and C_1 for bilinear triangular load
F_o	force in the reinforcing bars (lbs)
F_E	equivalent external force (lbs)
F_D	drag force (lbs)
F_F	frictional force (lbs)
F_L	lift force (lbs)
F_N	vertical load supported by foundation (lbs)
g	acceleration due to gravity (32.2 ft/sec^2)
G	shear modulus (psi)

h	(1) charge location parameter (ft)
	(2) height of masonry wall
h_n	average clearing distance for individual areas of openings from Section 2-15.4.2
h_t	center-to-center dimension of a closed rectangular tie along h (in)
h'	clear height between floor slab and roof slab
H	(1) span height (in)*
	(2) distance between reflecting surface(*s*) and/or free edge(*s*) in vertical direction (ft)
	(3) minimum transverse dimension of mean presented area of object (ft)
H_c	height of charge above ground (ft)
H_s	height of structure (ft)
H_T	height of triple point (ft)
H_w	height of wall (ft)
H^c	heat of combustion (ft-lb/lb)
H^d	heat of detonation (ft-lb/lb)
i	unit positive impulse (psi-ms)
i_a	sum of blast impulse capacity of the receiver panel and the least impulse absorbed by the sand (psi-ms)
i_{ba}	blast impulse capacity of receiver panel (psi-ms)
i^-	unit negative impulse (psi-ms)
$\bar{i}_a$	sum of scaled unit blast impulse capacity of receiver panel and scaled unit blast impulse attenuated through concrete and sand in a composite element (psi-ms/lb$^{1/3}$)
i_b	unit blast impulse (psi-ms)
$\bar{i}_b$	scaled unit blast impulse (psi-ms/lb$^{1/3}$)
$\bar{i}_{ba}$	scaled unit blast impulse capacity of receiver panel of composite element (psi-ms/lb$^{1/3}$)

–

i_{bd} scaled unit blast impulse capacity of donor panel of composite element (psi-ms/lb$^{1/3}$)

$\overline{i}_{bt}$ total scaled unit blast impulse capacity of composite element (psi-ms/lb$^{1/3}$)

i_c impulse capacity of an element (psi-ms)

i_d total drag and diffraction impulse (psi-ms)

i_e unit excess blast impulse (psi-ms)

i_{fs} required impulse capacity of fragment shield (psi-ms)

i_g gas impulse (psi-ms)

i_r unit positive normal reflected impulse (psi-ms)

i_r^- unit negative normal reflected impulse (psi-ms)

$i_{r\alpha}$ peak reflected impulse at angle of incidence α (psi-ms)

i_s unit positive incident impulse (psi-ms)

i_s^- unit negative incident impulse (psi-ms)

i_{st} impulse consumed by fragment support connection (psi-ms)

I (1) moment of inertia (in^4/in for slabs) (in^4 for beams)

(2) total impulse applied to fragment

I_a average of gross and cracked moments of inertia (in^4/in for slabs) (in^4 for beams)

I_c moment of inertia of cracked concrete section (in^4/in for slabs) (in^4 for beams)

I_{ch} moment of inertia of cracked concrete section in horizontal direction (in^4/in)*

I_{cV} moment of inertia of cracked concrete section in vertical direction (in^4/in)*

I_g moment of inertia of gross concrete section (in^4/in for slabs) (in^4 for beams)

I_m mass moment of inertia (lb-ms^2-in)

I_n moment of inertia of net section of masonry unit (in^4)

I_s gross moment of inertia of slab (in^4/in)

I_{st} impulse consumed by the fragment support connection (psi-ms)

I_w gross moment of inertia of wall (in^4/in)

j ratio of distance between centroids of compression and tension forces to the depth d

k	(1) constant depending on the casing metal
	(2) effective length factor
k_v	velocity decay coefficient
K	(1) unit stiffness (psi/in for slabs) (lb/in/in for beams) (lb/in for springs)
	(2) constant defined in Section 2-18.2
K_e	elastic unit stiffness (psi/in for slabs) (lb/in/in for beams)
K_{ep}	elasto-plastic unit stiffness (psi/in for slabs) (lb/in/in for beams)
K_E	(1) equivalent elastic unit stiffness (psi/in for slabs) (lb/in/ in for beams)
	(2) equivalent spring constant (lb/in)
K_L	load factor
K_{LM}	load-mass factor
$(K_{LM})_u$	load-mass factor in the ultimate range
$(K_{LM})_{up}$	load-mass factor in the post-ultimate range
K_M	mass factor
K_R	resistance factor
KE	kinetic energy
l	charge location parameter (ft)
	(1) length of the yield line (in)
	(2) width of ½ of the column strip (in)
l_d	basic development length of reinforcing bar (in)
l_{dh}	development length of hooked bar (in)
l_c	length of cylindrical explosive (in)
l_p	spacing of same type of lacing bar (in)
l_s	span of flat slab panel (in)
L	(1) span length (in)*
	(2) distance between reflecting surface(*s*) and/or free edge(*s*) in horizontal direction (ft)
L_{cyl}	length of cylinder (in)

L_f	length of fragment (in)
L_H	clear span in short direction (in)
L_l	length of lacing bar required in distance s_l (in)
L_L	clear span in long direction (in)
L_o	embedment length of reinforcing bars (in)
L_s	length of shaft (in)
L_u	unsupported length of column (in)
L_w	wave length of positive pressure phase (ft)
L_w^-	wave length of negative pressure phase (ft)
L_x	clear span in long direction (in)
L_y	clear span in short direction (in)
L_{wb}, L_{wd}	wave length of positive pressure phase at points *b* and *d*, respectively (ft)
L_1	total length of sector of element normal to axis of rotation (in)
m	(1) unit mass (psi-ms^2/in for slabs) (lb-ms^2/in^2 for beams)
	(2) ultimate unit moment (in-lbs/in)
	(3) mass of fragment (lbs-ms^2/in)
m_a	average of the effective elastic and plastic unit masses (psi-ms^2/in for slabs) [beams, lb-ms^2/in^2]
m_e	effective unit mass (psi-ms^2/in for slabs) (lb-ms^2/in^2 for beams)
m_{sp}	mass of spalled fragments (psi-ms^2/in)
m_u	effective unit mass in the ultimate range (psi-ms^2/in for slabs) (lb-ms^2/in^2 for beams)
m_{up}	effective unit mass in the post-ultimate range (psi-ms^2/in)
M	(1) unit bending moment (in-lbs/in for slabs) (in-lbs for beams)
	(2) total mass (lb-ms^2/in)
	(3) design moment (in-lbs)
M_e	effective total mass (lb-ms^2/in)
M_u	ultimate unit resisting moment (in-lbs/in^2 for slabs) (in-lbs for beams)
M_u^-	ultimate unit rebound moment (in-lbs/in for slabs) (in-lbs for beams)

M_c moment of concentrated loads about line of rotation of sector (in-lbs)

M_A fragment distribution factor

M_E equivalent total mass (lb-ms^2/in)

M_{HN} ultimate unit negative moment capacity in horizontal direction (in-lbs/in)*

M_{HP} ultimate unit positive moment capacity in horizontal direction (in-lbs/in)*

M_{OH}, M_{OL} total panel moment for direction *H* and *L* respectively (in-lbs)

M_N ultimate unit negative moment capacity at supports (in-lbs/in for slabs) (in-lbs for beams)

M_P ultimate unit positive moment capacity at midspan (in-lbs/in for slabs) (in-lbs for beams)

M_{VN} ultimate unit negative moment capacity in vertical direction (in-lbs/in)*

M_{VP} ultimate unit positive moment capacity in vertical direction (in-lbs/in)*

M_1 value of smaller end moment on column

M_2 value of larger end moment on column

n (1) modular ratio

(2) number of time intervals

(3) number of glass pane tests

(4) caliber radius of the tangent ogive of fragment nose

N (1) number of adjacent reflecting surfaces

(2) nose shape factor

N_f number of primary fragments larger than W_f

N_u axial load normal to the cross section

N_T total number of fragments

p reinforcement ratio equal to A_s/bd or A_s/bd_c

p' reinforcement ratio equal to A'_s/ bd or A'_s/ bd_c

p_b reinforcement ratio producing balanced conditions at ultimate strength

p_o ambient atmospheric pressure (psi)

p_p prestressed reinforcement ratio equal to A_{ps}/bd_p

p_m mean pressure in a partially vented chamber (psi)

p_{mo} peak mean pressure in a partially vented chamber (psi)

p_r average peak reflected pressure (psi)

p_H reinforcement ratio in horizontal direction on each face*

p_T total reinforcement ratio equal to $p_H + p_V$

p_V reinforcement ratio in vertical direction on each face*

$p(x)$ distributed load per unit length

P (1) pressure (psi)

(2) concentrated load (lbs)

P^- negative pressure (psi)

P_c critical axial load causing buckling (lbs)

P_g maximum gas pressure (psi)

P_i interior pressure within structure (psi)

ΔP_i interior pressure increment (psi)

P_f fictitious peak pressure (psi)

P_{max} maximum average pressure acting on interior face of wall (psi)

P_o (1) peak pressure (psi)

(2) maximum axial load (lbs)

(3) atmospheric pressure (psi)

P_r peak positive normal reflected pressure (psi)

P_r^- peak negative normal reflected pressure (psi)

$P_{r\alpha}$ peak reflected pressure at angle of incidence α (psi)

P_{RIB} maximum average pressure on backwall (psi)

P_s positive incident pressure (psi)

P_{sb}, P_{se} positive incident pressure at points *b* and *e*, respectively (psi)

P_{so} peak positive incident pressure (psi)

P_{so}^- peak negative incident pressure (psi)

P_{sob},P_{sod},P_{soe} peak positive incident pressure at points *b*, *d*, and *e*, respectively (psi)

P_u ultimate axial load at actual eccentricity *e* (lbs)

P_x	ultimate load when eccentricity e_x is present
P_y	ultimate load when eccentricity e_y is present (lbs)
q	dynamic pressure (psi)
q_b, q_e	dynamic pressure at points *b* and *e*, respectively (psi)
q_o	peak dynamic pressure (psi)
q_{ob}, q_{oe}	peak dynamic pressure at points *b* and *e*, respectively (psi)
r	(1) unit resistance (psi)
	(2) radius of spherical TNT [density equals 95 lb/ft^3] charge (ft)
	(3) radius of gyration of cross section of column (in)
$\bar{r}$	unit rebound resistance (psi, for slabs) (lb/in for beams)
r_{avail}	dynamic resistance available (psi)
Δr	change in unit resistance (psi, for slabs) (lb/in for beams)
r_d	radius from center of impulse load to center of door rotation (in)
r_{DL}	uniform dead load (psi)
r_e	elastic unit resistance (psi, for slabs) (lb/in for beams)
r_{ep}	elasto-plastic unit resistance (psi, for slabs) (lb/in for beams)
r_{fs}	ultimate unit resistance of fragment shield (psi)
r_s	radius of shaft (in)
r_T	tension membrane resistance (psi)
r_u	ultimate unit resistance (psi, for slabs) (lb/in for beams)
r_{up}	post-ultimate unit resistance (psi)
r_1	radius of hemispherical portion of primary fragment (in)
R	(1) total internal resistance (lbs)
	(2) slant distance (ft)
	(3) ratio of *S*/G
	(4) standoff distance (ft)
R_{eff}	effective radius (ft)

R_f	(1) distance traveled by primary fragment (ft)
	(2) distance from center of detonation (ft)
R_g	uplift force at corners of window frame (lbs)
R_l	radius of lacing bend (in)
R_t	target radius (ft)
R_A	normal distance (ft)
R_E	equivalent total internal resistance (lbs)
R_G	ground distance (ft)
R_u	total ultimate resistance (lb)
R_I, R_{II}	total internal resistance of sectors I and II, respectively (lbs)
s	(1) sample standard deviation
	(2) spacing of torsion reinforcement in a direction parallel to the longitudinal reinforcement (in)
	(3) pitch of spiral (in)
s_s	spacing of stirrups in the direction parallel to the longitudinal reinforcement (in)
s_1	spacing of lacing in the direction parallel to the longitudinal reinforcement (in)
S	height of front wall or one-half its width, whichever is smaller (ft)
S'	weighted average clearing distance with openings (ft)
SE	strain energy
t	time (ms)
Δt	time increment (ms)
t_a	any time (ms)
t_b,t_e,t_f	time of arrival of blast wave at points *b*, *e*, and f, respectively (ms)
t_c	(1) clearing time for reflected pressures (ms)
	(2) average casing thickness of explosive charges (in)
t'_c	(1) adjusted casing thickness (in)
	(2) Clearing time for reflected pressures adjusted for wall openings (ms)
t_d	rise time (ms)

t_E	time to reach maximum elastic deflection (ms)
t_g	fictitious gas duration (ms)
t_m	time at which maximum deflection occurs (ms)
t_o	duration of positive phase of blast pressure (ms)
t_o^-	duration of negative phase of blast pressure (ms)
t_{of}	fictitious positive phase pressure duration (ms)
t_{of}^-	fictitious negative phase pressure duration (ms)
t_r	fictitious reflected pressure duration (ms)
t_u	time at which ultimate deflection occurs (ms)
t_y	time to reach yield (ms)
t_A	time of arrival of blast wave (ms)
t_{AG}	time of arrival of ground shock (ms)
t_1	time at which partial failure occurs (ms)
T	(1) duration of equivalent triangular loading function (ms)
	(2) thickness of masonry wall (in)
	(3) toughness of material (psi-in/in)
T_c	thickness of concrete section (in)
$\overline{T}_c$	scaled thickness of concrete section (ft/lb$^{1/3}$)
T_g	thickness of glass (in)
T_H	force in the continuous reinforcement in the short span direction (lbs)
T_i	angular impulse load (lb-ms-in)
T_L	force in the continuous reinforcement in the long span direction (lbs)
T_N	effective natural period of vibration (ms)
T_{pf}	minimum thickness of concrete to prevent perforation by a given fragment (in)
T_r	rise time (ms)
T_s	(1) thickness of sand fill (in)
	(2) thickness of slab (in)

T_{sp}	minimum concrete thickness to prevent spalling (in)
$\overline{T}_s$	scaled thickness of sand fill (ft/lb$^{1/3}$)
T_u	total torsional moment at critical section (in-lbs)
T_w	thickness of wall (in)
T_y	force of the continuous reinforcement in the short direction (lbs)
u	particle velocity (ft/ms)
u_u	ultimate flexural or anchorage bond stress (psi)
U	shock front velocity (ft/ms)
U_s	strain energy
v	velocity (in/ms)
v_a	instantaneous velocity at any time (in/ms)
v_b	boundary velocity for primary fragments (ft/sec)
v_c	ultimate shear stress permitted on an unreinforced web (psi)
v_f	maximum post-failure fragment velocity (in/ms)
v_f(avg)	average post-failure fragment velocity (in/ms)
v_i	velocity at incipient failure deflection (in/ms)
v_o	initial velocity of primary fragment (ft/sec)
v_r	residual velocity of primary fragment after perforation (ft/sec)
v_s	striking velocity of primary fragment (ft/sec)
v_{tc}	maximum torsion capacity of an unreinforced web (psi)
v_{tu}	nominal torsion stress in the direction of v_u (psi)
v_u	ultimate shear stress (psi)
v_{uH}	ultimate shear stress at distance d_e from the horizontal support (psi)*
v_{uV}	ultimate shear stress at distance d_e from the vertical support (psi)*
v_x	velocity in x direction (in/ms)
v_y	velocity in y direction (in/ms)

V	(1) volume of partially vented chamber (ft^3)
	(2) velocity of compression wave through concrete (in/sec)
	(3) velocity of mass under shock load (in/sec)
V_d	ultimate direct shear capacity of the concrete of width b (lbs)
V_{dH}	shear at distance d_e from the vertical support on a unit width (lbs/in)*
V_{dV}	shear at distance d_e from the horizontal support on a unit width (lbs/in)*
V_f	free volume (ft^3)
V_H	maximum horizontal velocity of the ground surface (in/sec)
V_o	volume of structure (ft^3)
V_s	shear at the support (lb/in, for panels) (lbs for beam)
V_{sH}	shear at the vertical support on a unit width (lbs/in)*
V_{sV}	shear at the horizontal support on a unit width (lbs/in)*
V_u	total shear on a width b (lbs)
V_V	maximum vertical velocity of the ground surface (in/sec)
V_x	unit shear along the long side of window frame (lb/in)
V_y	unit shear along the short side of window frame (lbs/in)
w	applied uniform load (lbs-in^2)
w_c	(1) unit weight (psi, for panels) (lb/in for beam)
	(2) weight density of concrete (lbs/ft^3)
w_s	weight density of sand (lbs/ft^3)
W	(1) design charge weight (lbs)
	(2) external work (in-lbs)
	(3) width of wall (ft)
W_A	weight of fluid (lbs)
W_{ACT}	actual quantity of explosives (lbs)
W_c	total weight of explosive containers (lbs)
W_E	effective charge weight (lbs)
W_{Eg}	effective charge weight for gas pressure (lb)

W_{EXP}	weight of explosive in question (lbs)
W_f	weight of primary fragment (oz)
$\overline{W}_f$	average fragment weight (oz)
W_F	weight of frangible element (lb/ft^2)
W_{CI}	weight of inner casing (lbs)
W_{co}	total weight of steel core (lbs)
W_{CO}	weight of outer casing (lbs)
W_{c1}, W_{c2}	total weight of plates 1 and 2, respectively (lbs)
W_s	width of structure (ft)
WD	work done
x	yield line location in horizontal direction (in)*
X	(1) deflection (in)
	(2) distance from front of object to location of largest cross section to plane of shock front (ft)
X_a	any deflection (in)
X_c	lateral deflection to which a masonry wall develops no resistance (in)
X_{DL}	deflection due to dead load (in)
X_e	elastic deflection (in)
X_E	equivalent elastic deflection (in)
X_{ep}	elasto-plastic deflection (in)
X_f	maximum penetration into concrete of armor-piercing fragments (in)
X_f'	maximum penetration into concrete of fragments other than armor-piercing (in)
X_m	maximum transient deflection (in)
X_p	plastic deflection (in)
X_s	(1) maximum penetration into sand of armor-piercing fragments (in)
	(2) static deflection (in)
X_u	ultimate deflection (in)

X_1	(1) partial failure deflection (in)
	(2) deflection at maximum ultimate resistance of masonry wall (in)
y	yield line location in vertical direction (in)*
y_t	distance from the top of section to centroid (in)
Z	scaled slant distance (ft/lb$^{1/3}$)
Z_A	scaled normal distance (ft/lb$^{1/3}$)
Z_G	scaled ground distance (ft/lb$^{1/3}$)
α	(1) angle formed by the plane of stirrups, lacing, or diagonal reinforcement and the plane of the longitudinal reinforcement (deg)
	(2) angle of incidence of the pressure front (deg)
	(3) acceptance coefficient
	(4) trajectory angle (deg.)
α_{ec}	ratio of flexural stiffness of exterior wall to flat slab
α_{ecH}, α_{ecL}	ratio of flexural stiffness of exterior wall to slab in direction *H* and *L* respectively
ß	(1) coefficient for determining elastic and elasto-plastic resistances
	(2) particular support rotation angle (deg)
	(3) rejection coefficient
	(4) target shape factor from Figure 2-212 (+/+)
$ß_1$	factor equal to 0.85 for concrete strengths up to 4,000 psi and is reduced by 0.05 for each 1,000 psi in excess of 4,000 psi
γ	coefficient for determining elastic and elasto-plastic deflections
γ_p	factor for type of prestressing tendon
δ	moment magnifier
δ_n	clearing factor
Δ	deflection at sector's displacement (in)
ε'_c	average strain rate for concrete (in/in/ms)
ε_m	unit strain in mortar (in/in)
ε'_s	average strain rate for reinforcement (in/in/ms)

ε_u	rupture strain (in/in/ms)
Θ	(1) support rotation angle (deg)
	(2) angular acceleration (rad/ms^2)
Θ_{max}	maximum support rotation angle (deg)
Θ_H	horizontal rotation angle (deg)*
Θ_V	vertical rotation angle (deg)*
λ	increase in support rotation angle after partial failure (deg)
μ	(1) ductility factor
	(2) coefficient of friction
ν	Poisson's ratio
ρ	(1) mass density (lbs-ms^2/in^4)
	(2) density of air behind shock front (lbs/ft^3)
ρ_a	density of air (oz/in^3)
ρ_c	density of casing (oz/in^3)
ρ_f	mass density of fragment (oz/in^3)
ρ_o	mass density of medium (lb-ms^2/in^4)
σ_u	fracture strength of concrete (psi)
Σ_o	effective perimeter of reinforcing bars (in)
ΣM	summation of moments (in-lbs)
ΣM_N	sum of the ultimate unit resisting moments acting along the negative yield lines (in-lbs)
ΣM_p	sum of the ultimate unit resisting moments acting along the positive yield lines (in-lbs)
τ_s	maximum shear stress in the shaft (psi)
ϕ	(1) capacity reduction factor
	(2) bar diameter (in)
	(3) TNT conversion factor
ϕ_r	assumed shape function for concentrated loads

$\phi(x)$ assumed shape function for distributed loads free edge

ω angular velocity (rad./ms)

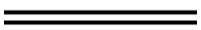 simple support

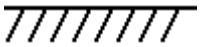 fixed support

either fixed, restrained, or simple support

* Note. This symbol was developed for two-way elements which are used as walls. When roof slabs or other horizontal elements are under consideration, this symbol will also be applicable if the element is treated as being rotated into a vertical position.

APPENDIX 4C BIBLIOGRAPHY

1. ACI Design Handbook: Beams, One-Way Slabs, Brackets, Footings, Pile Caps, Columns, Two-Way Slabs, and Seismic Design, Special Publication 17, American Concrete Institute, 1997.

2. ACI Detailing Manual, Special Publication 66(04), American Concrete Institute, Detroit, MI, 2004.

3. Building Code Requirements for Structural Concrete (ACI 318-08) and Commentary, ACI Committee 318, American Concrete Institute, Detroit, MI, January 2008.

4. Design and Analysis of Hardened Structures to Conventional Weapons Effects, The Departments of the Army, Air Force, and Navy and the Defense Special Weapons Agency, Army TM 5-855-1, Air Force Manual AFPAM 32-1147(I), Navy NAVFAC P-1080, DSWA DAHSCWEMAN-97, October 1998.

5. Design Criteria for Deflection Capacity of Conventionally Reinforced Concrete Slabs, an investigation conducted by Construction Technology Laboratories, Structural Analytical Section, 5420 Old Orchard Road, Skokie, Illinois 60077, for Civil Engineering Laboratory, Naval Construction Battalion Center, Port Hueneme, CA, sponsored by Naval Facilities Engineering Command, Phase I - State-of-the-Art Report, CR 80.026, October 1980, Phase-II - Design and Construction Requirements, CR 80.027. October 1980, Phase III - Summary of Design Criteria and Design and Construction Details - Design Examples, CR 80.028, October 1980.

6. Design Manual, AEC Test Structures , Volumes II and III, by Holmes and Narver, Inc., under Contract AT (29-2)-20, for U.*S*. Atomic Energy Commission, Albuquerque Operations Office, Albuquerque, NM, December 1961.

7. Design of Structures to Resist Nuclear Weapons Effects, ASCE Manual of Engineering Practice No. 42, American Society of Civil Engineers, New York, NY, 1961.

8. Design of Structures to Resist the Effects of Nuclear Weapons, Department of the Army Technical Manual *TM* 5-856-2, 3 and 4, Washington, *D*.C.

9. Dynamic Tests of Concrete Reinforcing Steels, Technical Report *R* 394, U.*S*. Naval Civil Engineering Laboratory, Port Hueneme, CA, September 1965.

10. Effects of Impact and Explosion, Volume 1, Office of Scientific Research and Development, National Defense Research Committee, Washington, *D*.C., 1946 (Confidential).

11. Fundamentals of Protective Design (Non-Nuclear), Department of the Army, Technical Manual *TM* 5-855-1, Washington, *D*.C., July 1965.

12. Impact Design Criteria for Blockhouses Subjected to Abortive Launch Environments, Technical Publication PMR-TR-70-2, Mechanics Research, Inc., for the Pacific Missile Range, Point Mugu, CA, July 1970.

13. Industrial Engineering Study to Establish Safety Design Criteria for Use in Engineering of Explosive Facilities and Operations, by Ammann & Whitney Consulting Engineers, New York, NY, under Contract DA-28-017-501-0RD-3889, for Process Engineering Branch, A.*P*.*M*.*E*.*D*., Picatinny Arsenal, Dover, NJ, April 1963.

14. Non-Nuclear Weapons Effects on Protective Structures (U), Technical Report No. AFWL-TR-69-57, (SECRET), Mechanics Research, Inc., for the Air Force Weapons Laboratory, Kirtland Air Force Base, NM, September 1969.

15. Strength and Behavior of Laced Reinforced Concrete Slabs Under Static and Dynamic Load, Technical Report R620, prepared by Naval Civil Engineering Laboratory, Port Hueneme, California, Sponsored by Department of the Army, Picatinny Arsenal, April 1969.

16. Summary of One-Third Scale Slab Tests and Scaled Bay Structure Tests, by Ammann & Whitney, Consulting Engineers, New York, NY, under Contract DA28-017-AMC-423(A) for Picatinny Arsenal, Dover, NJ, March 1969.

17. Ultimate Strength Design Handbook, Volume No. 1, Special Publication No. 17. ACI Committee 340, American Concrete Institute, Detroit, MI, 1967.

18. Ultimate Strength Design of Reinforced Concrete Columns, Publication SP-7, Interim Report of ACI Committee 340, American Concrete Institute, Detroit, MI, 1964.

19. U.*S*. Army Engineer Waterways Experiment Station, Technical Report *N*-72-10, Design and Testing of a Blast-Resistant Reinforced Concrete Slab System, Criswell, *M*.*E*., Vicksburg, MS, 1972.

20. Amirian, A., Dobbs, *N*. and Dede, *M*., Technical Approach for Structural Design Procedures for a Family of Horseshoe-Shaped MTC (Phase I), prepared for Naval Civil Engineering Laboratory, Port Hueneme, CA, by Ammann and Whitney, Consulting Engineers, New York, *N*.*Y*., August 1985.

21. Ayvazian, *H*. and DeDe, *M*., Development of Preliminary Designs for NAVFAC MTCs and Preparation of Construction Cost Estimates, prepared for Naval Civil Engineering Laboratory, Port Hueneme, CA, by Ammann and Whitney, Consulting Engineers, New York, *N*.*Y*., Draft

22. Ball, J. *W*., Baylot, J.*T*. and Kiger, *S*.A., Kirtland Underground Munitions Storage Complex Model Designs, Construction, and Test Data, Technical Report *SL*-84-14, prepared by Structures Laboratory, Department of the Army, Waterways Experiment Station, Corps of Engineers, *P*.O. Box 631, Vicksburg, Mississippi 39180-0631, for Defense Nuclear Agency, Washington, *D*.C. 20305, Under DNA

Subtask B990AXRE, Work Unit 0004 and Subtask B99QAXRD, Work Unit 0013, "Advanced Design Explosive Tests," September 1984.

23. Baylot, J.*T*., Kiger, *S*.A. and Ball, J.*W*., Structural Design of Blast-Containment Facilities, Abstract for the Twenty-First Explosive Safety Seminar, prepared by U.*S*. Army Engineer Waterways Experiment Station, Vicksburg, Mississippi, August 1984.

24. Baylot, J.*T*., Vulnerability of an Underground Weapon Storage Facility, Technical Report *SL*-84-16, prepared by Structures Laboratory, Department of the Army, Waterways Experiment Station, Corps. of Engineers, *P*.O. Box 631, Vicksburg, Mississippi 39180-0631, for Defense Nuclear Agency, Washington, *DC* 20305, Under Subtask A99QAXFC, Work Unit 00046, September 1984.

25. Bergstrom, *P*., et *al*., Hard-Structures Munitions -Phase I: Warhead (U), AFATL-TR-67-13, Volume III (AD-379, 468), (SECRET), Chamberlain Corporation, February 1967.

26. Beth, *R*. A., Final Report on Concrete Penetration, Report No. A-388, National Defense Research Committee, Office of Scientific Research and Development, March 1946.

27. Beth, *R*. A. and Stipe, J. G., Penetration and Explosion Tests on Concrete Slabs, Report I: Data, Interim Report No. 20, Committee on Passive Protection Against Bombing, National Research Council, January 1943.

28. Branson, *D*., Deformation of Concrete Structures, McGraw-Hill, Inc., New York, NY, 1977.

29. Brown, J. *W*., Response of Selected Materials to High-Speed Fragment Impact, U.*S*. Army Engineer Waterways Experiment Station, Vicksburg, MS, 1970.

30. Cohen, *E*. and Dobbs, *N*., Design Procedures and Details for Reinforced Concrete Structures Utilized in Explosive Storage and Manufacturing Facilities, Ammann & Whitney, Consulting Engineers, New York, NY, Annals of the New York Academy of Sciences, Conference on Prevention of and Protection Against Accidental Explosion of Munitions , Fuels and Other Hazardous Mixtures, Volume 152, Art. 1, October 1968.

31. Cohen, *E*. and Dobbs, *N*., Models for Determining the Response of Reinforced Concrete Structures to Blast Loads, Ammann & Whitney, Consulting Engineers, New York, NY, Annals of the New York Academy of Sciences, Conference on Prevention of and Protection Against Accidental Explosion of Munitions, Fuels and Other Hazardous Mixtures, Volume 152, Art. 1, October 1968.

32. Cohen, *E*. and Dobbs, *N*., Supporting Studies to Establish Safety Design Criteria for Storage and Processing of Explosive Materials - Interim *Re*-port No. 1, Summary of One-Third Scale Reinforced Concrete Slab Tests, Technical Memorandum C-1, by Ammann & Whitney, Consulting Engineers, New York, NY,

under Contract: DA-28-017-AMC-423(A) for Picatinny Arsenal, Dover, NJ, June 1965.

33. Coltharp, *D*.*R*., Vitayaudom, *K*.*P*. and Kiger, *S*.A., NATO Semihardened Facility Design Criteria Improvement, Final Report, prepared by Engineering and Services Laboratory, Air Force Engineering and Services Center, Tyndall Air Force Base, Florida 32403. June 1985.

34. Criswell, *M*.*E*., Design and Testing of a Blast-Resistant Reinforced Concrete Slab System, Technical Report *N*-72-10, Conducted by U.*S*. Army Engineer Waterways Experiment Station, Weapons Effects Laboratory, Vicksburg, Mississippi, sponsored by Defense Civil Preparedness Agency, Work Order No. DAH C20-68-*W*-0192, Work Unit 1127E, November 1972.

35. Dede, *M*. and Amirian, A., Test Plan to Verify Failure Criteria for Conventionally Reinforced Concrete Slabs, prepared for Naval Civil Engineering Laboratory, Port Hueneme, California, by Ammann and Whitney, Consulting Engineers, New York, *N*.*Y*., April 1985.

36. Doyle, J. *M*., Klein, *M*. J. and Shah, *H*., Design of Missile Resistant Concrete Panels, Preprints of the 2nd International Conference on Structural Mechanics in Reactor Technology, Vol. 4, Commission of the European Communities, Brussels, 1973, Paper No. J 3/3.

37. Fisher, *E*. *M*., Explosion Effects Data Sheets, Report 2986, U.*S*. Naval Ordnance Laboratory, Silver Spring, MD, 1955.

38. Getchell, J.V. and Kiger, *S*.A., Vulnerability of Shallow-Buried Flat-Roof Structures, Technical Report *SL*-80-7, prepared by Structures Laboratory, U.*S*. Army Engineer Waterways Experiment Station, *P*.O. Box 631, Vicksburg, Mississippi 39180, for Defense Nuclear Agency, Washington, *D*.C. 20305 and Office, Chief of Engineers, U.*S*. Army, Washington, *D*.C. 20314, under DNA Subtask Y99QAXSC062, Work Unit 42, and Subtask H191AXSX337, Work Unit 02, and OCE *R*&*D* Project 4A762719AT40, Task AO, Work Unit 008, Report 2, Foam HEST 4, October 1980, Report 3, Foam HEST 5, February 1981, Report 4, Foam HEST 3 and 6, December 1981 and Report 5, Foam HEST 7, February 1982.

39. Gewaltney, *R*. C., Missile Generation and Protection in Light-Water-Cooled Power Reactor Plants, Nuclear Safety, 10(4): July-August 1969.

40. Giere, A. C., Calculating Fragment Penetration and Velocity Data for Use in Vulnerability Studies, NAVORD Report 6621, U.*S*. Naval Nuclear Evaluation Unit, Albuquerque, NM, October 1959.

41. Hoffman, *P*. *R*., McMath, *R*. *R*. and Migotsky, *E*., Projectile Penetration Studies AFWL Technical Report No. WL-TR-64-102, Avco Corporation for the Air Force Weapons Laboratory, Kirtland Air Force Base, NM, December 1964.

42. Ingraham, J. *M*. and Abbott, *K*. *N*., Feasibility Study of Laminated Metallic Armor (U), AMRA TR 63-30, (CONFIDENTIAL), U.*S*. Army Materials Research Agency, Watertown, MA, December 1963.

43. Iqbal, *M*. and Derecho, A., Design Criteria for Deflection Capacity of Conventionally Reinforced Concrete Slabs, Phase I - State-of-the-Art Report, Report No. CR 80.026, Naval Civil Engineering Laboratory, Port Hueneme, CA, October 1980.

44. Johnson, C. and Moseley, J.*W*., Preliminary Warhead Terminal Ballistic Handbook. Part 1: Terminal Ballistic Effects, NAVWEPS Report No. 7673, U.*S*. Naval Weapons Laboratory, Dahlgren, VA, March 1964.

45. Keenan, *W*. A., Strength and Behavior of Laced Reinforced Concrete Slabs Under Static and Dynamic Load, Technical Report *R*-620, U.*S*. Naval Civil Engineering Laboratory, Port Hueneme, CA, April 1969.

46. Keenan, *W*., Tancreto, J., Meyers, G., Johnson, F., Hopkins, J., Nickerson, *H*. and Armstrong, *W*., NCEL Products Supporting DOD Revision of NAVFAC P397, Technical Memorandum 2591TM, prepared by Naval Civil Engineering Laboratory, Port Hueneme, California 93043, Program No.: Y0995-01-003-201, Sponsored by Naval Facilities Engineering Command, Alexandria, Virginia 22332, March 1983.

47. Kiger, *S*.A. and Albritton, G.*E*., Response of Burried Hardened Box Structures to the Effects of Localized Explosions, Technical Report *SL*-80-1, prepared by Structures Laboratory, U.*S*. Army Engineer Waterways Experiment Station, *P*.O. Box 631, Vicksburg, Mississippi 39180, for Defense Nuclear Agency, Washington, *D*.C. 20305 and Office, Chief of Engineers, U.*S*. Army, Washington, *D*.C. 20314, under DNA Subtask Y99QAXSC062, Work Unit 04, and OCE *R*&*D* Project 4A762719AT40, Task A1, Work Unit 027, March 1980.

48. Kymer, J. *R*., Penetration Performance of Arrow Type Projectiles, Report R1814, U.*S*. Army Frankford Arsenal, Philadelphia, PA, May 1966.

49. Liu, *T*.C., Strength Design of Reinforced Concrete Hydraulic Structures, Preliminary Strength Design Criteria, Technical Report *SL*-80-4, Report 1 of a series, prepared by Structures Laboratory, U.*S*. Army Engineer Waterways Experiment Station, *P*.O. Box 631, Vicksburg, Mississippi 39180, for Office, Chief of Engineers, U.*S*. Army, Washington, *D*.C. 20314, under CWIS 31623, July 1980.

50. Malvar, L. J., Review of Static and Dynamic Properties of Steel Reinforcing Bars, ACI Materials Journal, vol. 95, no. 5, September-October 1998, pp. 609-616.

51. Malvar, L. J. and Crawford, J. E., Dynamic Increase Factors for Steel Reinforcing Bars, Twenty-Eighth DOD Explosive Safety Seminar Proceedings, Orlando, FL, August 1998.

52. Malvar, L. J. and Ross, C. A., Review of Static and Dynamic Properties of Concrete in Tension, ACI Materials Journal, vol. 95, no. 6, November-December 1998, pp. 735-739.

53. Mascianica, F. *S*., Summary of Terminal Ballistic Data on Lightweight Armor Materials (U), AMMRC TR 69-17, (CONFIDENTIAL), U.*S*. Army Materials and Mechanics Research Center, Watertown, MA, July 1969.

54. Nara, *H*. *R*. and Denington, *R*. J. Ricochet and Penetration of Steel Spheres in Clay and Sand Soils, *TM*-E7, AD-059 883, Case Institute of Technology, Project DOAN BROOK, October 1954.

55. Newmark, *N*. *M*. and Haltiwanger, J. *D*., Air Force Design Manual, Principles and Practices for Design of Hardened Structures, Technical Documentary Report No. AFSWC-TDR-62-138, by Department of Civil Engineering, University of Illinois, Urbana, Illinois, under Contract AF29 (601)-2390 for Research Directorate, Air Force Special Weapons Center, Air Force Systems Command, Kirtland Air Force Base, NM, December 1962.

56. Park, *R*. and Gamble, *W*. *L*., Reinforced Concrete Slabs, Second Edition, ISBN 978-0-471-34850-4, John Wiley & Sons, New York, NY, December 1999.

57. Pecone, G., Design of Flat Slabs Subjected to Blast Loads, prepared for Northern Division, Naval Facilities Engineering Command, U.*S*. Naval Base, Philadelphia, PA, by Ammann and Whitney, Consulting Engineers, New York, *N*.*Y*., Contract No. *N* 62472-76-C-1148, June 1982.

58. Recht, *R*., et *al*., Application of Ballistic Perforation Mechanics to Target Vulnerability and Weapons Effectiveness Analysis (U), NWC TR 4333 (Confidential), Denver Research Institute for the Naval Weapons Center, China Lake, CA, October 1967.

59. Richey, *H*. *M*., Armed Services Explosives Safety Board Dividing Wall Pro- gram, Phase C, Tests 1 through 13, U.*S*. Naval Weapon Center, China Lake, CA, 1964 (Secret Restricted Data).

60. Rindner, *R*. *M*., Establishment of Safety Design Criteria for Use in Engineering of Explosive Facilities and Operations, Report No. 2, Detonation by Fragment Impact, Technical Report *DB*-TR: 6-59, Picatinny Arsenal, Dover, NJ, March 1959.

61. Robertson, *H*.*P*., Terminal Ballistics, Preliminary Report, Committee on Passive Protection Against Bombing, National Research Council, January 1941.

62. Rohani, *B*., Fragment and Projectile Penetration Resistance of Soils: Report 2, High-Velocity Fragment Penetration into Laboratory-Prepared Soil Targets, Miscellaneous Paper *S*-71-12, U.*S*. Army Engineer Waterways Experiment Station, Vicksburg, MS, June 1973.

63. Stipe, J. G., et *al*., Ballistic Tests on Small Concrete Slabs, Interim Report No. 28, Committee on Fortification Design, National Research Council, June 1944.

64. Schumacher, *R*.*N*., Kingery, C.*N*. and Ewing, Jr., *W*.O., Airblast and Structural Response Testing of a 1/4 Scale Category 1 Suppressive Shield, BRL Memorandum Report No. 2623, by U.*S*.A. Ballistic Research Laboratories, Aberdeen Proving Ground, Maryland, May 1976.

65. Schwartz, A., et. *al*., Establishment of Safety Design Criteria for Use in Engineering of Explosive Facilities and Operations, Report No. 6, Test of One-Tenth Scale Bay Structure, Technical Report 3439, by Picatinny Arsenal, Dover, NJ, and Ammann & Whitney, Consulting Engineers, New York, NY, under Contract DA-28-017-AMC-423(A), July 1966.

66. Takayahagi, *T*. and Derecho, A., Design Criteria for Deflection Capacity of Conventionally Reinforced Concrete Slabs, Phase III - Summary of Design Criteria and Construction Details - Design Examples, Report No. CR 80.028, Naval Civil Engineering Laboratory, Port Hueneme, CA, October 1980.

67. Takayanagi, *T*., Derecho, A. and Iqbal, *M*., Design Criteria for Deflection Capacity of Conventionally Reinforced Concrete Slabs, Phase II - Design and Construction Requirements, Report No. CR 80.027, Naval Civil Engineering Laboratory, Port Hueneme, CA, October 1980.

68. Tancreto, J., Design Criteria for Deflection Capacity of Conventionally Reinforced Concrete Slabs, Naval Civil Engineering Laboratory, Special Project 1311 SP, Port Hueneme, CA, 1980.

69. Thomas, *L*.*H*., Computing the Effect of Distance on Damage by Fragments, Report No. 468, Ballistic Research Laboratories, Aberdeen Proving Ground, MD, May 1944.

70. Timoshenko, *S*. and Woinowsky-Krieger, *S*., Theory of Plates and Shells, McGraw-Hill Book Co., New York, NY, 1959.

71. Vanderbilt, *M*., Sozen, *M*. and Seiss, C., Deflections of Multiple-Panel Reinforced Concrete Floor Slabs, Journal of the Structural Division, Proceedings of the American Society of Civil Engineers, August 1965.

72. Vargas's, *L*. *M*., Hokanson, J. C. and Rinder, *R*. *M*., Explosive Fragmentation of Dividing Walls, by Southwest Research Institute, San Antonio, TX, Contractor Report ARLCD-CR-81018, U.*S*. Army Armament Research and Development Command, Large Caliber Weapons Systems Laboratory, Dover, NJ, July 1981.

73. Wachtell, *S*., Comparison of Blast Response-Scaled *vs*. Full-Size Concrete Structures, Picatinny Arsenal, Dover, NJ, Annals of the New York Academy of Sciences, Conference on Prevention of and Protection Against Accidental Explosions of Munitions, Fuels and Other Hazardous Mixtures, Volume 152, Art. 1, October 1968.

74. Wang, Chu-Kia and Salmon, Charles G., and Pincheira, Jose A., Reinforced Concrete Design, Seventh Edition, ISBN: 978-0-471-26286-2, John Wiley and Sons, Inc., New York, NY, July 2006.

75. Whitney, C. *S*., Plastic Theory of Reinforced Concrete Design, Transactions of the American Society of Civil Engineers, Vol. 107, ASCE, New York, NY, 1942.

76. Whitney, C. *S*. and Cohen, *E*., Guide for Ultimate Strength Design of Reinforced Concrete, Ammann & Whitney, Consulting Engineers, New York, NY, Journal of the American Concrete Institute, November 1956.

77. Whitney, C. *S*., et. *al*., Design of Blast-Resistant Construction for Atomic Explosions, Ammann & Whitney, Consulting Engineers, New York, NY, Journal of the American Concrete Institute, March 1955.

78. Wood, *R*. *W*., Plastic and Elastic Design of Slabs and Plates, The Ronald Press Company, New York, NY, 1961.

79. Woodson, S. C. and Zehrt, W. H., Jr., Investigation of Army TM 5-1300/NAVFAC P-397/AFR 88-22 Diagonal Tension Requirements at Low Scaled Distances, Thirty-Second DOD Explosives Safety Seminar Proceedings, Philadelphia, PA, August 2006.

80. Zehrt, W. H., Jr., Woodson, S. C., and Beck, D. C., Investigation of Army TM 5-1300/NAVFAC P-397/AFR 8-22 Bar Bend Requirements for Single Leg Stirrups used as Diagonal Tension Reinforcement, Thirty-Second DOD Explosives Safety Seminar Proceedings, Philadelphia, PA, August 2006.

81. Hentz, S., Donze, F., and Daudeville, L. (2004a), “Discrete element modeling of concrete submitted to dynamic loading at high strain rates,” Computer and Structures, 82, pp. 2509-2524

82. Hentz, S., Daudeville, L, and. Donze, F. (2004b), “Identification and validation of a discrete element for concrete,” Journal of Engineering Mechanics, ASCE, Vol. 130, No. 6, June, pp. 709-719.

83. Zheng, D. and Li, Q., (2004), “An explanation for rate effect of concrete strength based on fracture toughness including free water viscosity,” Engineering Fracture Mechanics, 71, pp. 2319-2327.

84. Ozbolt, Josko, Weerheijm, J., and Sharma, A, (2013), “Dynamic Tensile Resistance of Concrete- Split Hopkinson Bar Test,” VIII International Conference on Fracture Mechanics of Concrete and Concrete Structures, FraMCoS-S.

85. Haussler-Combe, U. and Kuhn, T., (2013), “A viscoelastic retarded damage material law for concrete structures exposed to impact and explosions,” VIII International Conference on Fracture Mechanics of Concrete and Concrete Structures, FraMCoS-S.

86. Rossi, P, (1991), “A physical phenomenon which can explain the mechanical behavior or concrete under high strain rates,” Materials and Structures, 24, 422-424.

87. Rossi, P, Van Mier, JGM, Toutlemode, R., Le Maou, F., and Boulay, C., (1994), “Effect of loading rate on the strength of concrete subjected to uniaxial tension, Materials and Structures, 27, pp. 260-264.

88. Janach, W., (1976), “The role of bulking in brittle failure of rocks under rapid compression,” International Journal of Rock Mechanics and Mineral Science Geomechanics, 13, pp. 177-186

89. Reinhardt, H.W., and Weerheigm, J., (1991) “Tensile fracture of concrete at high loading rates taking account of inertia and crack velocity effects,” International Journal of Fracture, 51, pp. 31-42. (high strain rate effects due to inertia)

90. Eibl, J. and Schmidt-Hurtienne, B., (1999) “Strain rate-sensitive constitutive law for concrete,” Journal of Engineering Mechanics, 125, pp. 1411-1420. (high strain rate effects due to inertia)

91. Rowell, S. P., Grey, C. E., Woodson, S. C. and Hager, K. P., “High Strain-Rate Testing of Mechanical Couplers,” ERDC TR-09-8, US Army Corps of Engineers, Engineer Research and Development Center, September 2009.