CHAPTER 5: STRUCTURAL STEEL DESIGN

CHAPTER 5 STRUCTURAL STEEL DESIGN

CHAPTER 5 STRUCTURAL STEEL DESIGN 5-1

5-1 PURPOSE. 5-1

5-2 OBJECTIVE. 5-1

5-3 BACKGROUND. 5-1

5-4 SCOPE. 5-2

5-5 FORMAT. 5-4

5-6 CHAPTER CONTENTS. 5-4

5-7 DIFFERENCES BETWEEN STEEL AND CONCRETE STRUCTURES IN PROTECTIVE DESIGN 5-5

5-8 ECONOMY OF DESIGN OF PROTECTIVE STRUCTURES IN THE INELASTIC RANGE. 5-6

5-9 APPLICATIONS OF STEEL ELEMENTS AND STRUCTURES IN PROTECTIVE DESIGN. 5-6

5-10 APPLICATION OF DYNAMIC ANALYSIS. 5-7

5-11 GENERAL. 5-7

5-12 MECHANICAL PROPERTIES. 5-8

5-12.1 Mechanical Properties Under Static Loading, Static Design Stresses. 5-8

5-12.2 Mechanical Properties Under Dynamic Loading, Dynamic Increase Factors. 5-9

5-13 RECOMMENDED DYNAMIC DESIGN STRESSES. 5-10

5-13.1 General. 5-10

5-13.2 Dynamic Design Stress for Ductility Ratio, $\mu \leq 10$. 5-10

5-13.3 Dynamic Design Stress for Ductility Ratio, $\mu > 10$. 5-11

5-13.4 Dynamic Design Stress for Shear. 5-11

5-14 PLASTIC BEHAVIOR OF STEEL STRUCTURES. 5-15

5-15 RELATIONSHIP BETWEEN STRUCTURE FUNCTION AND DEFORMATIONS. 5-16

5-15.1 General. 5-16

5-15.2 Acceptor-type Structures in the Low Pressure Ranges..... 5-16
5-15.3 Acceptor- or Donor-type Structures in the High Pressure Range. 5-16
5-16 DEFORMATION CRITERIA. 5-16
5-16.1 General. 5-16
5-16.2 Structural Response Quantities. 5-17
5-16.3 Ductility Ratio, μ. 5-17
5-16.4 Support Rotation, Θ. 5-17
5-16.5 Limiting Deformations for Beams. 5-17
5-16.6 Application of Deformation Criteria to a Frame Structure..... 5-18
5-16.7 Limiting Deformations for Plates. 5-18
5-17 REBOUND..... 5-19
5-18 SECONDARY MODES OF FAILURE..... 5-20
5-18.1 General. 5-20
5-18.2 Instability Modes of Failure. 5-20
5-18.3 Brittle Modes of Failure. 5-21
5-19 GENERAL. 5-25
5-20 DYNAMIC FLEXURAL CAPACITY..... 5-25
5-20.1 General. 5-25
5-20.2 Moment-curvature Relationship for Beams. 5-26
5-20.3 Design Plastic Moment, M_p. 5-26
5-21 RESISTANCE AND STIFFNESS FUNCTIONS..... 5-27
5-21.1 General. 5-27
5-21.2 Single-span Beams. 5-27
5-21.3 Multi-span Beams. 5-27
5-22 DESIGN FOR FLEXURE. 5-28
5-22.1 General. 5-28
5-22.2 Response Charts. 5-29
5-22.3 Preliminary Dynamic Load Factors. 5-29
5-22.4 Additional Considerations in Flexural Design..... 5-29
5-23 DESIGN FOR SHEAR. 5-29
5-24 LOCAL BUCKLING. 5-30

5-25 WEB CRIPPLING. 5-32
5-26 LATERAL BRACING. 5-32
5-26.1 General. 5-32
5-26.2 Requirements for Members with $\mu \leq 3$. 5-32
5-26.3 Requirements for Members with $\mu > 3$. 5-33
5-26.4 Requirements for Elements Subjected to Rebound. 5-34
5-26.5 Requirements for Bracing Members. 5-34
5-27 GENERAL. 5-38
5-28 DYNAMIC FLEXURAL CAPACITY. 5-38
5-29 RESISTANCE AND STIFFNESS FUNCTIONS. 5-38
5-30 DESIGN FOR FLEXURE. 5-39
5-31 DESIGN FOR SHEAR. 5-39
5-32 UNSYMMETRICAL BENDING. 5-40
5-32.1 General. 5-40
5-32.2 Elastic and Plastic Section Modulus. 5-41
5-32.3 Equivalent Elastic Stiffness. 5-42
5-32.4 Lateral Bracing and Recommended Design Criteria. 5-42
5-32.5 Torsion and Unsymmetrical Bending. 5-42
5-33 STEEL JOISTS AND JOIST GIRDERS (OPEN-WEB STEEL JOISTS). 5-43
5-34 BLAST RESISTANT DESIGN OF COLD-FORMED STEEL PANELS. 5-44
5-34.1 General. 5-44
5-34.2 Resistance in Flexure. 5-44
5-34.3 Equivalent Elastic Deflection. 5-46
5-34.4 Design for Flexure. 5-47
5-34.5 Recommended Ductility Ratios. 5-47
5-34.6 Recommended Support Rotations. 5-48
5-34.7 Rebound. 5-48
5-34.8 Resistance in Shear. 5-48
5-34.9 Web Crippling. 5-49
5-35 SUMMARY OF DEFORMATION CRITERIA FOR STRUCTURAL ELEMENTS. 5-51
5-36 BLAST DOOR DESIGN. 5-61

5-36.1 General. 5-61
5-36.2 Functions and Methods of Opening. 5-61
5-36.3 Design Considerations. 5-61
5-36.4 Examples of Blast Door Designs. 5-63
5-36.5 Blast Door Rebound. 5-64
5-36.6 Methods of Design. 5-65
5-37 PLASTIC DESIGN CRITERIA. 5-71
5-37.1 General. 5-71
5-37.2 In-plane Loads. 5-71
5-37.3 Combined Axial Loads and Biaxial Bending. 5-71
5-38 EFFECTIVE LENGTH RATIOS FOR BEAM-COLUMNS. 5-72
5-39 EFFECTIVE LENGTH FACTOR, *K*. 5-73
5-40 GENERAL. 5-75
5-41 TRIAL DESIGN OF SINGLE-STORY RIGID FRAMES. 5-76
5-41.1 Collapse Mechanisms. 5-76
5-41.2 Dynamic Deflections and Rotations. 5-77
5-41.3 Dynamic Load Factors. 5-77
5-41.4 Loads in Frame Members. 5-77
5-41.5 Sizing of Frame Members. 5-77
5-41.6 Stiffness and Deflection. 5-78
5-42 TRIAL DESIGN OF SINGLE-STORY FRAMES WITH SUPPLEMENTARY BRACING. 5-79
5-42.1 General. 5-79
5-42.2 Collapse Mechanisms. 5-79
5-42.3 Bracing Ductility Ratio. 5-80
5-42.4 Dynamic Load Factor. 5-80
5-42.5 Loads in Frame Members. 5-80
5-42.6 Stiffness and Deflection. 5-81
5-42.7 Slenderness Requirements for Diagonal Braces. 5-82
5-42.8 Sizing of Frame Members. 5-82
5-43 GENERAL. 5-90
5-44 TYPES OF CONNECTIONS. 5-90

5-45 REQUIREMENTS FOR MAIN FRAMING CONNECTIONS. 5-91
5-46 DESIGN OF CONNECTIONS. 5-91
5-47 DYNAMIC DESIGN STRESSES FOR CONNECTIONS. 5-92
5-48 REQUIREMENTS FOR FLOOR AND WALL PANEL CONNECTIONS. 5-93
5-49 PENETRATION OF FRAGMENTS INTO STEEL. 5-96
5-49.1 Failure Mechanisms. 5-96
5-49.2 Primary Fragment Penetration Equations. 5-96
5-49.3 Residual Velocity After Perforation of Steel Plate. 5-97
5-50 GENERAL. 5-101
5-51 STEEL FRAMED BUILDINGS. 5-101
5-52 COLD-FORMED, LIGHT GAGE STEEL PANELS. 5-101
5-53 BLAST DOORS. 5-102

CHAPTER 5 STRUCTURAL STEEL DESIGN: FIGURES

Figure 5-1 Typical Stress-Strain Curves for Steel 5-12
Figure 5-2 Dynamic Increase Factors for Yield Stresses At Various Strain Rates for ASTM A-36 and A-514 Steels 5-13
Figure 5-3 Member End Rotations for Beams and Frames 5-22
Figure 5-4 Relationship Between Designs Parameters for Beams 5-23
Figure 5-5 Relationship Between Design Parameters for Plates 5-24
Figure 5-6 Theoretical Stress Distribution for Pure Bending at Various Stages of Dynamic Loading 5-34
Figure 5-7 Moment-Curvature Diagram for Simple-Supported, Dynamically Loaded, I-shaped Beams 5-35
Figure 5-8 Values of β for use in Equations 5-20 and 5-21 5-36
Figure 5-9 Typical Lateral Bracing Details 5-37
Figure 5-10 Moment-Curvature Diagram for Dynamically Loaded Plates and Rectangular Cross-Section Bases 5-40
Figure 5-11 Biaxial Bending of a Doubly-Symmetric Section 5-51
Figure 5-12 Resistance-Deflection Curve for a Typical Cold-Formed Section 5-52
Figure 5-13 Elastic Rebound of Single-Degree-of-Freedom System 5-53
Figure 5-14 Allowable Dynamic (Design) Shear Stresses for Webs of Cold-Formed Members (f_{ds} = 44 ksi) 5-54
Figure 5-15 Maximum End Support Reaction for Cold-Formed Steel Sections (f_{ds} = 44 ksi) 5-55
Figure 5-16 Maximum Interior Support Reaction for Cold-Formed Steel Sections (f_{ds} = 44 ksi) 5-56
Figure 5-17 Gasket Detail for Blast Door 5-66
Figure 5-18 Built-up Double-Leaf Blast Door with Frame Built into Concrete 5-67
Figure 5-19 Horizontal Sliding Blast Door 5-67
Figure 5-20 Single-Leaf Blast Door With Fragment Shield (Very High Pressure) 5-68
Figure 5-21 Single Leaf Blast Door (High Pressure) 5-68
Figure 5-22 Bilinear Blast Load and Single-Degree-of-Freedom Response for Determining Rebound Resistance 5-69
Figure 5-23 Orientation of Roof Purlins with Respect to Blast Load Direction for Frame Blast Loading 5-83

Figure 5-24 Estimate of Peak Shears and Axial Loads in Rigid Frames Due to Horizontal Loads 5-84
Figure 5-25 Estimates of Peak Shears and Axial Loads in Braced Frames Due to Horizontal Loads 5-85
Figure 5-26 Corner Connection Behavior 5-94
Figure 5-27 Typical Connections for Cold-Formed Steel Panels 5-95
Figure 5-28 Steel Penetration Design Chart – AP Steel Fragments Penetrating Mild Steel Plates 5-98
Figure 5-29 Steel Penetration Design Chart – Mild Steel Fragments Penetrating Mild Steel Plates 5-99
Figure 5-30 Residual Fragment Velocity Upon Perforation of Steel Barriers 5-100
Figure 5-31 Typical Framing Plan For a Single-Story Blast-Resistant Steel Structure 5-103
Figure 5-32 Typical Framing Detail at Interior Column 2-C 5-104
Figure 5-33 Typical Framing Detail at End Column 1-C 5-105
Figure 5-34 Typical Framing Detail at Side Column 2-D 5-106
Figure 5-35 Typical Framing Detail at Corner Column 1-D 5-107
Figure 5-36 Typical Details for Cold-Formed, Light Gage Steel Paneling 5-108
Figure 5-37 Typical Welded Connections for Attaching Cold-Formed Steel Panels to Supporting Members 5-109
Figure 5-38 Typical Bolted Connections for Attaching Cold-Formed Steel Panels to Supporting Members 5-110
Figure 5-39 Details of Typical Fasteners for Cold-Formed Steel Panels 5-111
Figure 5-40 Single-Leaf Blast Door Installed in a Steel Structure 5-112
Figure 5-41 Double-Leaf Blast Door Installed in a Concrete Structure 5-113
Figure 5-42 Compression-Arch and Tension-Arch Blast Doors 5-114

CHAPTER 5 STRUCTURAL STEEL DESIGN: TABLES

Table 5-1 Static Design Stresses for Materials 5-14
Table 5-2 Dynamic Increase Factor, *DIF*, for Yield Stress of Structural Steels 5-15
Table 5-3 Dynamic Increase Factor, *DIF*, for Ultimate Stress of Structural Steels 5-15
Table 5-4 Preliminary Dynamic Load Factors for Plates 5-40
Table 5-5 Dynamic Design Shear Stress for Webs of Cold-Formed Members (f_{ds} = 44 ksi) 5-57
Table 5-6 Dynamic Design Shear Stress for Webs of Cold-Formed Members (f_{ds} = 66 ksi) 5-58
Table 5-7 Dynamic Design Shear Stress for Webs of Cold-Formed Members (f_{ds} = 88 ksi) 5-59
Table 5-8 Summary of Deformation Criteria 5-60
Table 5-9 Design Requirements for Sample Blast Doors 5-70
Table 5-10 Effective Length Ratios for Beam Columns (Webs of members in the plane of the frame; i.e., bending about the strong axis) 5-73
Table 5-11 Effective Length Ratios for Beam Columns (Flanges of members in the plane of the frame: i.e., bending about the weak axis) 5-73
Table 5-12 Effective Length Factors for Columns and Beam-Columns 5-74
Table 5-13 Collapse Mechanisms for Rigid Frames with Fixed and Pinned Bases 5-86
Table 5-14 Stiffness Factors for Single Story, Multi-Bay Rigid Frames Subjected to Uniform Horizontal Loading 5-87
Table 5-15 Collapse Mechanisms for Rigid Frames with Supplementary Bracing and Pinned Bases 5-88
Table 5-16 Collapse Mechanisms for Frames with Supplementary Bracing, Nonrigid Girder-to-Column Connections and Pinned Bases. 5-89

CHAPTER 5 STRUCTURAL STEEL DESIGN

INTRODUCTION

5-1 PURPOSE.

The purpose of this manual is to present methods of design for protective construction used in facilities for development, testing, production, storage, maintenance, modification, inspection, demilitarization, and disposal of explosive materials.

5-2 OBJECTIVE.

The primary objectives are to establish design procedures and construction techniques whereby propagation of explosion (from one structure or part of a structure to another) or mass detonation can be prevented and to provide protection for personnel and valuable equipment.

The secondary objectives are to:

(1) Establish the blast load parameters required for design of protective structures.

(2) Provide methods for calculating the dynamic response of structural elements including reinforced concrete, and structural steel.

(3) Establish construction details and procedures necessary to afford the required strength to resist the applied blast loads.

(4) Establish guidelines for siting explosive facilities to obtain maximum cost effectiveness in both the planning and structural arrangements, providing closures, and preventing damage to interior portions of structures because of structural motion, shock, and fragment perforation.

5-3 BACKGROUND.

For the first 60 years of the 20th century, criteria and methods based upon results of catastrophic events were used for the design of explosive facilities. The criteria and methods did not include a detailed or reliable quantitative basis for assessing the degree of protection afforded by the protective facility. In the late 1960's quantitative procedures were set forth in the first edition of the present manual, "Structures to Resist the Effects of Accidental Explosions." This manual was based on extensive research and development programs which permitted a more reliable approach to current and future design requirements. Since the original publication of this manual, more extensive testing and development programs have taken place. This additional research included work with materials other than reinforced concrete which was the principal construction material referenced in the initial version of the manual.

Modern methods for the manufacture and storage of explosive materials, which include many exotic chemicals, fuels, and propellants, require less space for a given quantity of explosive material than was previously needed. Such concentration of explosives increases the possibility of the propagation of accidental explosions (one accidental explosion causing the detonation of other explosive materials). It is evident that a requirement for more accurate design techniques is essential. This manual describes rational design methods to provide the required structural protection.

These design methods account for the close-in effects of a detonation including the high pressures and the nonuniformity of blast loading on protective structures or barriers. These methods also account for intermediate and far-range effects for the design of structures located away from the explosion. The dynamic response of structures, constructed of various materials, or combination of materials, can be calculated, and details are given to provide the strength and ductility required by the design. The design approach is directed primarily toward protective structures subjected to the effects of a high explosive detonation. However, this approach is general, and it is applicable to the design of other explosive environments as well as other explosive materials as mentioned above.

The design techniques set forth in this manual are based upon the results of numerous full- and small-scale structural response and explosive effects tests of various materials conducted in conjunction with the development of this manual and/or related projects.

5-4 SCOPE.

It is not the intent of this manual to establish safety criteria. Applicable documents should be consulted for this purpose. Response predictions for personnel and equipment are included for information.

In this manual an effort is made to cover the more probable design situations. However, sufficient general information on protective design techniques has been included in order that application of the basic theory can be made to situations other than those which were fully considered.

This manual is applicable to the design of protective structures subjected to the effects associated with high explosive detonations. For these design situations, the manual will apply for explosive quantities less than 25,000 pounds for close-in effects. However, this manual is also applicable to other situations such as far- or intermediate-range effects. For these latter cases the design procedures were originally developed for explosive quantities in the order of 500,000 pounds which is the maximum quantity of high explosive approved for aboveground storage facilities in the Department of Defense manual, "DoD Ammunition and Explosives Safety Standards," DOD 6055.09-M. **1**\ However, DOD 6055.09-M currently addresses explosive quantities of up to 5,000,000 lbs, and the design procedures in this document have been extrapolated for designs to resist accidental explosions on ships of 5,000,000 lbs or more. Although some disasters have involved very high explosive quantities (such as Port Chicago in 1944 which involved around 10,000,000 pounds of explosives), limited testing has been

completed at such high quantities (e.g. the Middle North Series used 1,000,000 lbs TNT, and the Minor Scale and Misty Picture used the equivalent of 8,000,000 lbs TNT). /**1**/ Since tests were primarily directed toward the response of structural steel and reinforced concrete elements to blast overpressures, this manual concentrates on design procedures and techniques for these materials. However, this does not imply that concrete and steel are the only useful materials for protective construction. Tests to establish the response of wood, brick blocks, and plastics, as well as the blast attenuating and mass effects of soil are contemplated. The results of these tests may require, at a later date, the supplementation of these design methods for these and other materials.

Other manuals are available to design protective structures against the effects of high explosive or nuclear detonations. The procedures in these manuals will quite often complement this manual and should be consulted for specific applications.

Computer programs, which are consistent with procedures and techniques contained in the manual, have been approved by the appropriate representative of the US Army, the US Navy, the US Air Force and the Department of Defense Explosives Safety Board (DDESB). These programs are available through the following repositories:

(1) Department of the Army
Commander and Director
U.S. Army Engineer Research and Development Center
Post Office Box 631
Vicksburg, Mississippi 39180-0631
Attn: WESKA

(2) Department of the Navy
Commanding Officer
Naval Facilities Engineering and Expeditionary Warfare Center
1000 23rd Avenue
Port Hueneme, California 93043
Attn: Code CI7

(3) Department of the Air Force
Aerospace Structures
Information and Analysis Center
Wright Patterson Air Force Base
Ohio 45433
Attn: AFFDL/FBR

If any modifications to these programs are required, they will be submitted for review by DDESB and the above services. Upon concurrence of the revisions, the necessary changes will be made and notification of the changes will be made by the individual repositories.

5-5 FORMAT.

This manual is subdivided into six specific chapters dealing with various aspects of design. The titles of these chapters are as follows:

Chapter 1 Introduction

Chapter 2 Blast, Fragment, and Shock Loads

Chapter 3 Principles of Dynamic Analysis

Chapter 4 Reinforced Concrete Design

Chapter 5 Structural Steel Design

Chapter 6 Special Considerations in Explosive Facility Design

When applicable, illustrative examples are included in the Appendices.

Commonly accepted symbols are used as much as possible. However, protective design involves many different scientific and engineering fields, and, therefore, no attempt is made to standardize completely all the symbols used. Each symbol is defined where it is first used, and in the list of symbols at the end of each chapter.

5-6 CHAPTER CONTENTS.

This chapter contains procedures and guidelines for the design of blast-resistant steel structures and steel elements. Light construction and steel framed acceptor structures provide an adequate form of protection in a pressure range of 10 psi or less. However, if fragments are present, light-gage construction may only be partially appropriate. The use of structural steel frames in combination with precast concrete roof and wall panels (Chapter 6) will provide a measure of fragment protection at lower pressure ranges. Containment structures or steel elements of containment structures, such as blast doors, ventilation closures, fragments shields, etc. can be designed for almost any pressure range. This chapter covers detailed procedures and design techniques for the blast-resistant design of steel elements and structures subjected to short-duration, high-intensity blast loading. Provisions for inelastic, blast-resistant design will be consistent with conventional static plastic design procedures. Steel elements such as beams, beam columns, open-web joists, plates and cold-formed steel panels are considered. In addition, the design of steel structures such as rigid frames, and braced frames are presented as they relate to blast-resistant design. Special considerations for blast doors, penetration of fragments into steel, and unsymmetrical bending are also presented.

STEEL STRUCTURES IN PROTECTIVE DESIGN

5-7 DIFFERENCES BETWEEN STEEL AND CONCRETE STRUCTURES IN PROTECTIVE DESIGN

Qualitative differences between steel and concrete protective structures are summarized below:

(1) In close-in high-impulse design situations where a containment structure is utilized, a massive reinforced concrete structure, rather than a steel structure, is generally employed in order to limit deflections and to offer protection against the effects of primary and secondary fragments. However, elements of containment structures such as blast doors, ventilation closures, etc., are generally designed using structural steel. Fragment protection is usually accomplished by increasing the element thickness to resist fragment penetration or by providing supplementary fragment protection. In some cases, structural steel can be used in the design of containment cells. However, explosive charge weights are generally low; thereby preventing brittle modes of failure (Section 5-18.3) due to high pressure intensity.

(2) Structural steel shapes are considerably more slender, both in terms of the overall structure and the components of a typical member cross section. As a result, the effect of overall and local instability upon the ultimate capacity is an important consideration in steel design. Moreover, in most cases, plate elements and structures will sustain large deformations in comparison to those of more rigid concrete elements.

(3) The amount of rebound in concrete structures is considerably reduced by internal damping (cracking) and is essentially eliminated in cases where large deformations or incipient failure are permitted to occur. In structural steel, however, a larger response in rebound, up to 100 percent, can be obtained for a combination of short duration load and a relatively flexible element. As a result, steel structures require that special provisions be made to account for extreme responses of comparable magnitude in both directions.

(4) The treatment of stress interaction is more of a consideration in steel shapes since each element of the cross section must be considered subject to a state of combined stresses. In reinforced concrete, the provision of separate steel reinforcement for flexure, shear and torsion enables the designer to consider these stresses as being carried by more or less independent systems.

(5) Special care must be taken in steel design to provide for connection integrity up to the point of maximum response. For example, in order to avoid premature brittle fracture in welded connections, the welding characteristics of the particular grade of steel must be considered and the introduction of any stress concentrations at joints and notches in main elements must be avoided.

(6) If fragments are involved, special care must be given to brittle modes of failure as they affect construction methods. For example, fragment penetration depth may govern the thickness of a steel plate.

5-8 ECONOMY OF DESIGN OF PROTECTIVE STRUCTURES IN THE INELASTIC RANGE.

The economy of facility design generally requires that blast-resistant structures be designed to perform in the inelastic response range during an accident. In order to ensure the structure's integrity throughout such severe conditions, the facility designer must be cognizant of the various possible failure modes and their inter-relationships. The limiting design values are dictated by the attainment of inelastic deflections and rotations without complete collapse. The amount of inelastic deformation is dependent not only upon the ductility characteristics of the material, but also upon the intended use of the structure following an accident as well as the protection required. In order for the structure to maintain such large deformations, steps must be taken to prevent premature failure by either brittle fracture or instability (local or overall). Guidelines and criteria for dealing with these effects are presented in the body of this chapter.

5-9 APPLICATIONS OF STEEL ELEMENTS AND STRUCTURES IN PROTECTIVE DESIGN.

The design procedures and applications of this chapter are directed toward steel acceptor- and donor-type structures.

Acceptor-type structures are removed from the immediate vicinity of the detonation. These include typical frame structures with beams, columns and beam-columns composed of standard structural shapes, and built-up sections. In many cases, the relatively low blast pressures suggest the use of standard building components such as open-web joists, prefabricated wall panels and roof decking detailed as required to carry the full magnitude of the dynamic loads. Another economical application can be the use of entire pre-engineered buildings, strengthened locally, to adapt their designs to low blast pressures (up to 2 psi) with short duration. For guidelines on the blast evaluation of pre- engineered buildings, see "Special Provisions for Pre-engineered Buildings", Chapter 6.

Donor-type structures, which are located in the immediate vicinity of the detonation may include steel containment cells or steel components of reinforced concrete containment structures such as blast doors or ventilation and electrical closure plates. In some cases, the use of suppressive shielding to control or confine the hazardous blast, fragment, and flame effects of detonations may be an economically feasible alternative. A brief review of suppressive shield design and criteria is outlined in Section 6-23 to 6-26 of Chapter 6. The high blast pressures encountered in these structures suggest the use of large plates or built-up sections with relatively high resistances. In some instances, fragment impact or pressure leakage is permitted.

5-10 APPLICATION OF DYNAMIC ANALYSIS.

The first step in a dynamic design entails the development of a trial design considering facility requirements, available materials, and economy with members sized by a simple preliminary procedure. The next step involves the performance of a dynamic analysis to determine the response of the trial design to the blast and the comparison of the maximum response with the deformation limits specified in this chapter. The final design is then determined by achieving an economical balance between stiffness and resistance such that the calculated response under the blast loading lies within the limiting values dictated by the operational requirements of the facility.

The dynamic response calculation involves either a single-degree-of-freedom analysis using the response charts in Chapter 3, or, in more complex structures, a multi-degree-of-freedom analysis using available dynamic elasto-plastic frame programs.

A single-degree-of-freedom analysis may be performed for the design analysis of either a given structural element or of an element for which a preliminary design has been performed according to procedures given in this chapter. Since this type of dynamic analysis is described fully with accompanying charts and tables in Chapter 3, it will not be duplicated herein. In principle, the structure or structural element is characterized by an idealized, bilinear, elasto-plastic resistance function and the loading is treated as an idealized triangular (or bilinear) pulse with zero rise time (Chapter 3). Response charts are presented in Chapter 3 for determining the ratio of the maximum response to the elastic response and the time to reach maximum response for the initial response. The equations presented for the dynamic reactions are also applicable to this chapter.

Multi-degree-of-freedom, nonlinear dynamic analyses of braced and unbraced rigid frames can be performed using computer models that have been validated for the full range of dynamic loading and response to which the frame may be exposed. The computer model must incorporate adequate fidelity to represent steel frame structures. Full documentation of key modeling assumptions is required and an assessment of model accuracy versus test data shall be provided. If this is a computer model that it is not widely accepted for the application being used, the implementation of the computer code must be independently verified.

PROPERTIES OF STRUCTURAL STEEL

5-11 GENERAL.

Structural steel is known to be a strong and ductile building material. The significant engineering properties of steel are strength expressed in terms of yield stress and ultimate tensile strength, ductility expressed in terms of percent elongation at rupture, and rigidity expressed in terms of modulus of elasticity. This section covers the mechanical properties of structural steel subjected to static loading and dynamic loading. Recommended dynamic design stresses for bending and shear are then derived. Structural steels that are admissible in plastic design are listed.

5-12 MECHANICAL PROPERTIES.

5-12.1 Mechanical Properties Under Static Loading, Static Design Stresses.

Structural steel generally can be considered as exhibiting a linear stress-strain relationship up to the proportional limit, which is either close to or identical to the yield point. Beyond the yield point, it can stretch substantially without appreciable increase in stress, the amount of elongation reaching 10 to 15 times that needed to reach yield, a range that is termed "the yield plateau." Beyond that range, strain hardening occurs, i.e., additional elongation is associated with an increase in stress. After reaching a maximum nominal stress called "the tensile strength" a drop in the nominal stress accompanies further elongation and precedes fracture at an elongation (at rupture) amounting to 20 to 30 percent of the specimen's original length (see Figure 5-1 (+)). It is this ability of structural steel to undergo sizable permanent (plastic) deformations before fracturing, i.e., its ductility, that makes steel a construction material with the required properties for blast resistant design.

Some high strength structural steels do not exhibit a sharp, well defined yield plateau, but rather show continuous yielding with a curved stress-strain relation. For those steels, it is generally accepted to define a quantity analogous to the yield point, called "the yield stress", which is equal to the stress producing a permanent strain of 0.2 percent or a total unit elongation of 0.4 to 0.5 percent. Although such steels usually have a higher yield stress than those steels which exhibit definite yield and tensile stresses, their elongation at rupture is generally smaller. Therefore, they should be used with caution when large ductilities are a prerequisite of design.

Blast-resistant design is commonly associated with plastic design since protective structures are generally designed with the assumption that economy can be achieved when plastic deformations are permitted. The steels to be used should at least meet the requirements of the American Institute of Steel Construction (AISC) Specification in regard to the adequacy for plastic design.

Since the average yield stress for structural steels having a specified minimum yield stress of 50 ksi or less is generally higher than the specified minimum, it is recommended that the minimum design yield stress, as specified by the AISC specification, be increased by 10 percent. That is, the average yield stress to be used in a blast resistant design shall be 1.1 times the minimum yield stress for these steels. This increase, which is referred to as the strength increase factor (SIF), should not be applied to high strength steels since the average increase may be less than 5 percent.

The minimum yield stress, f_y, and the tensile stress, f_u, (minimum) for structural steel shapes and plates which conform to the American Society for Testing and Materials (ASTM) Specification are listed in Table 5-1 (+). All are admissible in plastic design except for ASTM A514, which exhibits the smallest reserve in ductility since the minimum tensile stress is only 10 percent higher than the minimum yield stress. However, elastic dynamic design may require the use of this steel or its boiler plate equivalent, as in ASTM A517.

5-12.2 Mechanical Properties Under Dynamic Loading, Dynamic Increase Factors.

The effects of rapid loading on the mechanical behavior of structural steel have been observed and measured in uniaxial tensile stress tests. Under rapidly applied loads, the rate of strain increases and this has a marked influence on the mechanical properties of structural steel.

Considering the mechanical properties under static loading as a basis, the effects of increasing strain rates are illustrated in Figure 5-1 (+) and can be summarized as follows:

(1) The yield point increases substantially to the dynamic yield stress value. This effect is termed the dynamic increase factor for yield stress.

(2) The modulus of elasticity in general will remain insensitive to the rate of loading.

(3) The ultimate tensile strength increases slightly. However, the percentage increase is less than that for the yield stress. This effect is termed the dynamic increase factor for ultimate stress.

(4) The elongation at rupture either remains unchanged or is slightly reduced due to increased strain rate.

In actual members subjected to blast loading, the dynamic effects resulting from the rapid strain rates may be expressed as a function of the time to reach yielding. In this case, the mechanical behavior depends on both the loading regime and the response of the system which determines the dynamic effect felt by the particular material.

For members made of ASTM A36 and A514 steels, studies have been made to determine the percentage increase in the yield stress as a function of strain rate. Design curves for the dynamic increase factors (*DIF*) for yield stresses of A36 and A514 structural steel are illustrated in Figure 5-2 (+). These curves may be applied to structural steel that has a yield stress of 90 ksi or less. Even though ASTM A514 is not recommended for plastic design, the curve in Figure 5-2 may be used for dynamic elastic design.

The strain rate, assumed to be a constant from zero strain to yielding, may be determined according to Equation 5-1:

$$\dot{\varepsilon} = f_{ds} / E_s t_E \qquad \text{Eq 5-1}$$

where

$\dot{\varepsilon}$ = *average strain rate in the elastic range of the steel (in/in/sec)*
t_E = *time to yield (sec)*
f_{ds} = *dynamic design stress (Section 5-13)*

For elements designed to remain in the elastic range under blast loading, the strain rate may be calculated using the maximum deflection and the time at which maximum deflection occurs, t_m, instead of the time to yield, t_E. Dynamic increase factors for yield stresses in various pressure levels in the bending, tension, and compression modes are listed in Table 5-2 (+). The values for bending assume a strain rate of 0.10 in/in/sec in the low design pressure range and 0.30 in/in/sec in the high pressure design range. For tension and compression members, the DIF values assume the strain rates are 0.02 in/in/sec in the low design pressure range and 0.05 in/in/sec in the high design pressure range. Lower strain rates are selected for the tension and compression members since they are likely to carry the reaction of a beam or girder which may exhibit a significant rise time, thereby increasing the time to reach yield in the tension or compression mode.

On the basis of the above, the dynamic increase factors for yield stresses summarized in Table 5-2 (+) are recommended for use in dynamic design. However, a more accurate representation may be derived using Figure 5-2 (+) once the strain rate has been determined.

Steel protective structures and members are generally not designed for excessive deflections, that is, deflections associated with elongations well into the strain-hardening region (see Figure 5-1 (+)). However, situations arise where excessive deflections may be tolerated and will not lead to structural failure or collapse. In this case, the ultimate stresses and associated dynamic increase factors for ultimate stresses must be considered. Table 5-3 (+) lists the dynamic increase factors for ultimate stresses of steels. Unlike the dynamic increase factors for yield stress, these values are independent of the pressure ranges.

5-13 RECOMMENDED DYNAMIC DESIGN STRESSES.

5-13.1 General.

The yield point of steel under uniaxial tensile stress is generally used as a base to determine yield stresses under other loading states namely, bending, shear and compression, or tension. The design stresses are also functions of the average strength increase factor, *SIF*, and the dynamic increase factor, *DIF*.

5-13.2 Dynamic Design Stress for Ductility Ratio, $\mu \leq 10$.

To determine the plastic strength of a section under dynamic loading, the appropriate dynamic yield stress, f_{dy}, must be used. For a ductility ratio (see Section 5-16.3) $\mu \leq 10$, the dynamic design stress, f_{ds}, is equal to the dynamic yield stress, f_{dy}. In general terms, the dynamic yield stress, f_{dy}, shall be equal to the product of the dynamic increase

factor, *DIF*, the average yield strength increase factor, *SIF*, (see Section 5-12.1) and the specified minimum yield stress of the steel. The dynamic design stress, f_{ds}, for bending, tension, and compression shall be:

$$f_{ds} = f_{dy} = DIF \times SIF \times f_y \qquad (5\text{-}2)$$

where

f_{dy} = *dynamic yield stress*
DIF = *dynamic increase factor on the yield stress (Figure 5-2 (+) or Table 5-2 (+))*
SIF = *average strength increase factor (= 1.1 for steels with a specified minimum yield stress of 50 ksi or less; = 1.0 otherwise)*
f_y = *static yield stress from Table 5-1 (+)*

5-13.3 Dynamic Design Stress for Ductility Ratio, $\mu > 10$.

Where excessive deflections or ductility ratios may be tolerated, the dynamic design stress can be increased to account for deformations in the strain hardening region. In this case, for $\mu > 10$, the dynamic design stress, f_{ds}, becomes

$$f_{ds} = f_{dy} + (f_{du} - f_{dy})/4 \qquad (5\text{-}3)$$

where:

f_{dy} = *dynamic yield stress from Equation 5-2*
f_{du} = *dynamic ultimate stress equal to the product of f_u from Table 5-1 (+) and the value of c from Table 5-3 (+) or Figure 5-2 (+)*

It should be noted that the average strength increase factor, *SIF*, does not apply to f_{du}.

5-13.4 Dynamic Design Stress for Shear.

The dynamic design stress for shear shall be:

$$f_{dv} = 0.55\, f_{ds} \qquad (5\text{-}4)$$

where f_{ds} is from Equation 5-2 or 5-3.

Figure 5-1 Typical Stress-Strain Curves for Steel

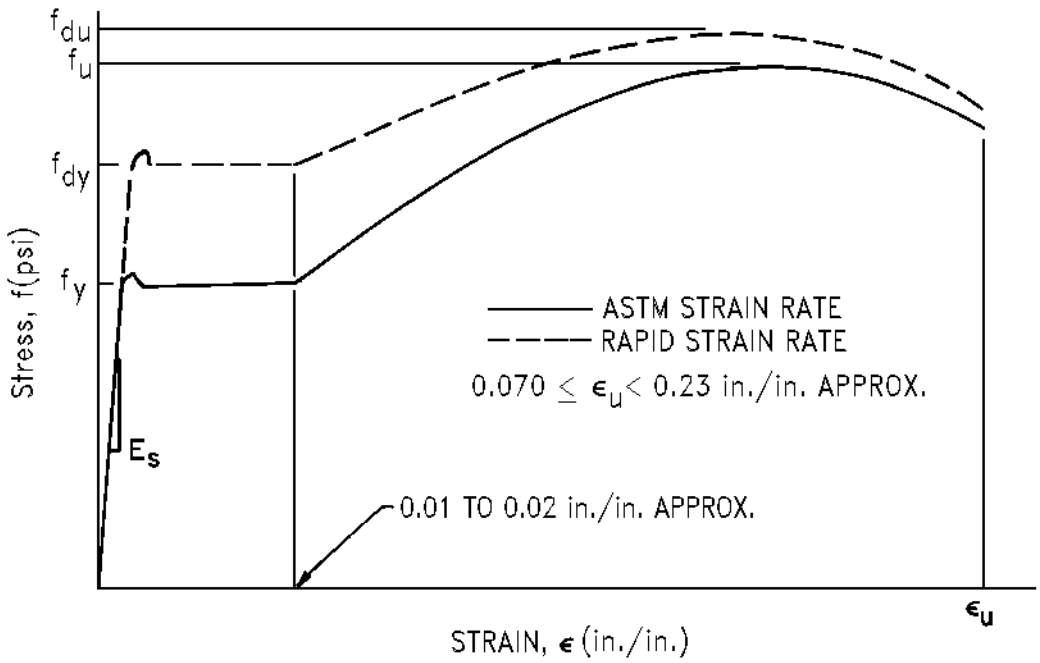

Figure 5-2 Dynamic Increase Factors for Yield Stresses At Various Strain Rates for ASTM A-36 and A-514 Steels

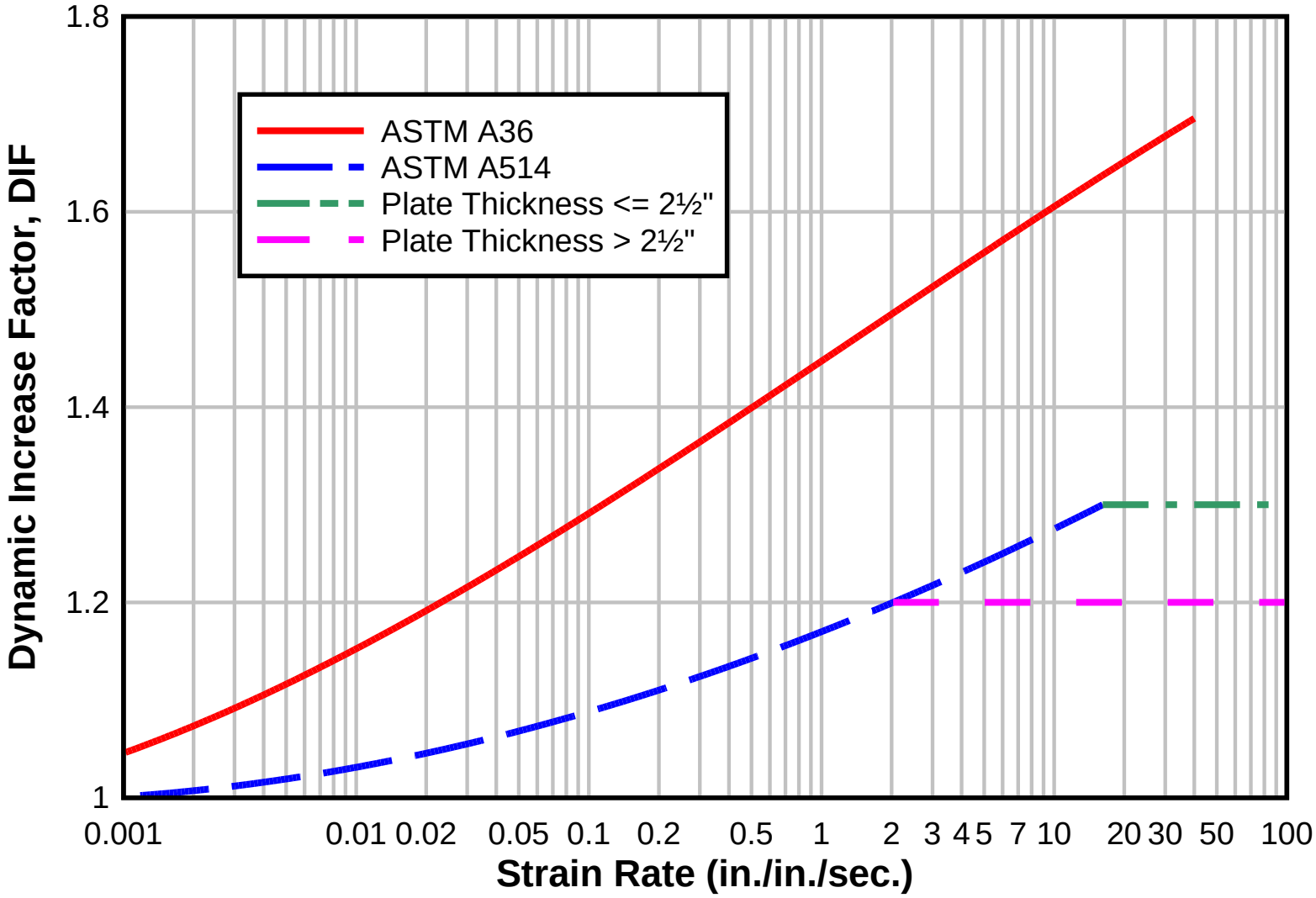

Table 5-1 Static Design Stresses for Materials

Material (ASTM)	f_y min (ksi)	f_u min (ksi)
A36	36	58
A529	42	60
A441	40	60
	42	63
	46	67
	50	70
A572	42	60
	50	65
	60	75
	65	80
A242	42	63
	46	67
	50	70
A588	42	63
	46	67
	50	70
A514	90	100
	100	110

Table 5-2 Dynamic Increase Factor, *DIF*, for Yield Stress of Structural Steels

Material	Bending		Tension or Compression	
	Low Pressure $(\dot{\varepsilon} = 0.10 \text{ in/in/sec})$	High Pressure $(\dot{\varepsilon} = 0.30)$	Low Pressure $(\dot{\varepsilon} = 0.02)$	High Pressure $(\dot{\varepsilon} = 0.05)$
A36	1.29	1.36	1.19	1.24
A588	1.19*	1.24*	1.12*	1.15*
A514	1.09	1.12	1.05	1.07

*Estimated

Table 5-3 Dynamic Increase Factor, *DIF*, for Ultimate Stress of Structural Steels

Material	*c*
A36	1.10
A588	1.05*
A514	1.00

*Estimated

DYNAMIC RESPONSE OF STEEL STRUCTURES IN THE PLASTIC RANGE

5-14 PLASTIC BEHAVIOR OF STEEL STRUCTURES.

Although plastic behavior is not generally permissible under service loading conditions, it is quite appropriate for design when the structure is subjected to a severe blast loading only once or at most a few times during its existence. Under blast pressures, it will usually be uneconomical to design a structure to remain elastic and, as a result, plastic behavior is normally anticipated in order to utilize more fully the energy-absorbing capacity of blast-resistant structures. Plastic design for flexure is based on the assumption that the structure or member resistance is fully developed with the formation of near totally plastified sections at the most highly stressed locations. For economical design, the structure should be proportioned to assure its ductile behavior up to the limit of its load-carrying capacity. The structure or structural element can attain its full plastic capacity provided that premature impairment of strength due to secondary effects, such as brittle fracture or instability, does not occur.

Structural resistance is determined on the basis of plastic design concepts, taking into account dynamic yield strength values. The design proceeds with the basic objective that the computed deformations of either the individual members or the structure as a

whole, due to the anticipated blast loading, should be limited to prescribed maximum values consistent with safety and the desired post accident condition.

5-15 RELATIONSHIP BETWEEN STRUCTURE FUNCTION AND DEFORMATIONS.

5-15.1 General.

Deformation criteria are specified in detail for two categories of structures, namely, acceptor-type structures in the low pressure range and structures in the high pressure range which may either be acceptor or donor-type. A description of the two categories of structures follow.

5-15.2 Acceptor-type Structures in the Low Pressure Ranges.

The maximum deformations to be specified in this category are consistent with maintaining structural integrity into the plastic range while providing safety for personnel and equipment. The type of structure generally associated with this design category may be constructed of one or two stories with braced or rigid frames. Main members consisting of columns and main beams should be fabricated from hot rolled steel while secondary members, consisting of purlins or girts which span the frame members, can be hot-rolled I-shapes and channels or cold-formed Z-shapes and channels. The structure skin shall consist of cold-formed siding and decking spanning between the wall girts or roof purlins.

5-15.3 Acceptor- or Donor-type Structures in the High Pressure Range.

The deformation criteria specified in this category cover the severe conditions associated with structures located close-in to a blast. In cases where the design objective is the containment of an explosion the deformations should be limited. In other cases where prevention of explosion propagation or of missile generation is required, the structure may be allowed to approach incipient failure, and deformations well into the strain hardening region may be permitted for energy absorption. In general, plate elements and curved plate-type structures fall under these categories.

5-16 DEFORMATION CRITERIA.

5-16.1 General.

The deformation criteria presented in this chapter will be consistent with designing the structure for one accident. However, if it is desirable for a structure to sustain two or three "incidents" in its lifetime, the designer may limit design deformations so that, in its post accident condition, the structure is suitable for repair and reuse.

The deformation criteria for beams (including purlins, spandrels and girts) are presented in Section 5-16.5. The criteria for frames, including sidesway, are presented in Section 5-16.6 and that for plates are given in Section 5-16.7. Special consideration is given to the deformation criteria for open-web joists (Section 5-33) and cold-formed metal decking (Section 5-34). Deformation criteria are summarized in Section 5-35.

5-16.2 Structural Response Quantities.

In order to restrict damage to a structure or element which is subjected to the effects of accidental explosion, limiting values must be assigned to appropriate response quantities. Generally speaking, two different types of values are specified, namely, limits on the level of inelastic dynamic response and limits on the maximum deflections and rotations.

For elements which can be represented as single-degree-of-freedom systems such as beams, floor and wall panels, open-web joists, and plates, the appropriate quantities are taken as the maximum ductility ratio and the maximum rotation at an end support.

For systems such as frame structures which can be represented by multi-degree-of-freedom systems, the appropriate quantities are taken as the sidesway deflection and individual frame member rotations.

5-16.3 Ductility Ratio, μ.

Following the development in Chapter 3 of this manual, the ductility ratio, μ, is defined as the ratio of the maximum deflection (X_m) to the equivalent elastic deflection (X_E) corresponding to the development of the limiting resistance on the bilinear resistance diagram for the element. Thus, a ductility ratio of 3 corresponds to a maximum dynamic response three times the equivalent elastic response.

In the case of individual beam elements, ductility ratios as high as 20 can be achieved provided that sufficient bracing exists. Subsequent sections of this chapter cover bracing requirements for beam elements. In the case of plate elements, ductility ratios are important insomuch as the higher ductility ratios permit the use of higher design stresses.

Support rotations, as discussed in the next section, provide the basis for beam and plate design. For a beam element, the ductility ratio must be checked to determine whether the specified rotation can be reached without premature buckling of the member. A similar provision shall apply to plates even though they may undergo larger ductility ratios in the absence of premature buckling.

5-16.4 Support Rotation, Θ.

The end rotation, Θ, and the associated maximum deflection, X_m, for a beam are illustrated in Figure 5-3 (+). As shown, Θ is the angle between the chord joining the supports and the point on the element where the deflection is a maximum.

5-16.5 Limiting Deformations for Beams.

A steel beam element may be designed to attain large deflections corresponding to 12 degrees support rotation. To assure the integrity of the beam element, it must be adequately braced to permit this high level of ductile behavior. In no case, however, shall the ductility ratio exceed 20.

A limiting support rotation of 2 degrees, and a limiting ductility ratio of 10 (whichever governs) are specified as reasonable estimates of the absolute magnitude of the beam deformation where safety for personnel and equipment is required. These deformations are consistent with maintaining structural integrity into the plastic range. Adequate bracing shall be present to assure the corresponding level of ductile behavior.

The interrelationship between the various parameters involved in the design of beams is readily described in the idealized resistance-deflection curve shown in Figure 5-4 (+). In the figure, the values shown for the ductility ratio, μ, and the support rotation Θ, are arbitrary. For example, the deflection corresponding to a 2-degree support rotation can be greater than that corresponding to a ductility ratio of 10.

5-16.6 Application of Deformation Criteria to a Frame Structure.

In the detailed analysis of a frame structure, representation of the response by a single quantity is not possible. This fact combined with the wide range and time-varying nature of the end conditions of the individual frame members makes the concept of ductility ratio intractable. Hence, for this case, the response quantities referred to in the criteria are the sidesway deflection of each story and the end rotation, Θ, of the individual members with reference to a chord joining the member ends, as illustrated in Figure 5-3 (+). In addition, in lieu of a ductility ratio criterion, the amount of inelastic deformation is restricted by means of a limitation on the individual member rotation. For members which are not loaded between their ends, such as an interior column, Θ is zero and only the sidesway criteria must be considered. The maximum member end rotation, as shown in Figure 5-3, shall be 2 degrees. The maximum sidesway deflection is limited to 1/25 of the story height.

These response quantities, sidesway deflection, and end rotation are part of the required output of various computer programs which perform an inelastic, multi-degree-of-freedom analysis of frame structures. The use of computer programs for dynamic analysis of multi-degree-of-freedom, nonlinear dynamic analyses of steel frame structures is discussed in Section 5-10. The designer can use the output of these programs to check the sidesway deflection of each story and the maximum rotation of each member.

5-16.7 Limiting Deformations for Plates.

Plates and plate-type structures can undergo large deformations with regard to support rotations and ductility ratios. The effect of overall and local instability upon the ultimate capacity is considerably more important to structural steel shapes than to plates. Depending upon the functional requirements for a plate, the following deformation criteria should be considered in the design of a plate:

(1) Large deflections at or close to incipient failure.

(2) Moderate deflections where the structure is designed to sustain two or three "incidents" before being nonreusable.

(3) Limited deflections where performance of the structure is critical during the blast as in the case of a blast door designed to contain pressure and/or fire leakage.

(4) Elastic deflections where the structure must not sustain permanent deflections, as in the case of an explosives test chamber.

This is a partial list of design considerations for plates. It can be seen that the designer must establish deformation criteria based on the function of the plate or plate system.

A plate or plate-type structure may undergo a support rotation, as illustrated in Figure 3-22 (+) of Chapter 3, of 12 degrees. The corresponding allowable ductility ratio shall not exceed 20. It should be noted that higher design stresses can be utilized when the ductility ratio exceeds 10 (See Section 5-13.3).

A limiting support rotation of 2 degrees is specified as a reasonable estimate of the absolute magnitude of the plate support rotation where safety for personnel and equipment in an acceptor-type structure is required. As in the deformation criteria for beams, the ductility ratio shall not exceed 10.

Two edge conditions may govern the deformation of plates in the plastic region. The first occurs when opposite edges are not built-in. In this case, elastic plate deflection theory and yield-line theory apply. The second involves tension-membrane action which occurs when at least two opposite edges are clamped. In this case, tensile-membrane action can occur before the plate element reaches a support rotation of 12 degrees. Tensile-membrane action of built-in plates is not covered in this chapter. However, the designer can utilize yield-line theory for limited plate deflection problems.

The interrelationship between the various parameters involved in the design of plates is readily described in the idealized resistance-deflection curve shown in Figure 5-5 (+). The figure shows the values for the ductility ratio, μ, and the support rotation, Θ, are arbitrary. For example, the deflection corresponding to a 2-degree support rotation can be greater than that corresponding to a ductility ratio of 10.

5-17 REBOUND.

Another aspect of dynamic design of steel structures subjected to blast loadings is the occurrence of rebound. Unlike the conditions prevailing in reinforced concrete structures where rebound considerations may not be of primary concern, steel structures will be subjected to relatively large stress reversals caused by rebound and will require lateral bracing of unstayed compression flanges which were formerly in tension. Rebound is more critical for elements supporting light dead loads and subjected to blast pressures of short duration. It is also a primary concern in the design of reversal bolts for blast doors.

5-18 SECONDARY MODES OF FAILURE.

5-18.1 General.

In the process of designing for the plastic or ductile mode of failure, it is important to follow certain provisions in order to avoid premature failure of the structure, i.e., to ensure that the structure can develop its full plastic resistance.

These secondary modes of failure can be grouped in two main categories:

(1) Instability modes of failure

(2) Brittle modes of failure

5-18.2 Instability Modes of Failure.

In this category, the problem of structural instability at two levels is of concern, namely, overall buckling of the structural system as a whole, and buckling of the component elements.

Overall buckling of framed structures can occur in two essentially different manners. In the first case, the load and the structure are symmetric; deformations remain also symmetric up to a critical value of the load for which a sudden change in configuration will produce instant anti-symmetry, large sidesway and displacement, and eventually a failure by collapse if not by excessive deformations. This type of instability can also occur in the elastic domain before substantial deformation or any plastification has taken place. It is called "instability by bifurcation."

In the second case, the loading or the structure or both are nonsymmetric. With the application of the load, sidesway develops progressively. In such cases, the vertical loads acting through the sidesway displacements, commonly called "the P-Δ effect," create second order bending moments that magnify the deformation. Because of rapidly increasing displacements, plastic hinges form, thereby decreasing the rigidity of the structure and causing more sidesway. This type of instability is related to a continuous deterioration of the stiffness leading to an early failure by either a collapse mechanism or excessive sidesway.

Frame instability need not be explicitly considered in the plastic design of one- and two-story unbraced frames provided that the individual columns and girders are designed according to the beam-column criteria of Section 5-37. For frames greater than two stories, bracing is normally required according to the AISC provisions for plastic design in order to ensure the overall stability of the structure. However, if an inelastic dynamic frame analysis is performed to determine the complete time-history of the structural response to the blast loading, including the P-Δ effects, it may be established, in particular cases, that lateral bracing is not necessary in a frame greater than two stories. As mentioned previously, computer programs which perform an inelastic, multi-degree-of-freedom analysis of frame structures may be employed for such an analysis.

Buckling of an element in the structure (e.g., a beam, girder, or column) can occur under certain loading and end conditions. Instability is of two types, namely, buckling of the member as a whole (e.g., lateral torsional buckling) and local buckling at certain sections, including flange buckling and web crippling.

Provisions for plastic design of beams and columns are presented in a separate section of this chapter.

5-18.3 Brittle Modes of Failure.

Under dynamic loading, there is an enhanced possibility that brittle fracture can develop under certain conditions. Since this type of failure is sudden in nature and difficult to predict, it is very important to diminish the risk of such premature failure.

The complexity of the brittle fracture phenomena precludes a complete quantitative definition. As a result, it is impossible to establish simple rules for design. Brittle fracture will be associated with a loss in flexural resistance.

Brittle fractures are caused by a combination of adverse circumstances that may include a few, some, or all of the following:

(1) Local stress concentrations and residual stresses.

(2) Poor welding.

(3) The use of a notch sensitive steel.

(4) Shock loading or rapid strain rate.

(5) Low temperatures.

(6) Decreased ductility due to strain aging.

(7) The existence of a plane strain condition causing a state of tri-axial tension stresses, especially in thick gusset plates, thick webs and in the vicinity of welds.

(8) Inappropriate use of some forms of connections.

The problem of brittle fracture is closely related to the detailing of connections, a topic that will be treated in a separate section of this chapter. However, there are certain general guidelines to follow in order to minimize the danger of brittle fracture:

(1) Steel material must be selected to conform with the condition anticipated in service.

(2) Fabrication and workmanship should meet high standards, e.g., sheared edges and notches should be avoided, and material that has been severely cold-worked should be removed.

(3) Proportioning and detailing of connections should be such that free movement of the base material is permitted, stress concentrations and triaxial stress conditions are avoided, and adequate ductility is provided.

Figure 5-3 Member End Rotations for Beams and Frames

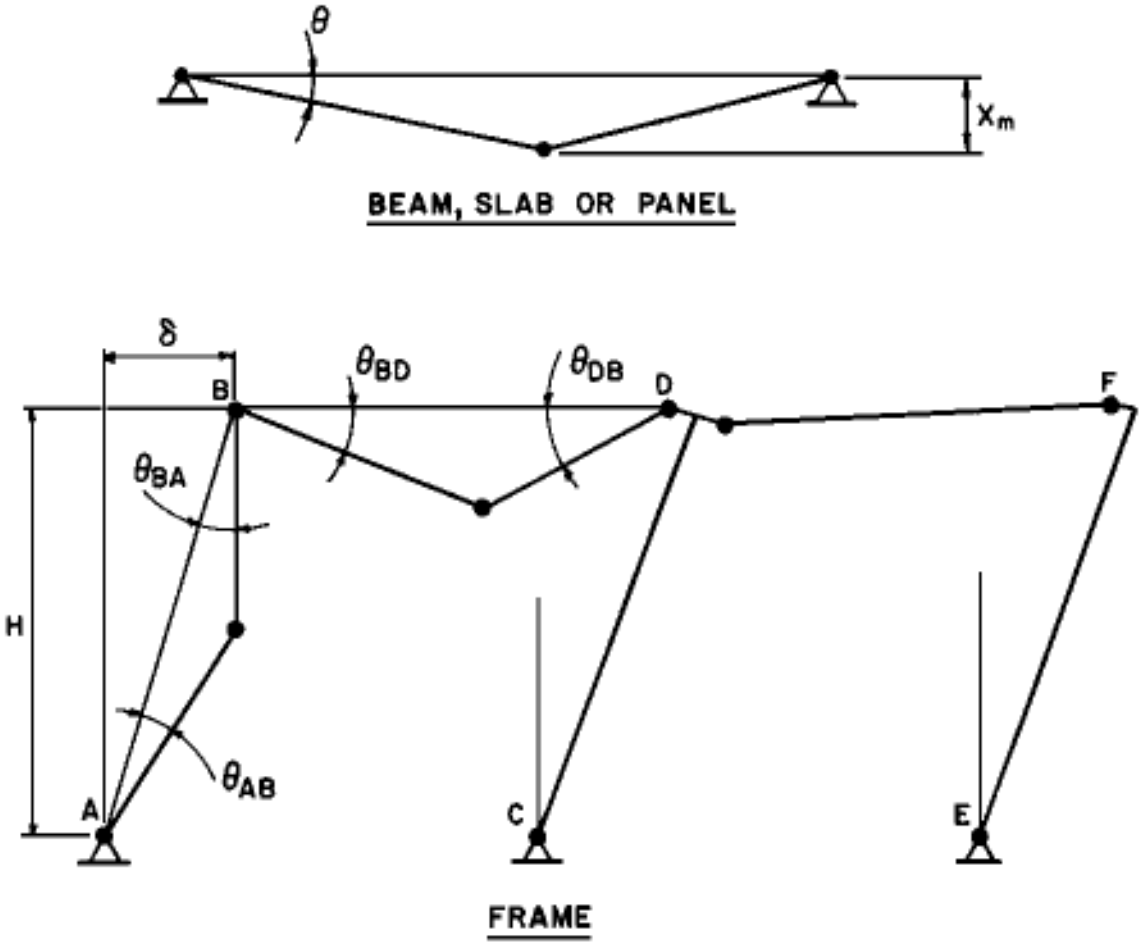

Figure 5-4 Relationship Between Designs Parameters for Beams

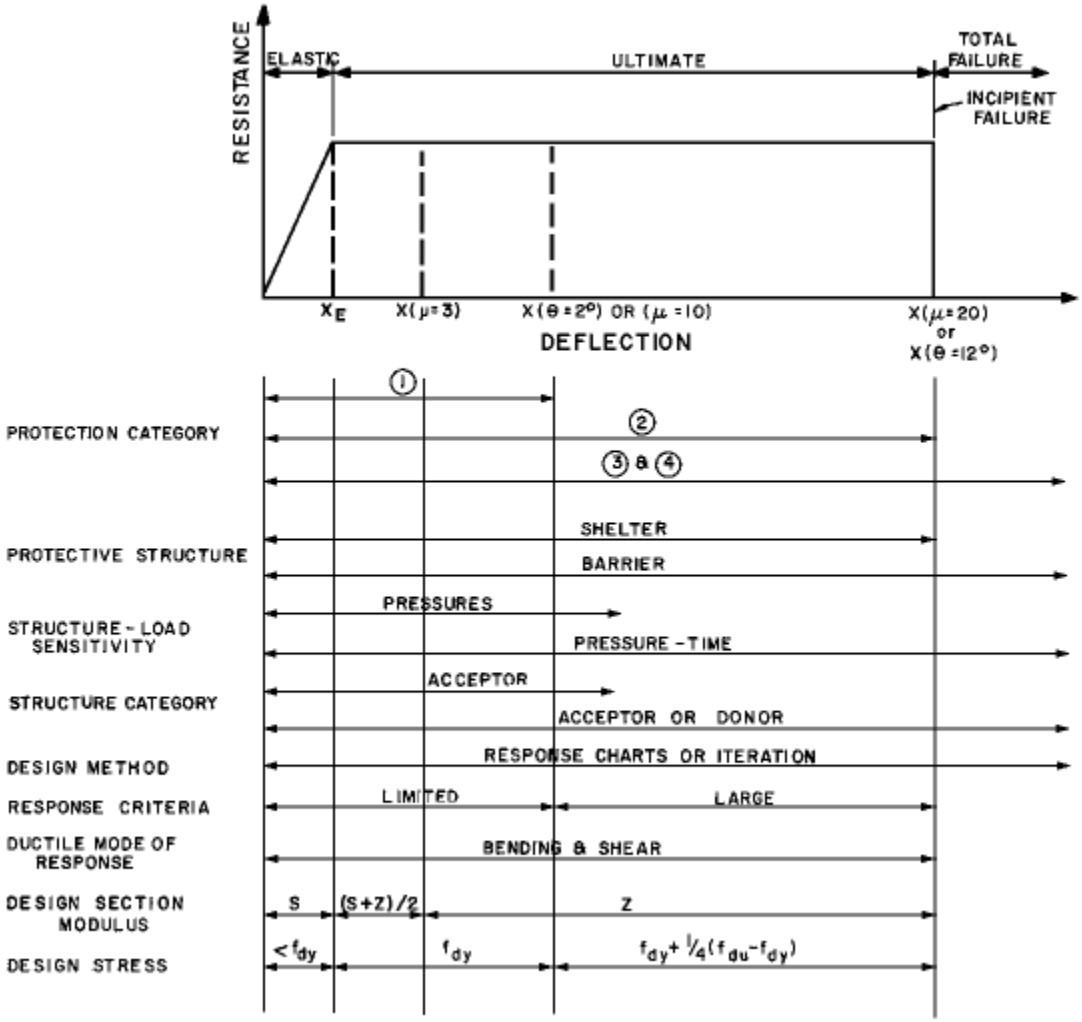

Figure 5-5 Relationship Between Design Parameters for Plates

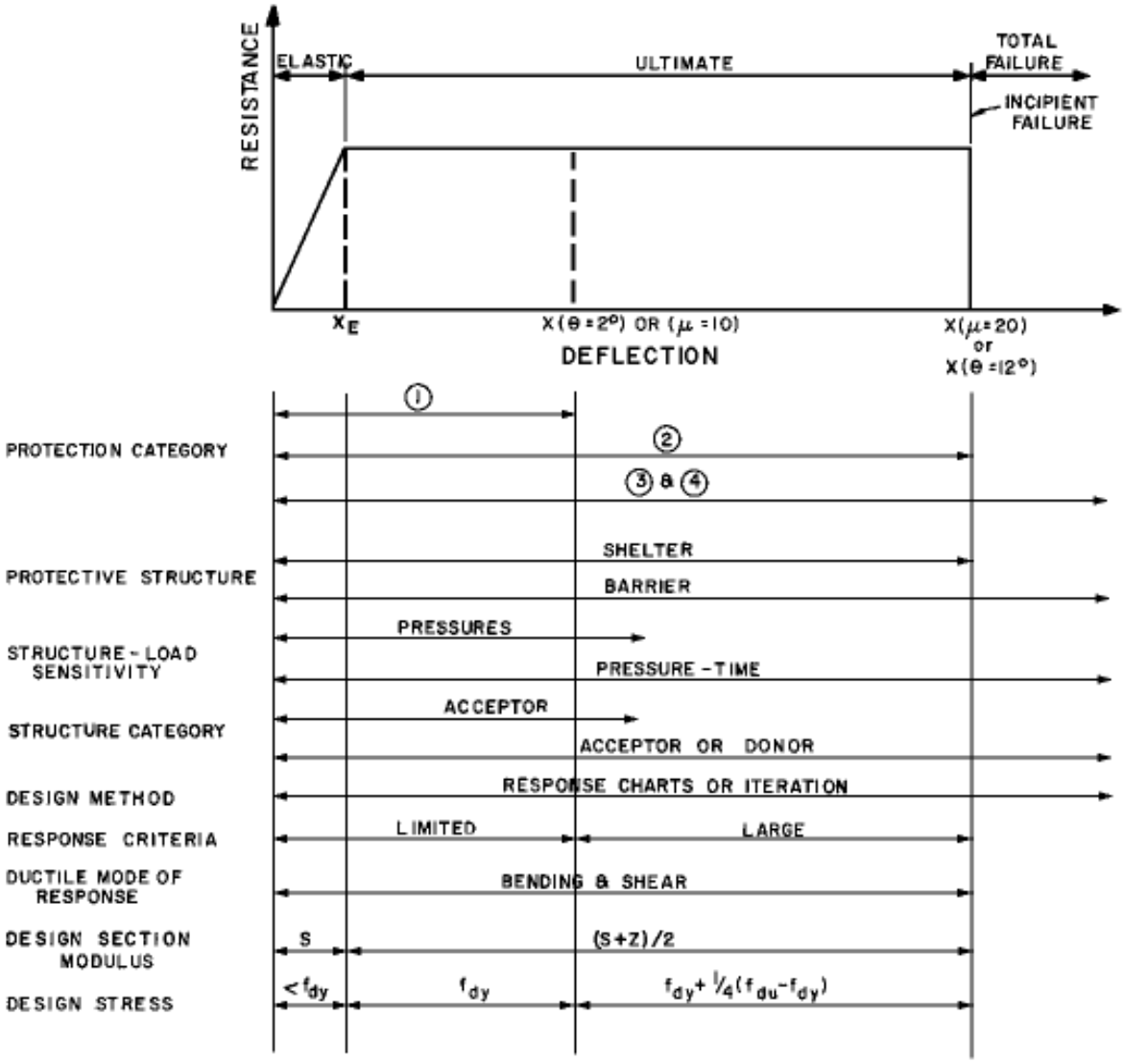

DESIGN OF SINGLE SPAN AND CONTINUOUS BEAMS

5-19 GENERAL.

The emphasis in this section is on the dynamic plastic design of structural steel beams. Design data have been derived from the static provisions of the AISC Specification with necessary modifications and additions for blast design. It should be noted that all provisions on plastic design in the AISC Specification apply, except as modified in this chapter.

The calculation of the dynamic flexural capacity of beams is described in detail. The necessary information is presented for determining the equivalent bilinear resistance-deflection functions used in evaluating the basic flexural response of beams. Also presented are the supplementary considerations of adequate shear capacity and local and overall stability which are necessary for the process of hinge formation, moment redistribution and inelastic hinge rotation to proceed to the development of a full collapse mechanism.

5-20 DYNAMIC FLEXURAL CAPACITY.

5-20.1 General.

The ultimate dynamic moment resisting capacity of a steel beam is given by

$$M_{pu} = f_{ds}Z \qquad (5\text{-}5)$$

where f_{ds} is the dynamic design stress (as described in Section 5-13) of the material and Z is the plastic section modulus. The plastic section modulus can be calculated as the sum of the static moments of the fully yielded elements of the equal cross section areas above and below the neutral axis, i.e.:

$$Z = A_c m_1 + A_t m_2 \qquad (5\text{-}6)$$

Note: $A_c m_1 = A_t m_2$ for a doubly-symmetric section

where

A_c = *area of cross section in compression*
A_t = *area of cross section in tension*
m_1 = *distance from neutral axis to the centroid of the area in compression*
m_2 = *distance from neutral axis to the centroid of the area in tension*

For standard I-shaped sections (S, W, and M shapes), the plastic section modulus is approximately 1.15 times the elastic modulus for strong axis bending and may be obtained from standard manuals on structural steel design.

It is generally assumed that a fully plastic section offers no additional resistance to load. However, additional resistance due to strain hardening of the material is present as the deformation continues beyond the yield level of the beam. In the analysis of structural steel beams, it is assumed that the plastic hinge formation is concentrated at a section. Actually, the plastic region extends over a certain length that depends on the type of loading (concentrated or distributed) on the magnitude of the deformation, and on the shape factor of the cross section. The extent of the plastic hinge has no substantial influence on the ultimate capacity; it has, however, an influence on the final magnitude of the deflection. For all practical purposes, the assumption of a concentrated plastic hinge is adequate.

In blast design, although strains well into the strain-hardening range may be tolerated, the corresponding additional resistance is generally not sufficient to warrant analytical consideration. Excessive support rotation and/or ductility ratios of beams, which are susceptible to local flange or lateral torsional buckling, are not recommended.

5-20.2 Moment-curvature Relationship for Beams.

Figure 5-6 (+) shows the stress distribution at various stages of deformation for a plastic hinge section. Theoretically, the beam bends elastically until the outer fiber stress reaches f_{ds} and the yield moment designated by M_y is attained (Figure 5-6a). As the moment increases above M_y, the yield stress progresses inward from the outer fibers of the section towards the neutral axis as shown in Figure 5-6b. As the moment approaches the fully plastic moment, a rectangular stress distribution as shown in Figure 5-6c is approached. The ratio between the fully plastic moment to the yield moment is the shape factor, f, for the section, i.e., the ratio between the plastic and elastic section moduli.

A representative moment-curvature relationship for a simply-supported steel beam is shown in Figure 5-7 (+). The behavior is elastic until the yield moment M_y is reached. With further increase in load, the curvature increases at a greater rate as the fully plastic moment value, M_2, is approached. Following the attainment of M_2, the curvature increases significantly, with only a small increase in moment capacity.

For design purposes, a bilinear representation of the moment-curvature relationship is employed as shown by the dashed lines in Figure 5-7 (+). For beams with a moderate design ductility ratio ($\mu \leq 3$), the design moment $M_p = M_1$. For beams with a larger design ductility ratio ($\mu > 3$), the design moment $M_p = M_2$.

5-20.3 Design Plastic Moment, M_p.

The equivalent plastic design moment shall be computed as follows:

For beams with ductility ratios less than or equal to 3:

$$M_p = f_{ds}\,(S + Z)/2 \qquad (5\text{-}7)$$

where S and Z are the elastic and plastic section moduli, respectively.

For beams with ductility ratios greater than 3 and beam columns:

$$M_p = f_{ds} Z \qquad (5\text{-}8)$$

Equation 5-7 is consistent with test results for beams with moderate ductilities. For beams which are allowed to undergo large ductilities, Equation 5-8, based upon full plastification of the section, is considered reasonable for design purposes.

It is important to note that the above pertains to beams which are supported against buckling. Design provisions for guarding against local and overall buckling of beams during plastic deformation are discussed in Sections 5-24, 5-25, and 5-26.

5-21 RESISTANCE AND STIFFNESS FUNCTIONS.

5-21.1 General.

The single-degree-of-freedom analysis which serves as the basis for the flexural response calculation requires that the equivalent stiffness and ultimate resistance be defined for both single-span beams and continuous beams. The ultimate resistance values correspond to developing a full collapse mechanism in each case. The equivalent stiffnesses correspond to load-deflection relationships that have been idealized as bilinear functions with initial slopes so defined that the areas under the idealized load deflection diagrams are equal to the areas under the actual diagrams at the point of inception of fully plastic behavior of the beam. This concept is covered in Section 3-13 of Chapter 3.

5-21.2 Single-span Beams.

Formulas for determining the stiffness and resistance for one-way steel beam elements are presented in Tables 3-1 (+) and 3-8 (+) of Chapter 3. The values of M in Table 3-1 represents the plastic design moment, M_p. For example, the value of r_u for the fixed-simple, uniformly loaded beam becomes $r_u = 12\, M_p/L^2$.

5-21.3 Multi-span Beams.

The beam relationships for defining the bilinear resistance function for multi-span continuous beams under uniform loading are summarized below. These expressions are predicated upon the formation of a three-hinge mechanism in each span. Maximum economy normally dictates that the span lengths and/or member sizes be adjusted such that a mechanism forms simultaneously in all spans.

It must be noted that the development of a mechanism in a particular span of a continuous beam assumes compatible stiffness properties at the end supports. If the

ratio of the length of the adjacent spans to the span being considered is excessive (say, greater than three). it may not be possible to reach the limit load without the beam failing by excessive deflection.

For uniformly distributed loading on equal spans or spans which do not differ in length by more than 20 percent, the following relationships can be used to define the bilinear resistance function:

Two-span continuous beam:

$$R_u = r_u bL = 12\ M_p/L \qquad (5\text{-}9)$$

$$K_E = 163\ EI/L^3 \qquad (5\text{-}10)$$

Exterior span of continuous beams with three or more spans:

$$R_u = r_u bL = 11.7 M_p/L \qquad (5\text{-}11)$$

$$K_E = 143 EI/L^3 \qquad (5\text{-}12)$$

Interior span of continuous beam with three or more spans:

$$R_u = r_u bL = 16.0 M_p/L \qquad (5\text{-}13)$$

$$K_E = 300 EI/L^3 \qquad (5\text{-}14)$$

For design situations which do not meet the required conditions, the bilinear resistance function may be developed by the application of the basic procedures of plastic analysis.

5-22 DESIGN FOR FLEXURE.

5-22.1 General.

The design of a structure to resist the blast of an accidental explosion consists essentially of the determination of the structural resistance required to limit calculated deflections to within the prescribed maximum values as outlined in Section 5-35. In general, the resistance and deflection may be computed on the basis of flexure provided that the shear capacity of the web is not exceeded. Elastic shearing deformations of steel members are negligible as long as the depth to span ratio is less than about 0.2 and hence, a flexural analysis is normally sufficient for establishing maximum deflections.

5-22.2 Response Charts.

Dynamic response charts for one-degree-of-freedom systems in the elastic or elasto-plastic range under various dynamic loads are given in Chapter 3. To use the charts, the effective natural period of vibration of a structural steel beam must be determined. The procedures for determining the natural period of vibration for one-way elements are outlined in Section 3-17.4 of Chapter 3. Equation 5-15 can be used to determine the natural period of vibration for any system for which the total effective mass, M_e, and equivalent elastic stiffness, K_E are known:

$$T_N = 2\pi (M_e / K_E)^{1/2} \qquad 5\text{-}15$$

5-22.3 Preliminary Dynamic Load Factors.

For preliminary flexural design of beams situated in low pressure range, it is suggested that an equivalent static ultimate resistance equal to the peak blast pressure be used for those beams designed for 2 degrees support rotation. For large support rotations, a preliminary dynamic load factor of 0.5 is recommended. Since the duration of the loading for low pressure range will generally be the same or longer than the period of vibration of the structure, revisions to this preliminary design from a dynamic analysis will usually not be substantial. However, for structures where the loading environment pressure is such that the load duration is short as compared with the period of vibration of the structure, this procedure may result in a substantial overestimate of the required resistance.

5-22.4 Additional Considerations in Flexural Design.

Once a dynamic analysis is performed on the single span or continuous beam, the deformations must be checked with the limitations set in the criteria. The provisions for local buckling, web crippling and lateral bracing must be met. The deformation criteria for beam elements including purlins, spandrels and girts are summarized in Section 5-35.

The rebound behavior of the structure must not be overlooked. The information required for calculating the elastic rebound of structures is contained in Figure 3-268 (+) of Chapter 3. The provisions for local buckling and lateral bracing, as outlined in subsequent sections of this chapter, shall apply in the design for rebound.

5-23 DESIGN FOR SHEAR.

Shearing forces are of significance in plastic design primarily because of their possible influence on the plastic moment capacity of a steel member. At points where large bending moments and shear forces exist, the assumption of an ideal elasto-plastic stress-strain relationship indicates that during the progressive formation of a plastic hinge, there is a reduction of the web area available for shear. This reduced area could result in an initiation of shear yielding and possibly reduce the moment capacity.

However, it has been found experimentally that I-shaped sections achieve their fully plastic moment capacity provided that the average shear stress over the full web area is less than the yield stress in shear. This result can basically be attributed to the fact that I-shaped sections carry moment predominantly through the flanges and shear predominantly through the web. Other contributing factors include the beneficial effects of strain hardening and the fact that combinations of high shear and high moment generally occur at locations where the moment gradient is steep.

The yield capacity of steel beams in shear is given by:

$$V_p = f_{dv} A_w \qquad 5\text{-}16$$

where V_p is the shear capacity, f_{dv} is the dynamic yield stress in shear of the steel (Equation 5-4), and A_w is the area of the web. For I-shaped beams and similar flexural members with thin webs, only the web area between flange plates should be used in calculating A_w.

For several particular load and support conditions, equations for the support shears, V, for one-way elements are given in Table 3-9 (+) of Chapter 3. As discussed above, as long as the acting shear V does not exceed V_p, I-shaped sections can be considered capable of achieving their full plastic moment. If V is greater than V_p, the web area of the chosen section is inadequate and either the web must be strengthened or a different section should be selected.

However, for cases where the web is being relied upon to carry a significant portion of the moment capacity of the section, such as rectangular cross section beams or built-up sections, the influence of shear on the available moment capacity must be considered as treated in Section 5-31.

5-24 LOCAL BUCKLING.

In order to ensure that a steel beam will attain fully plastic behavior and attain the desired ductility at plastic hinge locations, it is necessary that the elements of the beam section meet minimum thickness requirements sufficient to prevent a local buckling failure. Adopting the plastic design requirements of the AISC Specification, the width-thickness ratio for flanges of rolled I- and W-shapes and similar built-up single web shapes that would be subjected to compression involving plastic hinge rotation shall not exceed the following values:

f_y (ksi)	$b_f/2t_f$
36	8.5
42	8.0
45	7.4
50	7.0
55	6.6
60	6.3
65	6.0

where f_y is the specified minimum static yield stress for the steel (Table 5-1 (+)), b_f is the flange width, and t_f is the flange thickness.

The width-thickness ratio of similarly compressed flange plates in box sections and cover plates shall not exceed $190/(f_y)^{1/2}$. For this purpose, the width of a cover plate shall be taken as the distance between longitudinal lines of connecting rivets, high-strength bolts, or welds.

The depth-thickness ratio of webs of members subjected to plastic bending and axial compression shall not exceed the value given by Equation 5-17 or 5-18 as applicable.

$$\frac{d}{t_w} = \frac{412}{f_y}\left[1 - 1.4\frac{P}{P_y}\right] \text{ when } \frac{P}{P_y} \le 0.27 \qquad \textit{5-17}$$

$$\frac{d}{t_w} = \frac{257}{f_y} \text{ when } \frac{P}{P_y} > 0.27 \qquad \textit{5-18}$$

where

P = the applied compressive load
P_y = the plastic axial load equal to the cross sectional area times the specified minimum static yield stress, f_y

These equations which are applicable to local buckling under dynamic loading have been adopted from the AISC provisions for static loading. However, since the actual process of buckling takes a finite period of time, the member must accelerate laterally and the mass of the member provides an inertial force retarding this acceleration. For this reason, loads that might otherwise cause failure may be applied to the members for very short durations if they are removed before the buckling has occurred. Hence, it is appropriate and conservative to apply the criteria developed for static loads to the case of dynamic loading of relatively short duration.

These requirements on cross section geometry should be adhered to in the design of all members for blast loading. However, in the event that it is necessary to evaluate the load-carrying capacity of an existing structural member which does not meet these provisions, the ultimate capacity should be reduced in accordance with the recommendations made for plastic and inelastic design the Commentary and AISC Specification.

5-25 WEB CRIPPLING.

Since concentrated loads and reactions along a short length of flange are carried by compressive stresses in the web of the supporting member, local yielding may occur followed by crippling or crumpling of the web. Stiffeners bearing against the flanges at load points and fastened to the web are usually employed in such situations to provide a gradual transfer of these forces to the web.

Provisions for web stiffeners, as given in the AISC Specification, should be used in dynamic design. In applying these provisions, f_y should be taken equal to the specified static yield strength of the steel.

5-26 LATERAL BRACING.

5-26.1 General.

Lateral bracing support is often provided by floor beams, joists or purlins which frame into the member to be braced. The unbraced lengths (l_{cr}, as defined in Sections 5-26.2 and 5-26.3) are either fixed by the spacing of the purlins and girts or by the spacing of supplementary bracing.

When the compression flange is securely connected to steel decking or siding, this will constitute adequate lateral bracing in most cases. In addition, inflection points (points of contraflexure) can be considered as braced points.

Members built into a masonry wall and having their web perpendicular to this wall can be assumed to be laterally supported with respect to their weak axis of bending. In addition, points of contraflexure can be considered as braced points, if necessary.

Members subjected to bending about their strong axis may be susceptible to lateral-torsional buckling in the direction of the weak axis if their compression flange is not laterally braced. Therefore, in order for a plastically designed member to reach its collapse mechanism, lateral supports must be provided at the plastic hinge locations and at a certain distance from the hinge location. Rebound, which constitutes stress reversals, is an important consideration for lateral bracing support.

5-26.2 Requirements for Members with $\mu \leq 3$.

Since members with the design ductility ratios less than or equal to three undergo moderate amounts of plastic deformation, the bracing requirements are somewhat less stringent.

For this case, the following relationship may be used:

$$\frac{1}{r_T} = \left[\frac{\left(102 \times 10^3 C_b\right)}{f_{ds}}\right]^{1/2} \qquad \text{5-19}$$

where

l = *distance between cross sections braced against twist or lateral displacement of the compression flange*
r_T = *radius of gyration of a section comprising the compression flange plus one-third of the compression web area taken about an axis in the plane of the web*
C_b = *bending coefficient defined in the AISC Specification*

5-26.3 Requirements for Members with μ > 3.

In order to develop the full plastic moment, M_p for members with design ductility ratios greater than three, the distance from the brace at the hinge location to the adjacent braced points should not be greater than l_{cr} as determined from either Equation 5-20 or 5-21, as applicable:

$$\beta \frac{l_{cr}}{r_y} = \frac{1375}{f_{ds}} + 25 \text{ when } 1.0 \geq \frac{\mathrm{M}}{\mathrm{M_p}} > -0.5 \qquad \text{5-20}$$

$$\beta \frac{l_{cr}}{r_y} = \frac{1375}{f_{ds}} \text{ when } -0.5 \geq \frac{\mathrm{M}}{\mathrm{M_p}} \geq -1.0 \qquad \text{5-21}$$

where

r_y = *the radius of gyration of the member about its weak axis*
M = *the lesser of the moments at the ends of the unbraced segment*
M/M_p = the end moment ratio. The moment ratio is positive when the segment is bent in reverse curvature and negative when bent in single curvature.
ß = *critical length correction factor (See Figure 5-8 (+))*

The critical length correction factor, *ß*, accounts for the fact that the required spacing of bracing, l_{cr}, decreases with increased ductility ratio. For example, for a particular member with r_y = 2 in. and f_{ds} = 51 ksi and using the equation for M/M_p = 0, we get l_{cr} = 71.7 in. for μ = 6 and l_{cr} = 39.7 in. for μ = 20.

5-26.4 Requirements for Elements Subjected to Rebound.

The bracing requirements for nonyielded segments of members and the bracing requirements for members in rebound can be determined from the following relationship:

$$f = 1.67\left[\frac{2}{3} - \frac{f_{ds}(1/r_T)^2}{1530 \times 10^3 C_b}\right] f_{ds} \qquad 5\text{-}22$$

where

f = *the maximum bending stress in the member, and in no case greater than* f_{ds}

When f equals f_{ds}, this equation reduces to the $1/r_T$ requirement of Equation 5-19.

5-26.5 Requirements for Bracing Members.

In order to function adequately, the bracing member must meet certain minimum requirements on axial strength and axial stiffness. These requirements are quite minimal in relation to the properties of typical framing members.

Lateral braces should be welded or securely bolted to the compression flange and, in addition, a vertical stiffener should generally be provided at bracing points where concentrated vertical loads are also being transferred. Plastic hinge locations within uniformly loaded spans do not generally require a stiffener. Examples of lateral bracing details are presented in Figure 5-9 (+).

Figure 5-6 Theoretical Stress Distribution for Pure Bending at Various Stages of Dynamic Loading

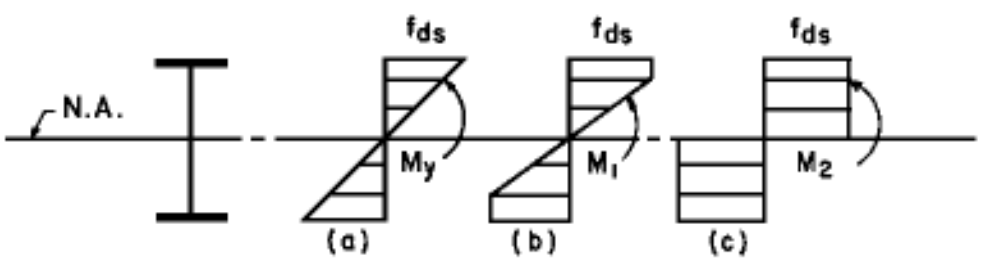

Figure 5-7 Moment-Curvature Diagram for Simple-Supported, Dynamically Loaded, I-shaped Beams

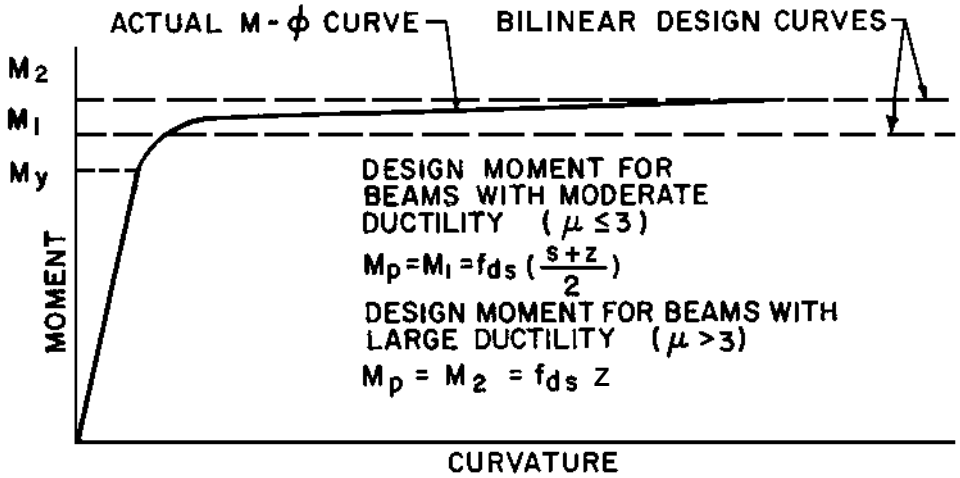

Figure 5-8 Values of β for use in Equations 5-20 and 5-21

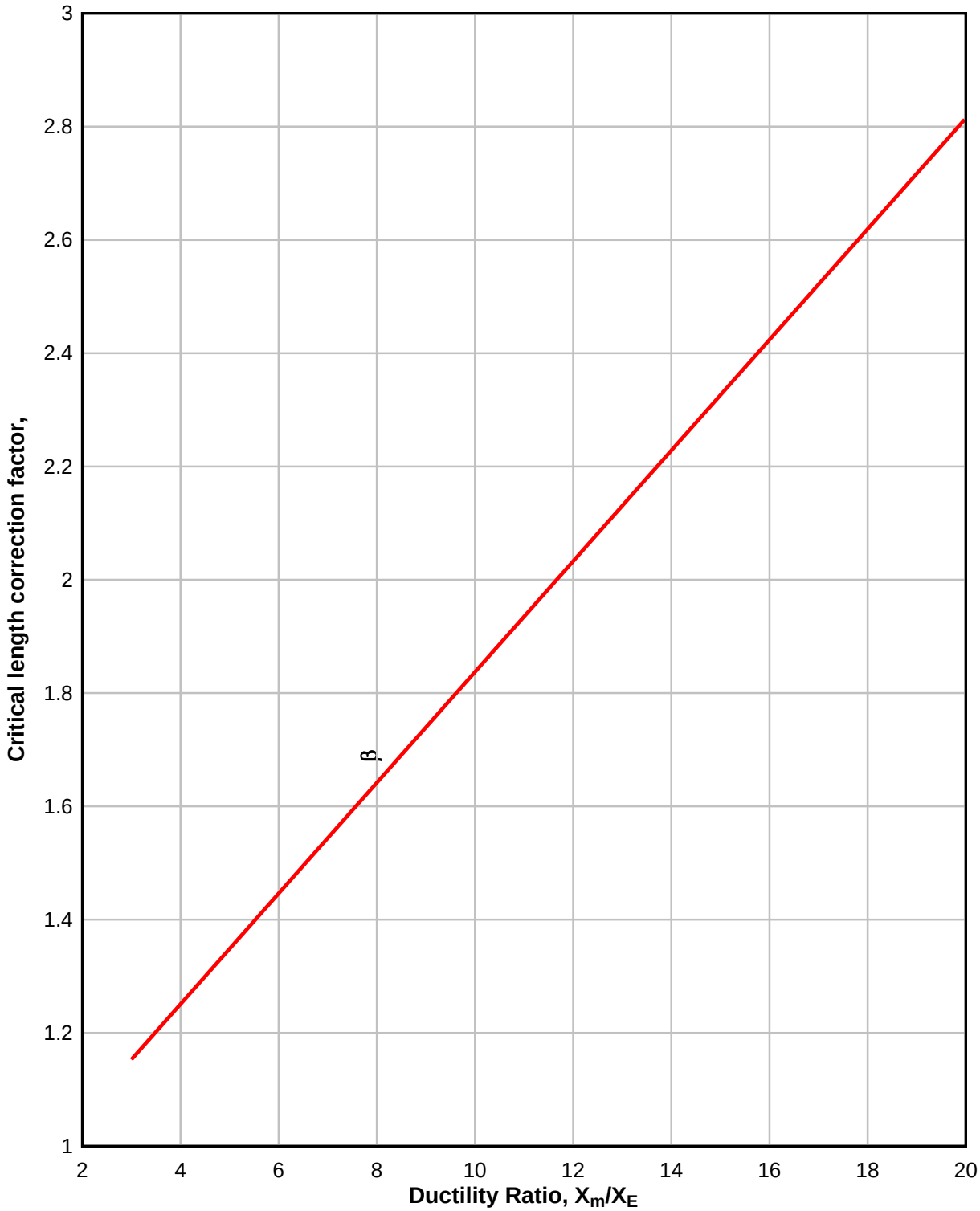

Figure 5-9 Typical Lateral Bracing Details

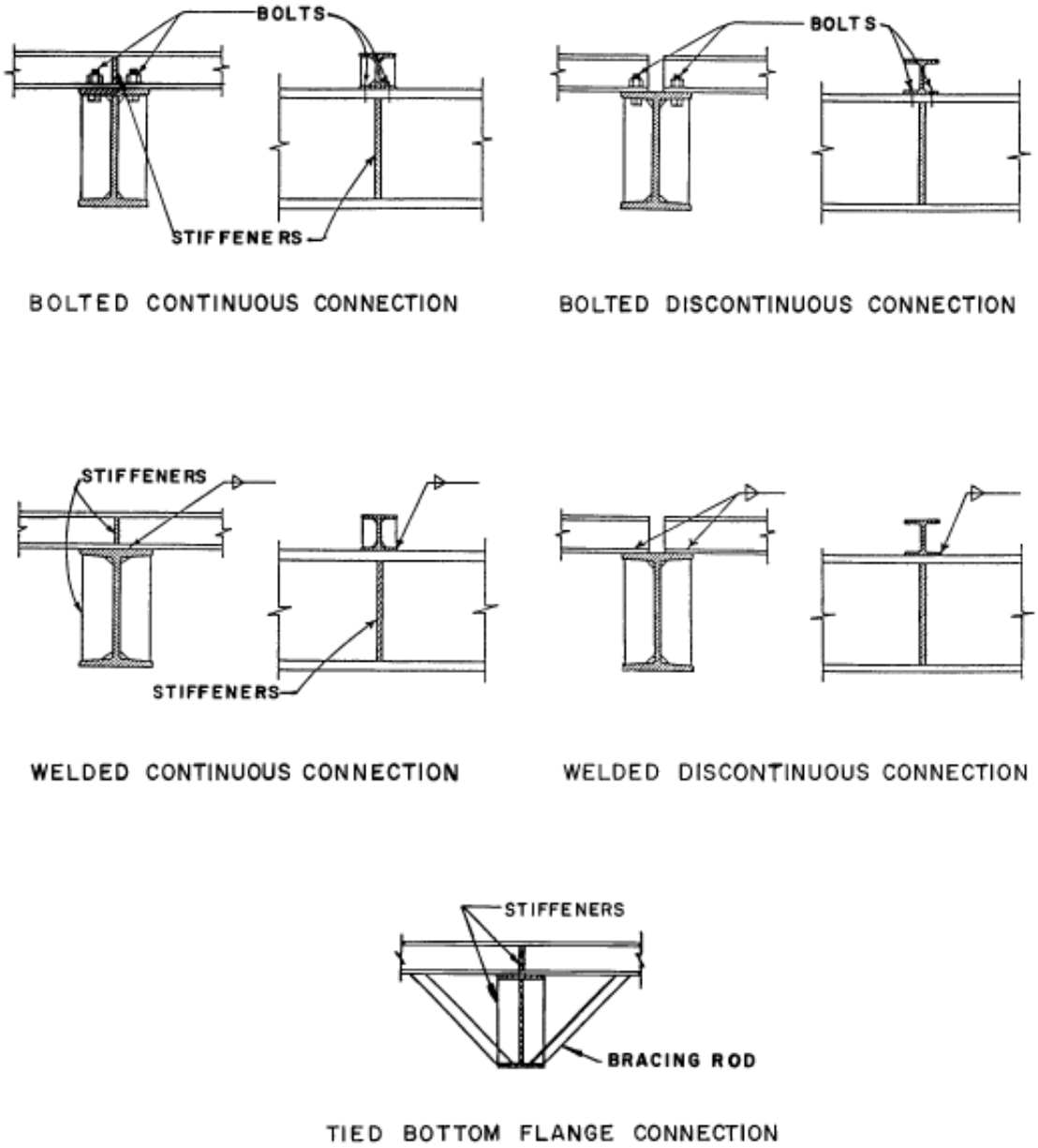

DESIGN OF PLATES

5-27 GENERAL.

The emphasis in this section is on the dynamic plastic design of plates. As in the case for simply supported and continuous beams, design data have been derived from the static provisions of the AISC Specification with necessary modifications and additions for blast design.

This section covers the dynamic flexural capacity of plates, as well as the necessary information for determining the equivalent bilinear resistance-deflection functions used in evaluating the flexural response of plates. Also presented is the supplementary consideration of adequate shear capacity at negative yield lines.

5-28 DYNAMIC FLEXURAL CAPACITY.

As is the case for standard I-shaped sections, the ultimate dynamic moment-resisting capacity of a steel plate is a function of the elastic and plastic moduli and the dynamic design stress. For plates or rectangular cross section beams, the plastic section modulus is 1.5 times the elastic section modulus.

A representative moment-curvature relationship for a simply-supported steel plate is shown in Figure 5-10 (+). The behavior is elastic until a curvature corresponding to the yield moment M_y is reached. With further increase in load, the curvature increases at a greater rate as the fully plastic moment value, M_2, is approached. Following the attainment of M_2, the curvature increases while the moment remains constant.

For plates and rectangular cross section beams, M_2 is 50 percent greater than M_y, and the nature of the transition from yield to the fully plastic condition depends upon the plate geometry and end conditions. It is recommended that a capacity midway between M_y and M_2 be used to define the plastic design moment, M_p (M_1 in Figure 5-11 (+)), for plates and rectangular cross section beams. Therefore, for plates with any ductility ratio, Equation 5-7 applies.

5-29 RESISTANCE AND STIFFNESS FUNCTIONS.

Procedures for determining stiffness and resistance factors for one- and two-way plate elements are outlined in Chapter 3. These factors are based upon elastic deflection theory and the yield-line method, and are appropriate for defining the stiffness and ultimate load-carrying capacity of ductile structural steel plates. In applying these factors to steel plates, the modulus of elasticity should be taken equal to 29,000,000 psi. For two-way isotropic steel plates, the ultimate unit positive and negative moments are equal in all directions; i.e.

$$M_{vn} = M_{vp} = M_{hn} = M_{hp} = M_p$$

where M_p is defined by Equation 5-7 and the remaining values are ultimate unit moment capacities as defined in Section 3-9.3 of Chapter 3. Since the stiffness factors were

derived for plates with equal stiffness properties in each direction, they are not applicable to the case of orthotropic steel plates, such as stiffened plates, which have different stiffness properties in each direction.

5-30 DESIGN FOR FLEXURE.

The procedure for the flexural design of a steel plate is essentially the same as the design of a beam. As for beams, it is suggested that preliminary dynamic load factors listed in Table 5-4 (+) be used for plate structures. With the stiffness and resistance factors from Section 5-29 and taking into account the influence of shear on the available plate moment capacity as defined in Section 5-31, the dynamic response and rebound for a given blast loading may be determined from the response charts in Chapter 3. It should be noted that for $\mu > 10$, the dynamic design stress, incorporating the dynamic ultimate stress, f_{du}, may be used (see Equation 5-2).

5-31 DESIGN FOR SHEAR.

In the design of rectangular plates, the effect of simultaneous high moment and high shear at negative yield lines upon the plastic strength of the plate may be significant. In such cases, the following interaction formula describes the effect of the support shear, V, upon the available moment capacity, M:

$$M/M_p = 1 - (V/V_p)^4 \qquad 5\text{-}23$$

where M_p is the fully plastic moment capacity in the absence of shear calculated from Equation 5-7, and V_p is the ultimate shear capacity in the absence of bending determined from Equation 5-16 where the web area, A_w, is taken equal to the total cross sectional area at the support.

For two-way elements, values for the ultimate support shears which are applicable to steel plates are presented in Table 3-10 (+) of Chapter 3.

It should be noted that, due to the inter-relationship between the support shear, V, the unit ultimate flexural resistance, r_u, of the two-way element, and the fully plastic moment resistance, M_p, the determination of the resistance of steel plates considering Equation 5-23, is not a simple calculation. Fortunately, the number of instances when negative yield lines with support shears are encountered for steel plates will be limited. Moreover, in most applications, the V/V_p ratio is such that the available moment capacity is at least equal to the plastic design moment for plates (Equation 5-7).

It is recommended that for a V/V_p ratio on negative yield lines less than 0.67, the plastic design moment for plates, as determined from Equation 5-7, should be used in design. However, if V/V_p is greater than 0.67, the influence of shear on the available moment capacity must be accounted for by means of Equation 5-23.

Figure 5-10 Moment-Curvature Diagram for Dynamically Loaded Plates and Rectangular Cross-Section Bases

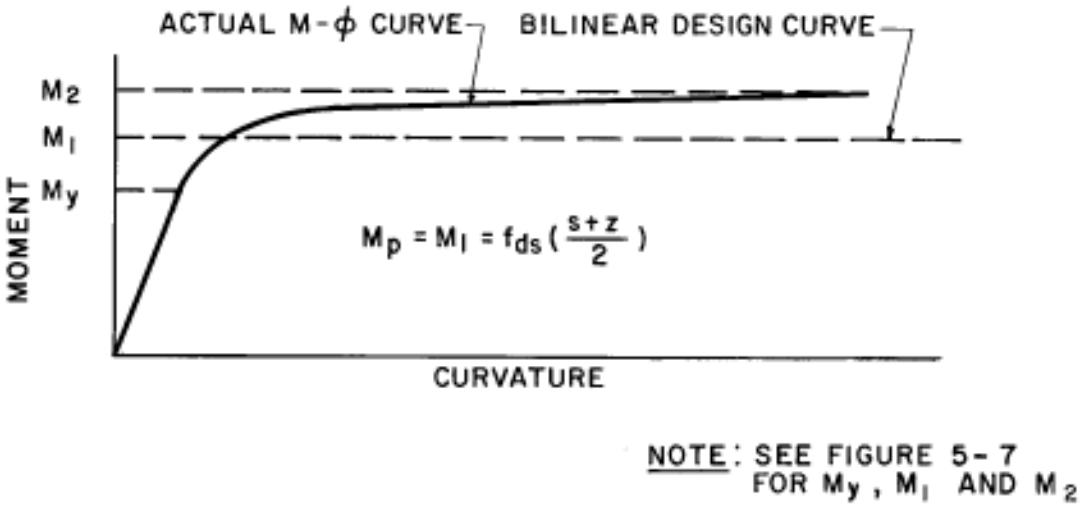

Table 5-4 Preliminary Dynamic Load Factors for Plates

* Whichever governs

SPECIAL CONSIDERATIONS, BEAMS

5-32 UNSYMMETRICAL BENDING.

5-32.1 General.

In blast design, the number of situations where unsymmetrical bending occurs is limited and where encountered, it can be treated without serious economic penalty. Due to the fact that blast overpressure loads act normal to the surfaces of a structure, the use of doubly-symmetric cross sections for purlins and girts (e.g., hot-rolled S- and W-sections or cold-formed channels used back-to-back) is generally recommended. In such cases, the deformation criteria for flexural members in Section 5-22 apply.

Unsymmetrical bending occurs when flexural members are subjected to transverse loads acting in a plane other than a principal plane. With this type of loading, the following are applicable:

(1) The member's neutral axis is not perpendicular to the plane of loading.

(2) Stresses cannot in general be calculated by means of the simple bending formula (M_c/I).

(3) The bending deflection does not coincide with the plane of loading but is perpendicular to the inclined neutral axis.

(4) If the plane of loads does not pass through the shear center of the cross section, bending is also accompanied by twisting.

Doubly-symmetric S, W, and box sections acting as individual beam elements and subjected to biaxial bending, i.e., unsymmetrical bending without torsion, can be treated using the procedures outlined in the following sections.

5-32.2 Elastic and Plastic Section Modulus.

The inclination of the elastic and plastic neutral axis through the centroid of the section can be calculated directly from the following relationship (see Figure 5-11 (+)):

$$\tan \alpha = (I_x / I_y) \tan \phi \qquad 5\text{-}24$$

where

α = *angle between the horizontal principal plane and the neutral axis*

ϕ = *angle between the plane of the load and the vertical principal plane*

where and x and y refer to the horizontal and vertical principal axes of the cross section. The equivalent elastic section modulus may be evaluated from the following equation:

$$S = (S_x S_y)/(S_y \cos \phi + S_x \sin \phi) \qquad 5\text{-}25$$

where

S_x = *elastic section modulus about the x-axis*
S_y = *elastic section modulus about the y-axis*

The plastic section modulus can be calculated using Equation 5-6. With these values of the elastic and plastic section moduli, the design plastic moment capacity can be determined from Equation 5-7.

5-32.3 Equivalent Elastic Stiffness.

In order to define the stiffness and bilinear resistance function, it is necessary to determine the elastic deflection of the beam. This deflection may be calculated by resolving the load into components acting in the principal planes of the cross section. The elastic deflection, δ, is calculated as the resultant of the deflections determined by simple bending calculations in each direction (see Figure 5-11 (+)). The equivalent elastic deflection on the bilinear resistance function X_E, may then be determined by assuming that the elastic stiffness is valid up to the development of the design plastic moment capacity, M_p.

5-32.4 Lateral Bracing and Recommended Design Criteria.

The bracing requirements of Section 5-26 may not be totally adequate to permit a biaxially loaded section to deflect into the inelastic range without premature failure. However, for lack of data, the provisions of Section 5-26 on lateral bracing may be used if the total member end rotation corresponding to the total deflection due to the inclined load is limited to 2 degrees. In addition, the actual details of support conditions and/or bracing provided to such members by the other primary and secondary members of the frame must be carefully checked to ensure that the proper conditions exist to permit deflections in the inelastic range.

5-32.5 Torsion and Unsymmetrical Bending.

The inelastic behavior of sections subjected to unsymmetrical bending, with twisting, is not totally known at present. Consequently, the use of sections with the resultant load not passing through the shear center is not recommended in plastic design of blast-resistant structures, unless torsional constraints are provided for the elements. In actual installations, however, the torsional constraint offered to a purlin or girt by the flexural rigidity of attached floor, roof, or wall panels may force the purlin or girt to deflect in the plane of loading with little or no torsional effects. Under such conditions or when some other means of bracing is provided to prevent torsional rotation in both the loading and rebound phases of the response, such unsymmetrically loaded members may be capable of performing well in the plastic range. However, because of the limited data presently available, there is insufficient basis for providing practical design guidelines in this area. Hence, if a case involving unsymmetrical bending with torsion cannot be prevented in design, the maximum ductility ratio should be limited to 1.0.

Furthermore, special precautions may have to be taken to restrict the torsional-flexural distortions that can develop under unsymmetrical loading, thereby reducing the flexural capacity of the member.

5-33 STEEL JOISTS AND JOIST GIRDERS (OPEN-WEB STEEL JOISTS).

Open-web joists are commonly used as load-carrying members for the direct support of roof and floor deck in buildings. The design of joists for conventional loads is covered by the "Standard Specifica33tions, Load Tables and Weight Tables for Steel Joists and Joist Girders," adopted by the Steel Joist Institute. For blast design, all the provisions of this Specification are in force, except as modified herein.

These joists are manufactured using either hot-rolled or cold-formed steel. H Series joists are composed of 50-ksi steel in the chord members and either 36 ksi or 50-ksi steel for the web sections. LH Series, DLH Series and joist girders are composed of joist chords or web sections with a yield strength of at least 36 ksi, but not greater than 50 ksi.

Standard load tables are available for simply supported, uniformly loaded joists supporting a deck and so constructed that the top chord is braced against lateral buckling. These tables indicate that the capacity of a particular joist may be governed by either flexural or shear (maximum end reaction) considerations. As discussed previously, it is preferable in blast applications to select a member whose capacity is controlled by flexure rather than shear, which may cause abrupt failure.

The tabulated loads include a check on the bottom chord as an axially loaded tensile member and the design of the top chord as a column or beam column. The width-thickness ratios of the unstiffened or stiffened elements of the cross section are also limited to values specified in the Standard Specifications.

The dynamic ultimate capacity of open-web joists may be taken equal to 1.7 x *SIF* x *DIF* times the allowable design load given in the joist tables. This value represents the safety factor of 1.7 multiplied by a dynamic increase factor, *DIF*, and the average strength increase factor, *SIF* (see Section 5-12).

The adequacy of the section in rebound must be evaluated. Upon calculating the required resistance in rebound, r^{-}/r_u, using the rebound chart in Chapter 3 (Figure 3-268 (+)), the lower chord must be checked as a column or beam column. If the bottom chord of a standard joist is not adequate in rebound, the chord must be strengthened either by reducing the unbraced length or by increasing the chord area. The top chord must be checked as an axial tensile member, but in most circumstances, it will be adequate.

The bridging members required by the joist specification should be checked for both the initial and rebound phase of the response to verify that they satisfy the required spacing of compression flange bracing for lateral buckling.

. In cases where the design of joists is governed by shear, the ductility ratio for the joist should not exceed unity. In addition, the joist members near the support should be investigated for the worst combination of slenderness ratio and axial load under load reversal.

For hot-rolled members not limited by shear considerations, design ductility ratios up to the values specified in Section 5-35 can be used. The design ductility ratio of joists with light gauge chord members should be limited to 1.0.

The top and bottom chords should be symmetrical about a vertical axis. If double angles or bars are used as chord members, the components of each chord should be fastened together so as to act as a single member.

SPECIAL CONSIDERATIONS, COLD-FORMED STEEL PANELS

5-34 BLAST RESISTANT DESIGN OF COLD-FORMED STEEL PANELS.

5-34.1 General.

Studies on cold-formed panels have shown that the effective width relationships for cold-formed light gauge elements under dynamic loading do not differ significantly from the static relationships. Consequently, the recommendations presently contained in the American Iron and Steel Institute (AISI) Specifications are used as the basis for establishing the special provisions needed for the design of cold-formed panels subjected to blast loads. Some of the formulas of the Specification have been extended to comply with ultimate load conditions and to permit limited performance in the inelastic range.

Two main modes of failure can be recognized, one governed by bending and the other by shear. In the case of continuous members, the interaction of the two influences plays a major role in determining the behavior and the ultimate capacity. Due to the relatively thin webs encountered in cold-formed members, special attention must also be paid to crippling problems. Basically, the design will be dictated by the capacity in flexure but subject to the constraints imposed by shear resistance and local stability.

5-34.2 Resistance in Flexure.

The material properties of the steel used in the production of cold-formed steel panels conforms to ASTM A446. This standard covers three grades (a, b, and c) depending on the yield point. Most commonly, panels are made of steel complying with the requirements of grade a, with a minimum yield point of 33 ksi and an elongation of rupture of 20 percent for a 2-inch gauge length. However, it is generally known that the yield stress of the material used in the manufacture of cold-formed panels generally exceeds the specified minimum yield stress by a significant margin; therefore, it is recommended that a design minimum yield stress of 40 ksi (corresponding to an average strength increase factor of $SIF = 1.21$) be used unless the actual yield stress of the material is known. For grades b and c which exhibit higher minimum yield points, an average strength increase factor of 1.21 is also recommended.

In calculating the dynamic yield stress of cold-formed steel panels, it is recommended that a dynamic increase factor, DIF, of 1.1 be applied irrespective of actual strain rate and, consequently, the value of the dynamic design stress to be used is

$$f_{ds} = SIF \times DIF \times f_y = 1.21 \times 1.1 \times f_y = 1.33\ f_y \qquad (5\text{-}26)$$

and hence, f_{ds} equals 44 ksi for the particular case of f_y = 33 ksi.

Ultimate design procedures, combined with the effective width concept, are used in evaluating the strength of cold-formed light gauge elements. Thus, a characteristic feature of cold-formed elements is the variation of their section properties with the intensity of the load. As the load increases beyond the level corresponding to the occurrence of local buckling, the effective area of the compression flange is reduced; as a result, the neutral axis moves toward the tension flange with the effective properties of the cross section such as *A* (area), *I* (moment of inertia) and *S* (section modulus), decreasing with load increase. The properties of the panels, as tabulated by the manufacturer, are related to different stress levels. The value of *S* referred to that of the effective section modulus at ultimate and the value of I related to a service stress level of 20 ksi. In the case of panels fabricated from hat sections and a flat sheet, two section moduli are tabulated, S^+ and S^-, referring to the effective section modulus for positive and negative moments, respectively. Consequently, the following ultimate moment capacities are obtained:

$$M_{up} = f_{ds}S^+ \qquad (5\text{-}27)$$

$$M_{un} = f_{ds}S^- \qquad (5\text{-}28)$$

where

M_{up} = *ultimate positive moment capacity for a 1-foot width of panel*
M_{un} = *ultimate negative moment capacity for a 1-foot width of panel*

It should be noted that in cases where tabulated section properties are not available, the required properties may be calculated based upon the relationships in the AISI Design Specification.

As for any single-span flexural element, the panel may be subjected to different end conditions, either simply supported or fixed. The fixed-fixed condition is seldom found in practice since this situation is difficult to achieve in actual installations. The simply fixed condition is found because of symmetry in each span of a two-span continuous panel. For multi-span members (three or more), the response is governed by that of the first span which is generally characterized by a simply supported condition at one support and a partial moment restraint at the other. Three typical cases can, therefore, be considered:

(1) Simply supported at both ends (single span).

(2) Simply supported at one end and fixed at the other (two equal span continuous member).

(3) Simply supported at one end and partially fixed at the other (first span of an equally spaced multi-span element).

The resistance of the panel is a function of both the strength of the section and the maximum moment in the member.

The ability of the panel to sustain yielding of its cross section produces significant moment re-distribution in the continuous member which results in an increase of the resistance of the panel.

The behavior of cold-formed steel sections in flexure is nonlinear as shown in Figure 5-12 (+). To simulate the bilinear approximation to the resistance-deflection curve, a factor of 0.9 is applied to the peak resistance. Therefore, for design purposes, the recommended resistance formula for a simply supported, single-span panel is given by:

$$r_u = 0.9 \times 8\ M_{up}/L^2 = 7.2\ M_{up}/L^2 \qquad 5\text{-}29$$

where r_u is the resistance per unit length of panel, and L is the clear or effective span length.

The recommended resistance formula for a simply-fixed, single-span panel or first span of an equally spaced continuous panel is given by:

$$r_u = 0.9 \times 4\ (M_{un} + 2M_{up})/L^2 = 3.6\ (M_{un} + 2M_{up})/L^2 \qquad 5\text{-}30$$

5-34.3 Equivalent Elastic Deflection.

As previously mentioned, the behavior of cold-formed sections in flexure is nonlinear as shown in Figure 5-12 (+). A bilinear approximation of the resistance-deflection curve is assumed for design. The equivalent elastic deflection X_E is obtained by using the following equation:

$$X_E = (ßr_uL^4)/EI_{20} \qquad 5\text{-}31$$

where *ß* is a constant which depends on the support conditions and whose values are as follows:

ß = 0.0130 for a simply supported element
ß = 0.0062 for simply fixed or continuous elements

I_{20} is defined as the effective moment of inertia of the section at a service stress of 20 ksi. The value of I_{20} is generally tabulated as a section property of the panel. The value of r_u is obtained from Equation 5-29 or 5-30.

5-34.4 Design for Flexure.

When performing a one-degree-of-freedom analysis of the panel's behavior, the properties of the equivalent system can be evaluated by using a load-mass factor, K_{LM} = 0.74, which is an average value applicable to all support conditions. The natural period of vibration for the equivalent single-degree system is thus obtained by substituting into Equation 5-15:

$$T_N = 2\pi (0.74\ mL/K_E)^{1/2} \qquad (5\text{-}32)$$

where

m = w/g *is the unit mass of the panel*
K_E = $r_u L/X_E$ *is the equivalent elastic stiffness of the system*

5-34.5 Recommended Ductility Ratios.

Figure 5-12 (+) illustrates the nonlinear character of the resistance-deflection curve and the recommended bilinear approximation. The initial slope of the actual curve is fairly linear until it enters a range of marked nonlinearity and, finally, a point of instability. However, excessive deflections cause the decking to act as a membrane in tension (solid curve) and, consequently, a certain level of stability sets in. It should be noted that, in order to use the procedure outlined in this section, care must be taken to adequately connect the ends of the decking so that it can achieve the desired level of tension-membrane action. A discussion of connectors at end panels is presented in Section 5-48. When tension-membrane action is not present, increased deflection will result in a significant drop off in resistance as illustrated by the dotted curve in Figure 5-12.

Two limits of deformation are assigned, depending on end-anchorage condition of the panel. For panels having nominal end anchorage, that is, where tension-membrane action is minimal, the maximum deflection of the panel is X_o, as illustrated in Figure 5-12 (+), and is defined by:

$$X_o = 1.75\ X_E \qquad (5\text{-}33)$$

For panels with sufficient end anchorage to permit tension-membrane action, the maximum deflection of the panel is X_m, as illustrated in Figure 5-12 (+), and is defined by:

$$X_m = 6.0\ X_E \qquad (5\text{-}34)$$

5-34.6 Recommended Support Rotations.

In order to restrict the magnitude of rotation at the supports, limitations are placed on the maximum deflections X_o and X_m as follows:

For elements where tension-membrane action is not present:

$$X_o = L/92 \text{ or } \Theta_{max} = 1.25 \text{ degrees} \qquad (5\text{-}35)$$

For elements where tension-membrane action is present:

$$X_m = L/29 \text{ or } \Theta_{max} = 4 \text{ degrees} \qquad (5\text{-}36)$$

5-34.7 Rebound.

Appropriate dynamic response charts for one-degree-of-freedom systems in the elastic or elasto-plastic range under various dynamic loads are given in Chapter 3. The problem of rebound should be considered in the design of decking due to the different section properties of the panel, depending on whether the hat section or the flat sheet is in compression. Figure 5-13 (+) presents the maximum elastic resistance in rebound as a function of T/T_N. While the behavior of the panel in rebound does not often control, the designer should be aware of the problem; in any event, there is a need for providing connections capable of resisting uplift or pull-out forces due to load reversal in rebound.

5-34.8 Resistance in Shear.

Webs with h/t in excess of 60 are in common use among cold-formed members and the fabrication process makes it impractical to use stiffeners. The design web stresses must, therefore, be limited to ensure adequate stability without the aid of stiffeners, thereby preventing premature local web failure and the accompanying loss of load-carrying capacity.

The possibility of web buckling due to bending stresses exists and the critical bending stress is given by Equation 5-37:

$$f_{cr} = 640{,}000/(h/t)^2 \leq f_y \qquad (5\text{-}37)$$

By equating f_{cr} to 32 ksi, which is a stress close to the yielding of the material, a value h/t = 141 is obtained. Since it is known that webs do not actually fail at these theoretical buckling stresses due to the development of post-buckling strength, it can be safely assumed that webs with $h/t \leq 150$ will not be susceptible to flexural buckling. Moreover, since the AISI recommendations prescribe a limit of h/t = 150 for unstiffened webs, this type of web instability need not be considered in the design.

Panels are generally manufactured in geometrical proportions which preclude web-shear problems when used for recommended spans and minimum support-bearing lengths of 2 to 3 inches. In blast design, however, because of the greater intensity of the loading, the increase in required flexural resistance of the panels requires shorter spans.

In most cases, the shear capacity of a web is dictated by instability due to either

(1) Simple shear stresses

(2) Combined bending and shearing stresses

For the case of simple shear stresses, as encountered at end supports, it is important to distinguish three ranges of behavior depending on the magnitude of *h*/*t*. For large values of *h*/*t*, the maximum shear stress is dictated by elastic buckling in shear and for intermediate *h*/*t* values, the inelastic buckling of the web governs; whereas for very small values of *h*/*t*, local buckling will not occur and failure will be caused by yielding produced by shear stresses. This point is illustrated in Figure 5-14 (+) for f_{ds} = 44 ksi. The provisions of the AISI Specification in this area are based on a safety factor ranging from 1.44 to 1.67 depending upon *h*/*t*. For blast-resistant design, the recommended design stresses for simple shear are based on an extension of the AISI provisions to comply with ultimate load conditions. The specific equations for use in design for f_{ds} = 44, 66 and 88 ksi are summarized in Table 5-5a (+), Table 5-6a (+), and Table 5-7a (+), respectively.

At the interior supports of continuous panels, high bending moments combined with large shear forces are present, and webs must be checked for buckling due to these forces. The interaction formula presented in the AISI Specification is given in terms of the allowable stresses rather than critical stresses which produce buckling. In order to adapt this interaction formula to ultimate load conditions, the problem of inelastic buckling under combined stresses has been considered in the development of the recommended design data.

In order to minimize the amount and complexity of design calculations, the allowable dynamic design shear stresses at the interior support of a continuous member have been computed for different depth-thickness ratios for f_{ds} = 44, 66, and 88 ksi, and tabulated in Table 5-5b (+), Table 5-6b (+), and Table 5-7b (+), respectively.

5-34.9 Web Crippling.

In addition to shear problems, concentrated loads or reactions at panel supports, applied over relatively short lengths, can produce load intensities that can cripple unstiffened thin webs. The problem of web crippling is rather complicated for theoretical analysis because it involves the following:

(1) Nonuniform stress distribution under the applied load and the adjacent portions of the web

(2) Elastic and inelastic stability of the web element

(3) Local yielding in the intermediate region of load application

(4) The bending produced by the eccentric load (or reaction) when it is applied on the bearing flange at a distance beyond the curved transition of the web

The AISI recommendations have been developed by relating extensive experimental data to service loads with a safety factor of 2.2, which was established taking into account the scatter in the data. For blast design of cold-formed panels, it is recommended that the AISI values be multiplied by a factor of 1.50 in order to relate the crippling loads to ultimate conditions with sufficient provisions for scatter in test data.

For those sections that provide a high degree of restraint against rotation of their webs, the ultimate crippling loads are given as follows:

Allowable ultimate end support reaction

$$Q_u = 1.5\, f_{ds} t^2\, [4.44 + 0.558\, (N/t)^{1/2}] \qquad 5\text{-}38$$

Allowable ultimate interior support reaction

$$Q_u = 1.5\, f_{ds} t^2\, [6.66 + 1.446\, (N/t)^{1/2}] \qquad 5\text{-}39$$

where

Q_u = *ultimate support reaction per web*
f_{ds} = *dynamic design stress*
N = *bearing length (in)*

The charts in Figure 5-15 (+) and Figure 5-16 (+) present the variation of Q_u as a function of the web thickness for bearing lengths from 1 to 5 inches for $f_d s$ = 44 ksi for end and interior supports, respectively. It should be noted that the values reported in the charts relate to one web only, the total ultimate reaction being obtained by multiplying Q_u by the number of webs in the panel.

For design, the maximum shear forces and dynamic reactions are computed as a function of the maximum resistance in flexure. The ultimate load-carrying capacity of the webs of the panel must then be compared with these forces. As a general comment, the shear capacity is controlled by web crippling for simply supported elements and by the allowable design shear stresses at the interior supports for continuous panels.

In addition, it can be shown that the resistance in shear governs only in cases of relatively very short spans. If a design is controlled by shear resistance, it is

recommended that another panel be selected since a flexural failure mode is generally preferred.

5-35 SUMMARY OF DEFORMATION CRITERIA FOR STRUCTURAL ELEMENTS.

Deformation criteria are summarized in Table 5-8 (+) for frames, beams and other structural elements including cold-formed steel panels, open-web joists and plates.

Figure 5-11 Biaxial Bending of a Doubly-Symmetric Section

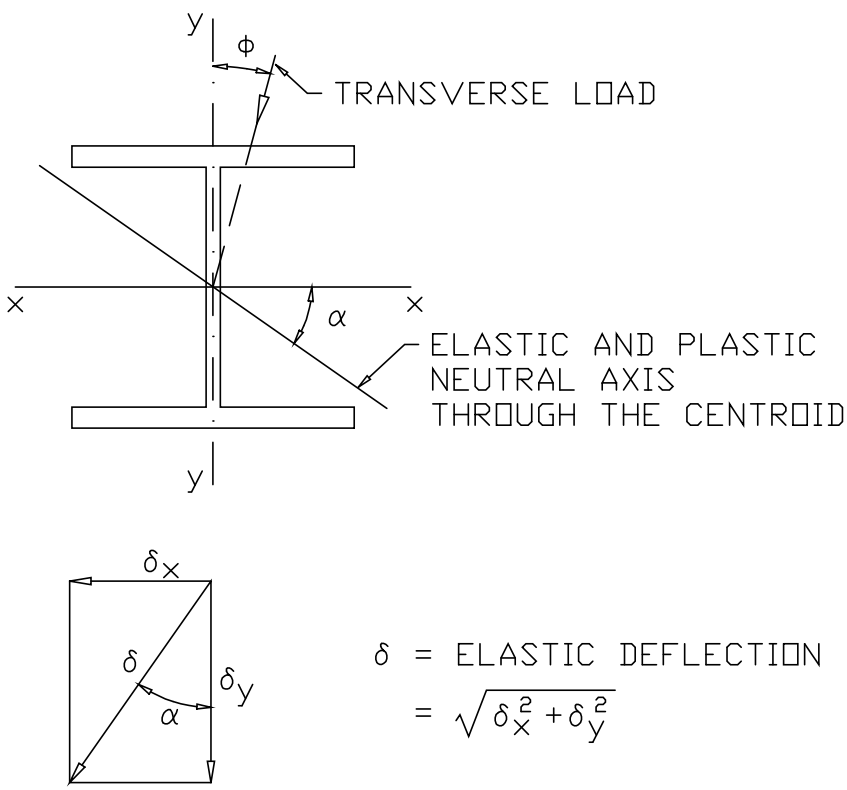

Figure 5-12 Resistance-Deflection Curve for a Typical Cold-Formed Section

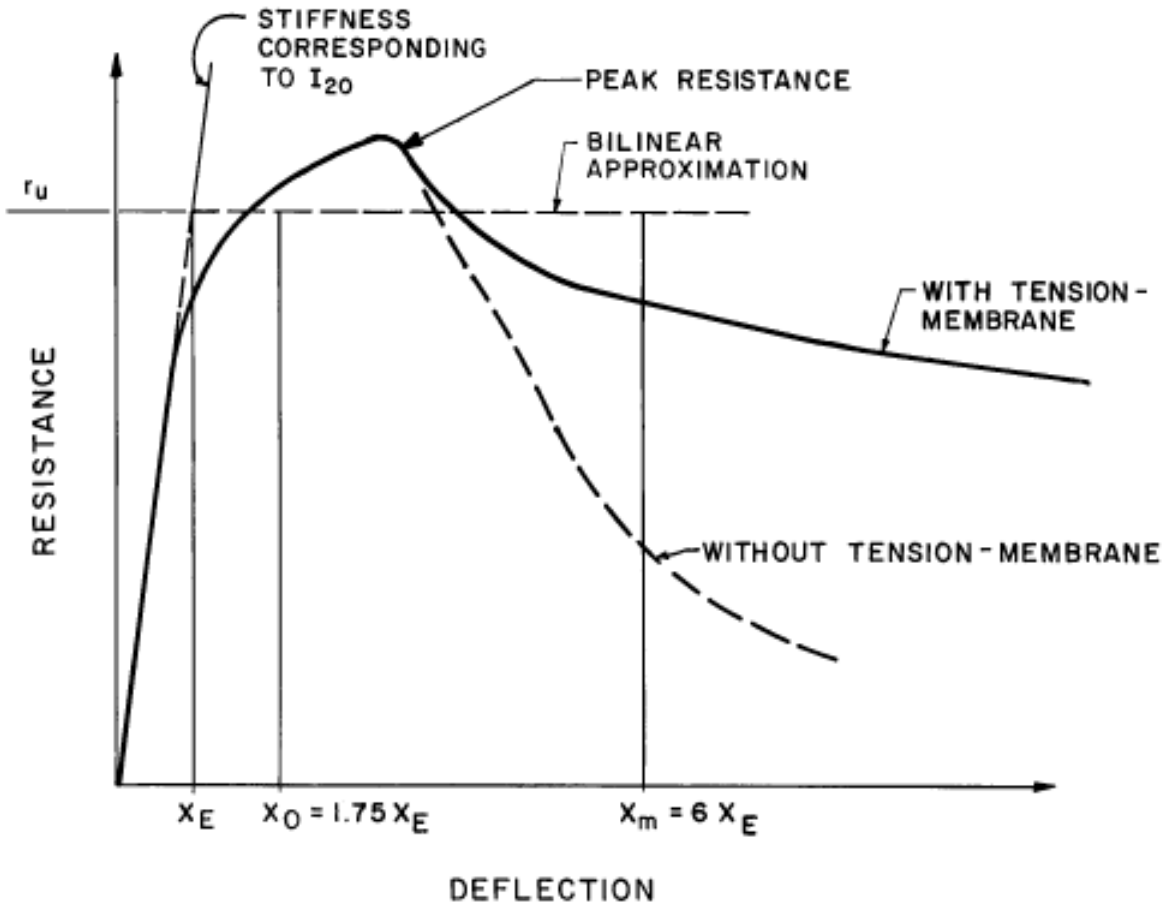

Figure 5-13 Elastic Rebound of Single-Degree-of-Freedom System

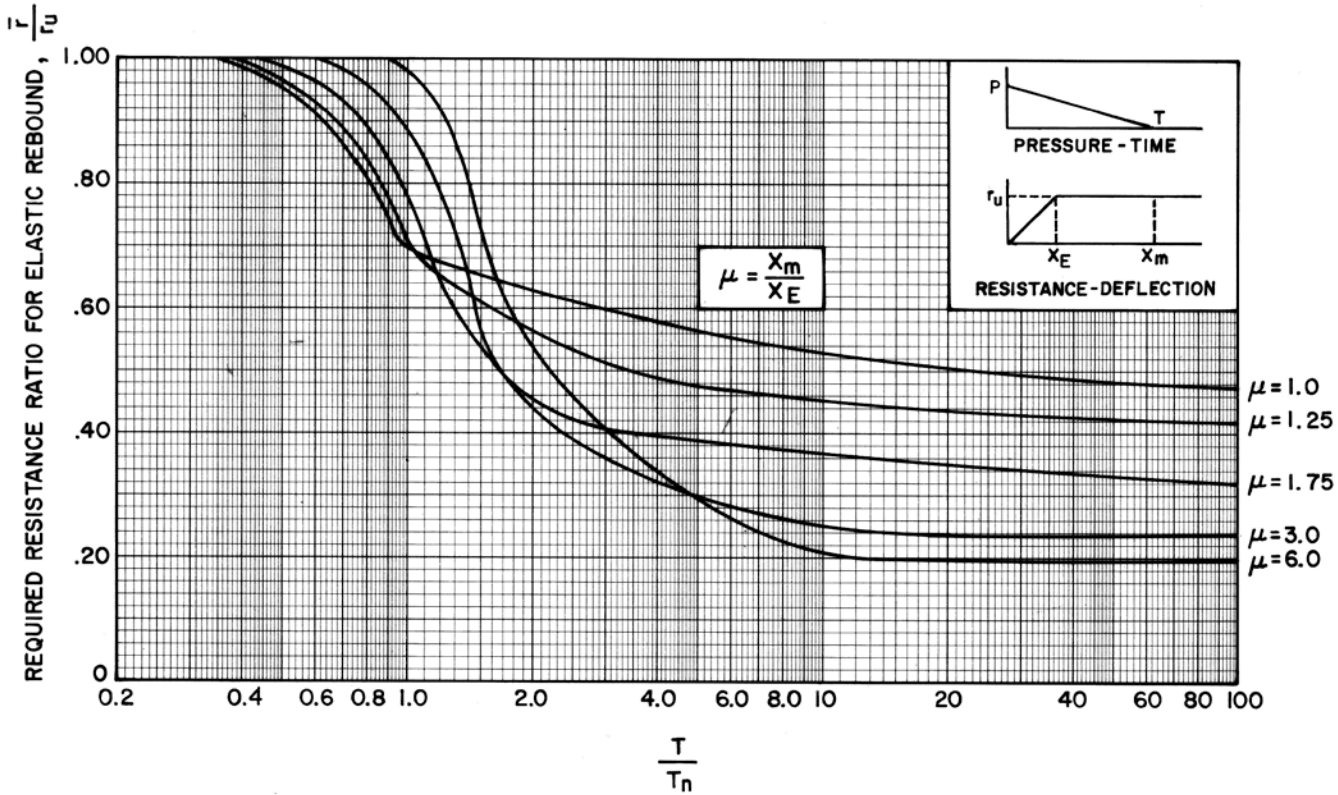

Figure 5-14 Allowable Dynamic (Design) Shear Stresses for Webs of Cold-Formed Members (f_{ds} = 44 ksi)

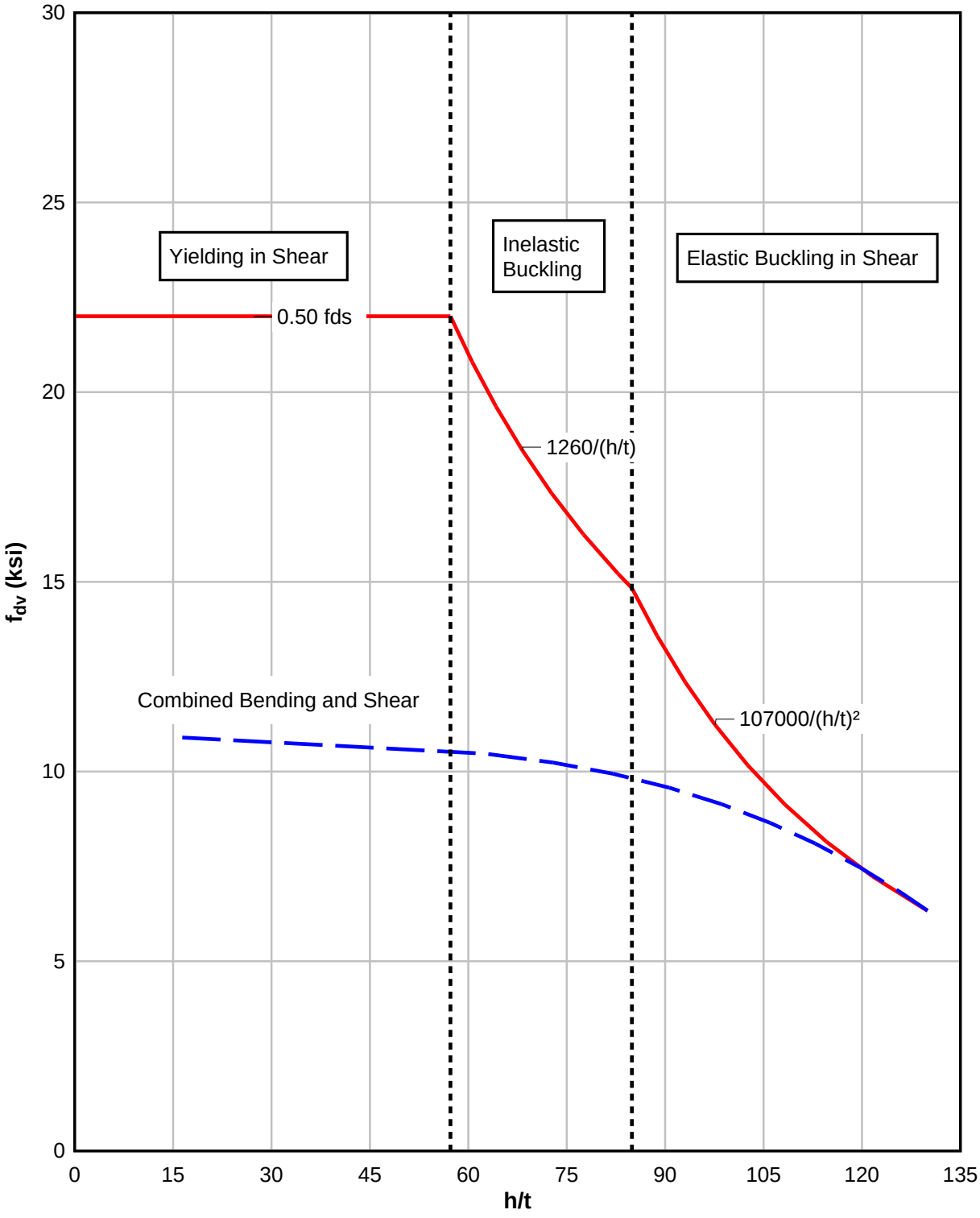

Figure 5-15 Maximum End Support Reaction for Cold-Formed Steel Sections (f_{ds} = 44 ksi)

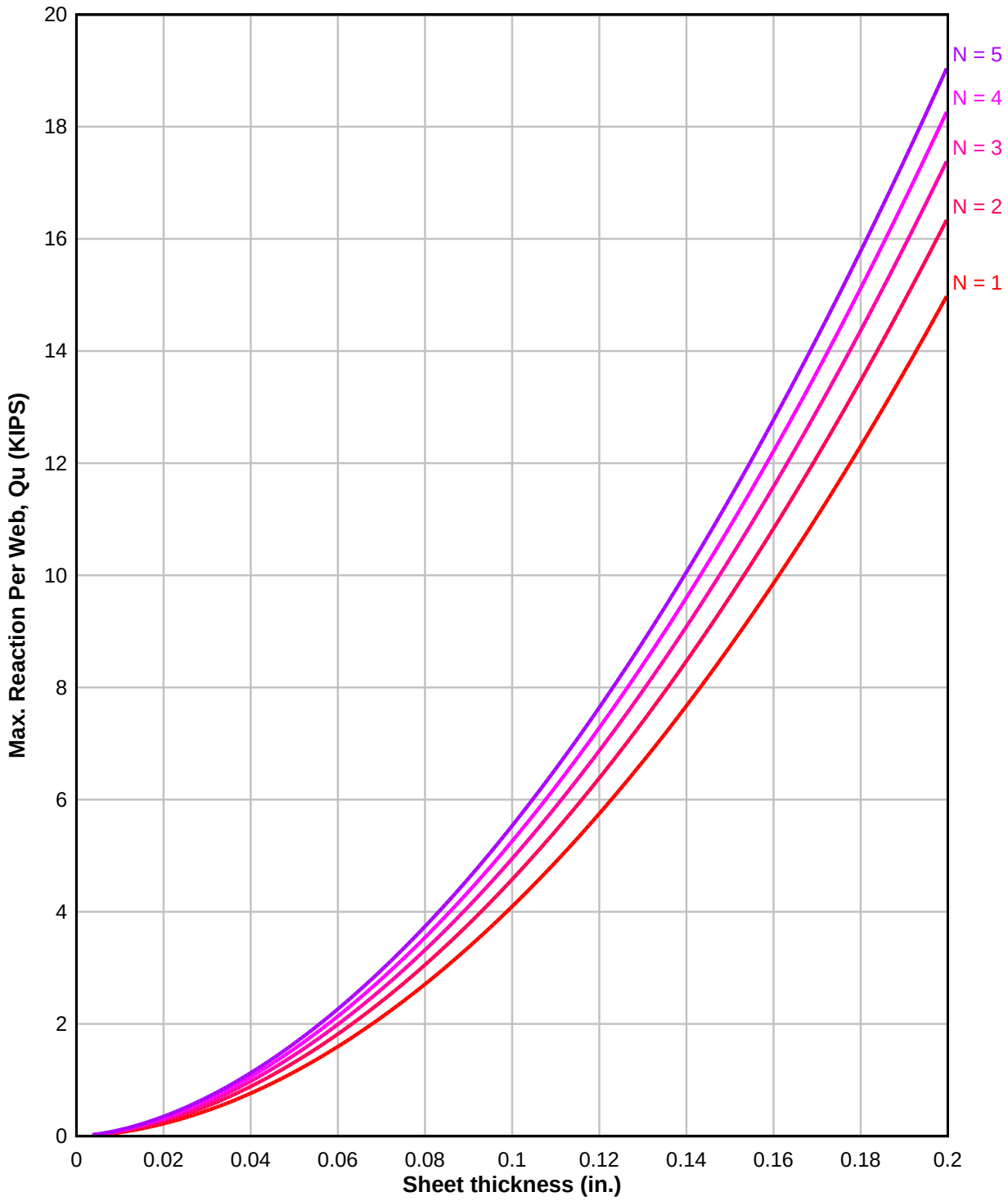

Figure 5-16 Maximum Interior Support Reaction for Cold-Formed Steel Sections (f_{ds} = 44 ksi)

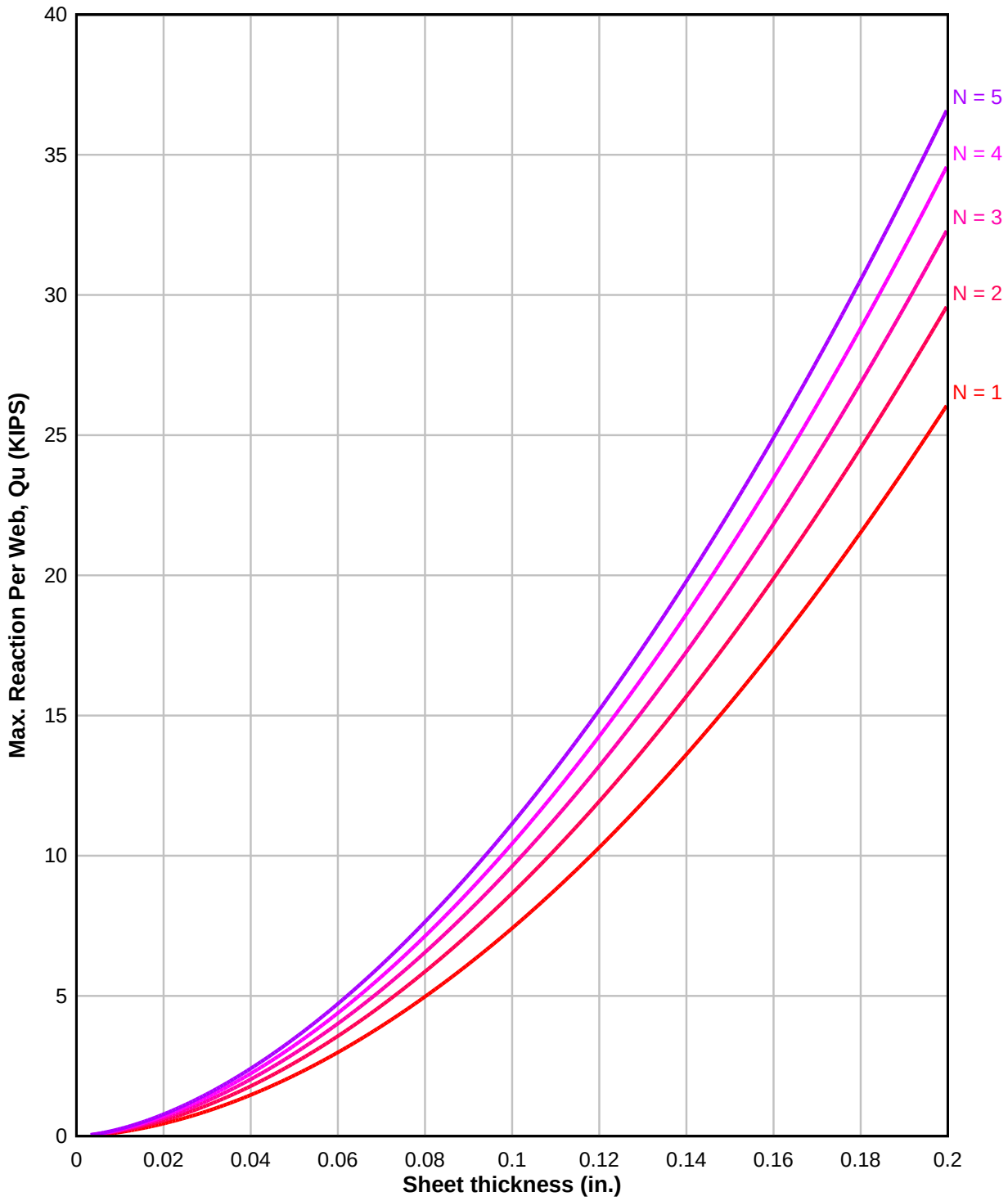

Table 5-5 Dynamic Design Shear Stress for Webs of Cold-Formed Members (f_{ds} = 44 ksi)

(a) Simple Shear

h*/*t	f_{dv} **(ksi)**
$(h/t) \leq 57$	$0.50\ f_{ds} \leq 22.0$
$57 < (h/t) \leq 83$	$1.26 \times 10^3 / (h/t)$
$83 < (h/t) \leq 150$	$1.07 \times 10^5 / (h/t)$

(b) Combined Bending and Shear

h*/*t	f_{dv} **(ksi)**
20	10.94
30	10.84
40	10.72
50	10.57
60	10.42
70	10.22
80	9.94
90	9.62
100	9.00
110	8.25
120	7.43

Table 5-6 Dynamic Design Shear Stress for Webs of Cold-Formed Members (f_{ds} = 66 ksi)

(a) Simple Shear

h*/*t	f_{dv} **(ksi)**
$(h/t) \leq 47$	$0.50\ f_{ds} \leq 33.0$
$47 < (h/t) \leq 67$	$1.54 \times 10^3 / (h/t)$
$67 < (h/t) \leq 150$	$1.07 \times 10^5 / (h/t)$

(b) Combined Bending and Shear

h*/*t	f_{dv} **(ksi)**
20	16.41
30	16.23
40	16.02
50	15.75
60	15.00
70	14.20
80	13.00
90	11.75
100	10.40
110	8.75
120	7.43

Table 5-7 Dynamic Design Shear Stress for Webs of Cold-Formed Members (f_{ds} = 88 ksi)

(a) Simple Shear

h*/*t	**f_{dv} (ksi)**
$(h/t) \leq 41$	$0.50\ f_{ds} \leq 44.0$
$41 < (h/t) \leq 58$	$1.78 \times 10^3 / (h/t)$
$58 < (h/t) \leq 150$	$1.07 \times 10^5 / (h/t)$

(b) Combined Bending and Shear

h*/*t	**f_{dv} (ksi)**
20	21.60
30	21.00
40	20.00
50	18.80
60	17.50
70	16.00
80	14.30
90	12.50
100	10.75
110	8.84
120	7.43

Table 5-8 Summary of Deformation Criteria

Element	Highest level of Protection (Category No.)*	Additional Specifications	Deformation Type**	Maximum Deformation
Beams, purlins, spandrels or girts	1		Θ μ	2° 10
	2		Θ μ	12° 20
Frame structures	1		δ Θ †	H/25 2°
Cold-formed steel floor and wall panels	1	Without tension-membrane action	Θ μ	1.25° 1.75
		With tension-membrane action	Θ μ	4° 6
Open-web joists	1		Θ μ	2° 4
		Joists controlled by shear	Θ μ	1° 1
Plates	1		Θ μ	2° 10
	2		Θ μ	12° 20

Θ = *maximum member end rotation (degrees) measured from the chord joining the member ends*
δ = *relative sidesway deflection between stories*
H = *story height*
μ = *ductility ratio* (X_m / X_E)

* As defined in Chapter 1.

** Whichever governs.

† Individual frame member.

SPECIAL CONSIDERATIONS, BLAST DOORS

5-36 BLAST DOOR DESIGN.

5-36.1 General.

This section outlines procedures for the design of steel blast doors. Analytical procedures for the design of the individual elements of the blast door plate have been presented in earlier sections of this chapter. In addition to the door plate, door frames and anchorage, reversal bolts, gaskets and door operators are discussed. Blast doors are categorized by their functional requirements and method of opening.

5-36.2 Functions and Methods of Opening.

5-36.2.1 Functional Requirements.

Blast doors may be designed to contain an accidental explosion from within a structure so as to prevent pressure and fireball leakage and fragment propagation. Blast doors may also be designed to protect personnel and/or equipment from the effects of external blast loads. In this case, a limited amount of blast pressures may be permitted to leak into the protected area. In most cases, blast doors may be designed to protect the contents of a structure, thereby negating propagation when explosives are contained within the shelter.

5-36.2.2 Method of Opening.

Blast doors may be grouped based on their method of opening, such as: (a) single leaf, (b) double leaf, (c) vertical lift, and (d) horizontal sliding.

5-36.3 Design Considerations.

5-36.3.1 General.

The design of a blast door is intrinsically related to its function during and/or after an explosion. Design considerations include whether or not the door should sustain permanent deflections, whether rebound mechanisms or fragment protection is required, and whether pressure leakage be tolerated. Finally, the design pressure range may dictate the type of door construction that is to be used, including solid steel plate or built-up doors.

5-36.3.2 Deflections.

As stated in Section 5-16.7, plates can sustain a support rotation of 12 degrees without failing. This is applicable to blast doors providing that the resulting plate deflection does not collapse the door by pushing it through the opening. However, deflections may have to be limited if the mechanism used to open the door after an explosion is required to function. In addition, if a blast door is designed with a gasket so as to fully or nearly contain the pressure and fireball effects of an explosion, then deflections should be limited in order to ensure satisfactory performance of the gasket.

5-36.3.3 Rebound Mechanisms.

Steel doors will be subjected to relatively large stress reversals caused by rebound. Blast doors may have to transfer these reversal loads by means of retracting pins or "reversal bolts." These heads can be mounted on any edge (sides, top, or bottom) of a doorplate. Reversal bolts can be designed as an integral part of the panic hardware assembly or, if tapered, they can be utilized in compressing the gasket around a periphery. The magnitude of the rebound force acting on the blast doors is discussed later.

5-36.3.4 Fragment Protection.

A plate-type blast door, or the plate(s) of a built-up blast door may be sized to prevent fragment penetration. However, when the blast door is subjected to large blast loads and fragments, a supplementary fragment shield may be necessary since the combined effects of the fragments and pressures may cause premature door failure due to the notching effects produced by the fragments. Procedures for predicting the characteristics of primary fragments such as impact, velocity, and size of fragment are presented in Chapter 2. Methods for determining the depth of penetration of fragments into steel are given in Section 5-49.

5-36.3.5 Leakage Protection (Gaskets).

Blast doors may be designed to partly or fully contain the pressure and fireball effects of an explosion in which case gaskets may have to be utilized around the edge of a door or its opening. A sample of a gasket is illustrated in Figure 5-17 (+). This gasket will have to be compressed by means of a hydraulic operator which is capable of overcoming a force of 125 pounds per linear inch of the gasket. This gasket is made of neoprene conforming to the material callouts in Note 2 of Figure 5-17 for the current version of ASTM D 2000.

5-36.3.6 Type of Construction.

Blast doors are formed from either solid steel plate or built-up steel construction.

Solid steel plate doors are usually used for the high pressure ranges (50 psi or greater) and where the door span is relatively short. Depending on plate thicknesses, these doors may be used when fragment impact is critical. These plates can range in thickness of 1-inch or greater. For thick plates, connections using high strength bolts or socket head cap screws are recommended in lieu of welding. However, the use of bolts or screws must preclude the passage of leakage pressures into or out of the structure depending on its use.

Built-up doors are used usually for the low pressure range and where long spans are encountered. A typical built-up blast door may consist of a peripheral frame made from steel channels with horizontal channels serving as intermediate supports for the interior and/or exterior steel cover plates. The pressure loads must be transferred to the

channels via the plate. Concrete or some other material may be placed between the plates in order to add mass to the door or increase its fragment resistance capabilities.

5-36.4 Examples of Blast Door Designs.

5-36.4.1 General.

In order to illustrate the relationship between the function of a blast door and its design considerations, four examples are presented in the following section. Table 5-9 (+) lists the design requirements of each of the above door examples.

5-36.4.2 Door Type A (Figure 5-18 (+)).

This blast door is designed to protect personnel and equipment from external blast pressures resulting from an accidental explosion. The door opening measures 8-feet high by 8-feet wide. It is a built-up double-leaf door consisting primarily of an exterior plate and a thinner interior plate both welded to a grid formed by steel tubes. Support rotations of each element (plate, channel, tube) have been limited to 2 degrees in order to assure successful operation of the panic hardware at the door interior. The direct blast load is transferred from the exterior plate to tubular members which form the door grid. The grid then transfers the loads to the door frame at the center of the opening through a set of pins attached to the top and bottom of the center mullions of the grid. At the exterior, the loads are transferred to the frame through the hinges which are attached to the exterior mullions and the frame. The reversal loads are also transferred by the pins and by the built-up door hinges. The center pins are also operated by the panic hardware assembly.

5-36.4.3 Door Type B (Figure 5-19 (+)).

This blast door is designed to prevent propagation from an accidental explosion into an explosives storage area. It is a built-up, sliding door protecting an opening 11-feet high by 16-feet wide, consisting of an exterior plate and a thinner interior plate. These plates are welded to vertical S-shapes which are spaced at 15-inch intervals. This door is designed to act as a one-way member, spanning vertically. Since flange buckling of the S-shapes is prohibited in the presence of the outer and inner plates acting as braces, the composite beam-plate arrangement is designed for a support rotation of 12 degrees. The yield capacity of the webs of the S-shapes in shear (Equation 5-16), as well as web crippling (Section 5-25), had to be considered in the design. This door has not been designed to resist reversal or rebound forces.

5-36.4.4 Door Type C (Figure 5-20 (+)).

This single-leaf blast door is designed as part of a containment cell which is used in the repeated testing of explosives. The door opening measures 4-feet 6-inches wide by 7-feet 6-inches high. It is the only door, in these samples, designed elastically since it is subjected to repeated blast loads. It consists primarily of a thick steel door plate protected from test fragments by a mild steel fragment shield. It is designed as a simply-supported (four sides) plate for direct internal loads and as a one-way element spanning

the door width for rebound loads. It is equipped with a neoprene gasket around the periphery (Figure 5-17 (+)) as well as a series of six reversal bolts designed to transfer the rebound load into the door frame. The large thickness of the door plate warrants the use of high-strength, socket head cap screws in lieu of welding to connect the plate to the reversal bolt housing as well as to the fragment shield.

5-36.4.5 Door Type D (Figure 5-21 (+)).

This single-leaf blast door is designed as part of a containment structure which is used to protect nearby personnel and structures in the event of an accidental explosion. The door opening measures 4-feet wide by 7-feet high. It is designed as simply-supported on four sides for direct load and as a one-way element spanning the door width for rebound loads. It is equipped with a neoprene gasket around the periphery and a series of six reversal bolts which transfer the rebound load to the door frame. The reversal bolt housing and bearing blocks are welded to the door plate. Excessive deflections of the door plate under blast loading would hamper the sealing capacity of the gasket. Consequently, the door plate design rotation is limited to 2 degrees.

5-36.4.6 Other Types of Doors.

Another type of blast door design is a steel arch or "bow" door. The tension arch door requires compression ties to develop the compression reactions from the arch. The compression arch door requires tension members to develop the tension reactions from the arch. These doors are illustrated in Figure 5-42 (+).

5-36.5 Blast Door Rebound.

Plate or element rebound can be determined for a single-degree-of-freedom system subjected to a triangular pulse (see Figure 5-13 (+)). However, when a system is subjected to a bilinear load, only a rigorous, step-by-step dynamic analysis can determine the percentage of elastic rebound. In lieu of a rigorous analysis, a method of determining the upper bound on the rebound force is presented here.

Three possible rebound scenarios are discussed. Figure 5-22 (+) is helpful in describing each case.

(a) Case I - Gas load not present ($P_{gas} = 0$). In this case, the required rebound resistance is obtained from Figure 5-13 (+).

(b) Case II - $t_m \leq t_i$ In this case, the required rebound resistance is again obtained from Figure 5-10 (+). This procedure, however, can overestimate the rebound load.

(c) Case III - $t_m > t_i$ Figure 5-22 (+) illustrates the case whereby the time to reach the peak response, t_m, is greater than the point where the gas load begins to act (t_i). Assuming that the gas pressure can be considered constant over a period of time, it will act to lower the required rebound resistance since

the resistance time curve will oscillate about the gas pressure time curve. In this case, the upper bound for the required rebound resistance is:

$$\bar{r} = r_u - P_{gas} \qquad 5\text{-}40$$

However, in all three cases, it is recommended that the required rebound resistance be at least equal to 50 percent of the peak positive door response.

5-36.6 Methods of Design.

5-36.6.1 General.

Techniques used for the design of two types of blast doors will be demonstrated. The first technique is used for the door illustrated in Figure 5-18 (+) while the second is used for the door shown in Figure 5-21 (+). Detailed procedures for the design of plate and beam elements, as well as the related design criteria, are presented in earlier section of this chapter and numerical examples are presented in Appendix A.

5-36.6.2 Built-up Door.

The built-up steel door shown in Figure 5-18 (+) is constructed by welding the steel plates to the steel tubular grid (fillet welded to the exterior plate and plug-welded to the interior plate). The heavy exterior plate is designed as a continuous member supported by the tubes. The horizontal tubes, in turn, are designed as simply supported members, transferring load to the vertical tubes. The interior tubes are also designed as simply supported elements which transfer the direct and rebound loads to the pins while the side tubes transfer the direct load to the door frame proper and rebound loads to the hinges. The exterior tubes are also designed as simply supported elements with the supports located at the hinges.

5-36.6.3 Solid Steel Plate Door.

The steel plate of the blast door shown in Figure 5-21 (+) is initially sized for blast pressures since no high speed fragments will be generated in the facility. The plate is sized for blast loading, considering the plate to be simply supported on four edges. The direct load is transferred to the four sides of the door frame. In rebound, the plate acts as a simple beam spanning the width of the door opening. The rebound force is transferred to the six reversal bolts and then into the door frame. The door frame, as illustrated in Figure 5-19 (+), consists of two units; the first unit is imbedded into the concrete and the second unit is attached to the first one. This arrangement allows the first frame to be installed in the concrete wall prior to the fabrication of the door. After the door construction is completed, the subframe is attached to the embedded frame and, thus, the door installation is completed.

Figure 5-17 Gasket Detail for Blast Door

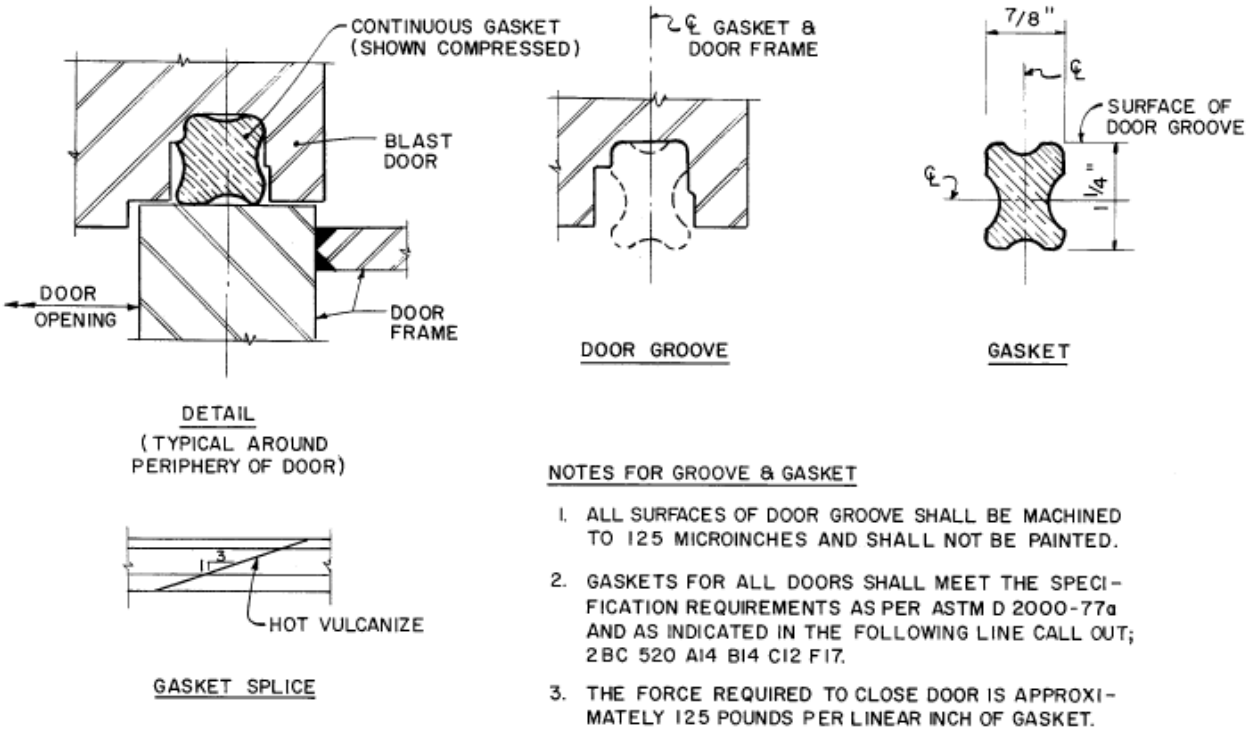

NOTES FOR GROOVE & GASKET

1. ALL SURFACES OF DOOR GROOVE SHALL BE MACHINED TO 125 MICROINCHES AND SHALL NOT BE PAINTED.
2. GASKETS FOR ALL DOORS SHALL MEET THE SPECIFICATION REQUIREMENTS AS PER ASTM D 2000-77a AND AS INDICATED IN THE FOLLOWING LINE CALL OUT; 2BC 520 A14 B14 C12 F17.
3. THE FORCE REQUIRED TO CLOSE DOOR IS APPROXIMATELY 125 POUNDS PER LINEAR INCH OF GASKET.

Figure 5-18 Built-up Double-Leaf Blast Door with Frame Built into Concrete

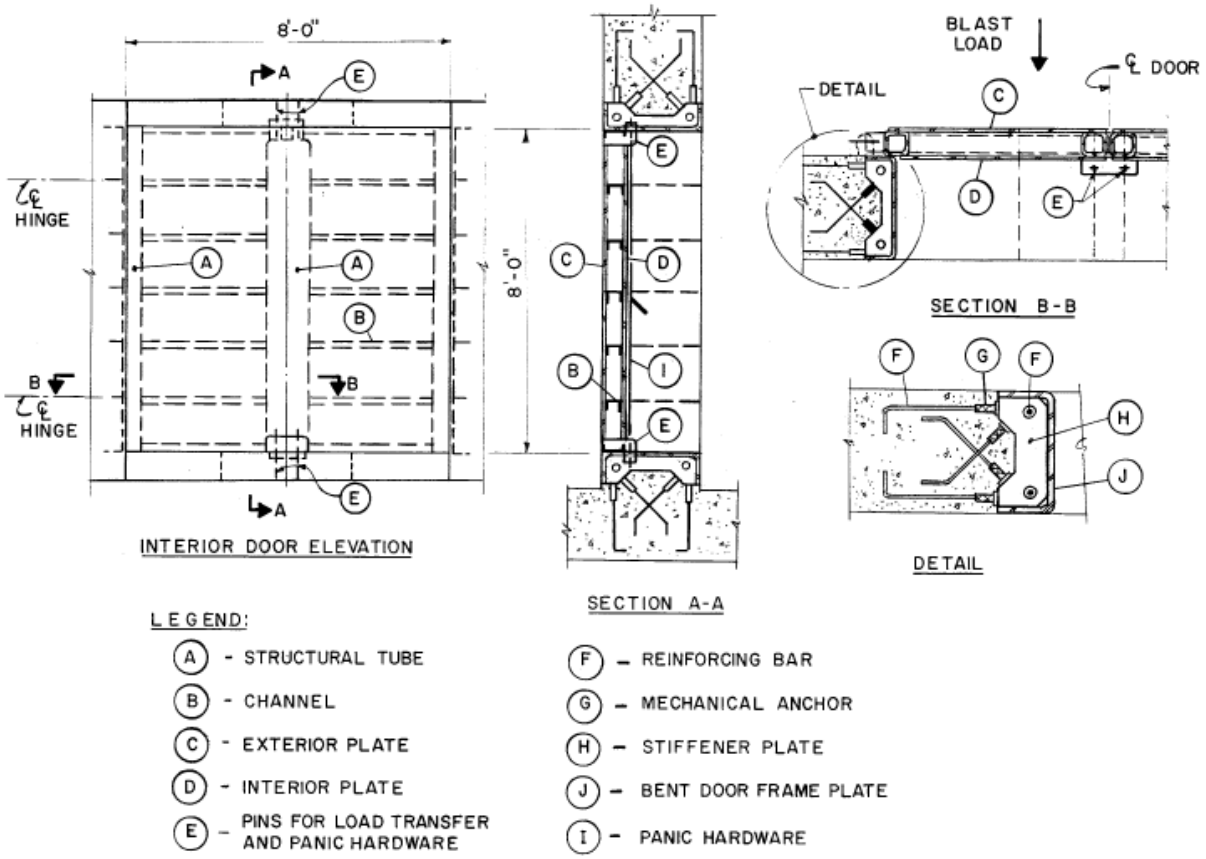

Figure 5-19 Horizontal Sliding Blast Door

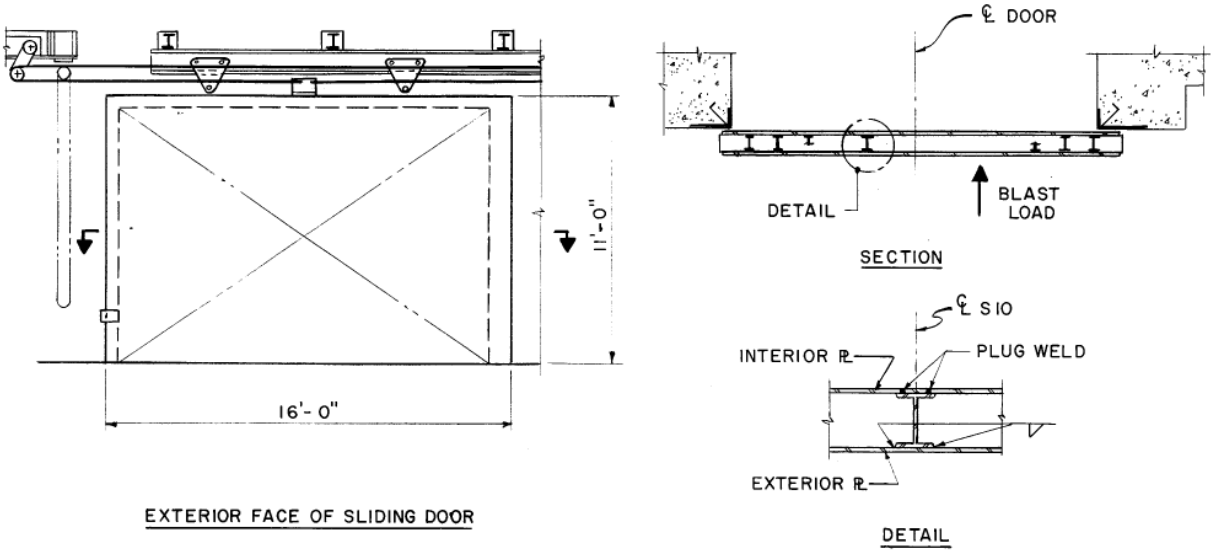

Figure 5-20 Single-Leaf Blast Door With Fragment Shield (Very High Pressure)

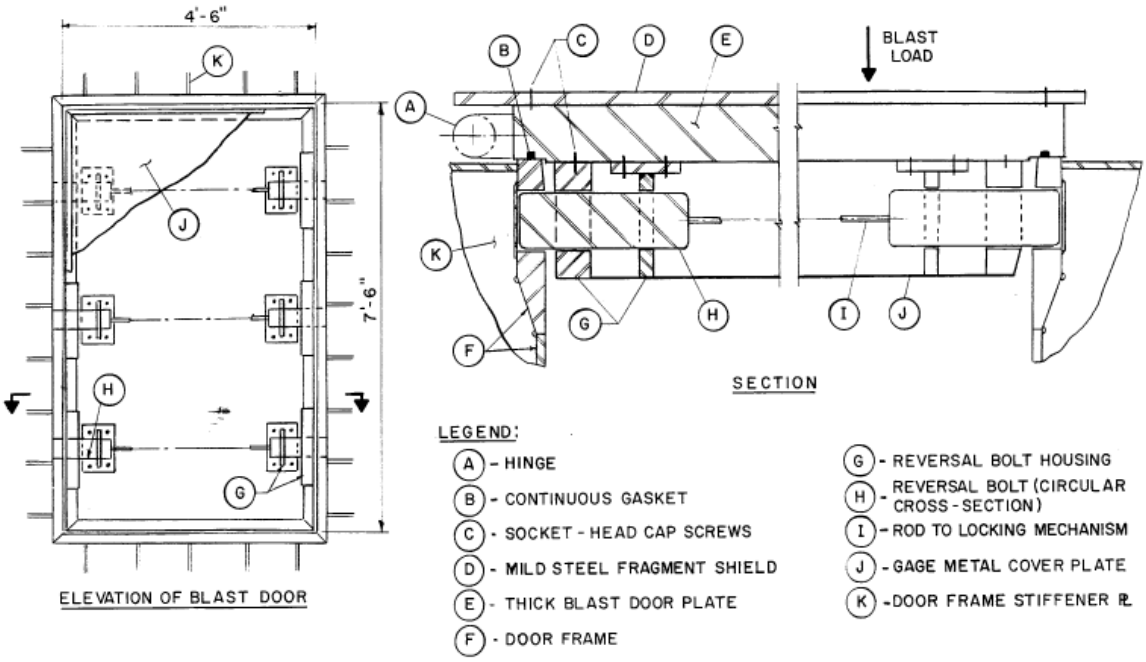

Figure 5-21 Single Leaf Blast Door (High Pressure)

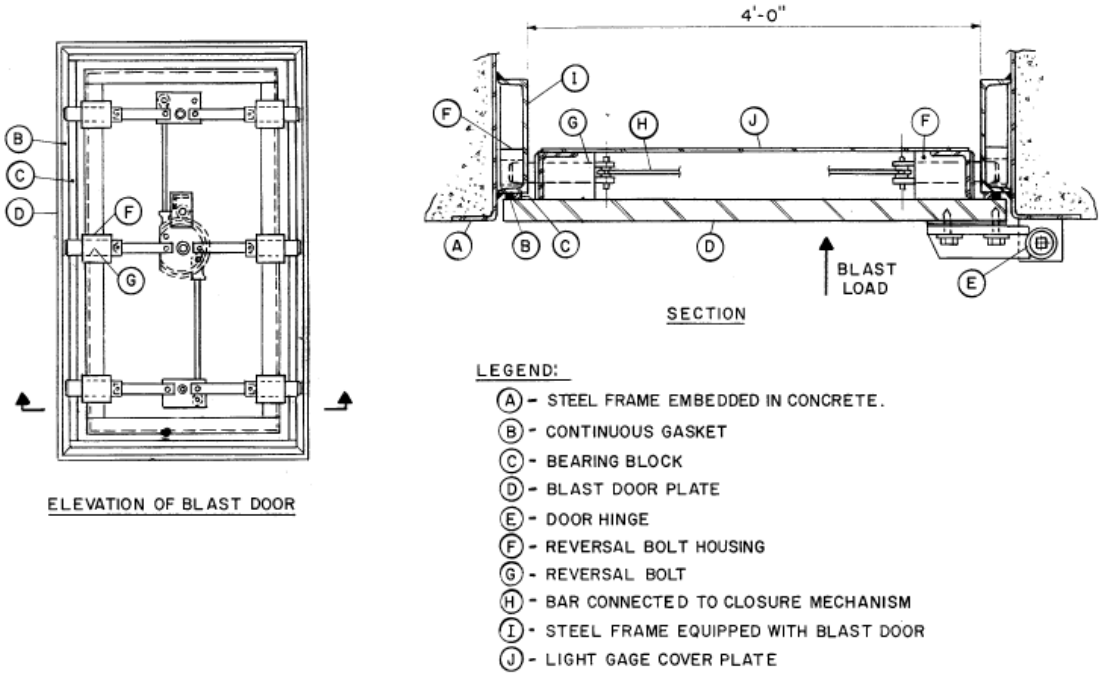

Figure 5-22 Bilinear Blast Load and Single-Degree-of-Freedom Response for Determining Rebound Resistance

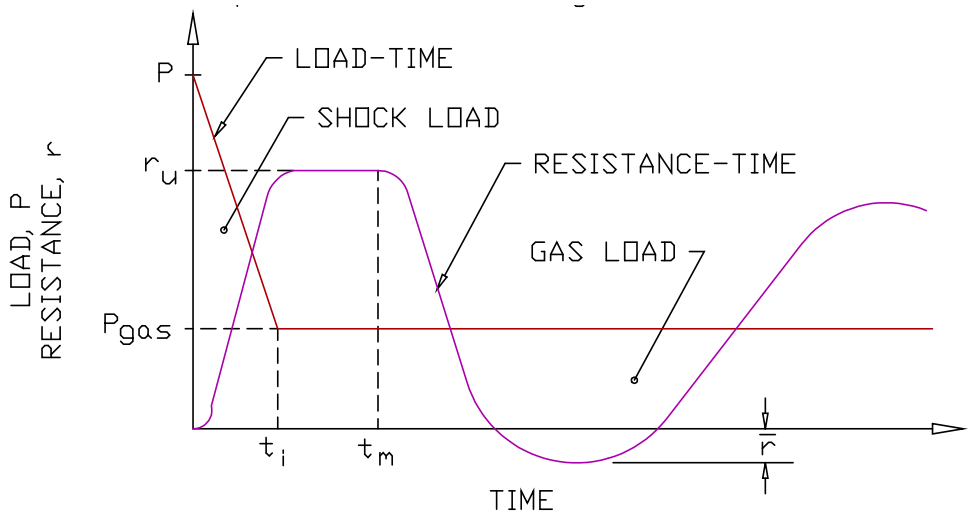

P = PEAK LOAD

P_{gas} = GAS PRESSURE

r_u = PEAK POSITIVE RESPONSE

$\bar{r}$ = REQUIRED REBOUND RESISTANCE

t_i = TIME AT WHICH SHOCK AND GAS LOADS INTERSECT

t_m = TIME TO REACH MAXIMUM RESPONSE

Table 5-9 Design Requirements for Sample Blast Doors

Door Description			Design Requirements								
			Permanent Deflections			Rebound Mechanisms		Fragment Protection		Level of Leakage Protection Required	
Door	Figure	Method of Opening	None	Limited	Large	Yes	No	Yes	No	Low	High
A	5-18 (+)	Double-Leaf		X		X			X	X	
B	5-19 (+)	Sliding			X		X		X	X	
C	5-20 (+)	Single-Leaf	X			X		X			X
D	5-21 (+)	Single-Leaf		X		X		X			X

COLUMNS AND BEAM COLUMNS

5-37 PLASTIC DESIGN CRITERIA.

5-37.1 General.

The design criteria for columns and beam columns must account for their behavior not only as individual members but also as members of the overall frame structure. Depending on the nature of the loading, several design cases may be encountered. Listed below are the necessary equations for the dynamic design of steel columns and beam columns.

5-37.2 In-plane Loads.

In the plane of bending of compression members which would develop a plastic hinge at ultimate loading, the slenderness ratio *l/r* shall not exceed the constant (C_c) defined as:

$$C_c = (2\pi^2 E/f_{ds})^{1/2} \qquad 5\text{-}41$$

where,

E = *modulus of elasticity of steel (psi)*
f_{ds} = *dynamic design stress (see Section 5-13)*

The ultimate strength of an axially loaded compression member shall be taken as:

$$P_u = 1.7AF_a \qquad 5\text{-}42$$

where

A = *gross area of member,*

$$F_a = \frac{\left(1-(Kl/r)^2/2C_c^{\,2}\right)f_{ds}}{5/3+3(Kl/r)/(8C_c)-(Kl/r)^3/(8C_c^{\,3})}, \text{ and} \qquad 5\text{-}43$$

Kl/r = *largest effective slenderness ratio listed in Table 5-10 (+) or Table 5-11 (+)*

5-37.3 Combined Axial Loads and Biaxial Bending.

Members subject to combined axial load and biaxial bending moment should be proportioned so as to satisfy the following set of interaction formulas:

$$P/P_u + C_{mx}M_x/[(1 - P/P_{ex})M_{mx}] + C_{my}M_y/[(1 - P/P_{ey})M_{my}] \leq 1.0 \qquad 5\text{-}44$$

$$P/P_p + M_x/(1.18M_{px}) + M_y/(1.18M_{py}) \leq 1.0 \text{ for } P/P_p \geq 0.15 \qquad 5\text{-}45$$

or

$$M_x / M_{px} + M_y / M_{py} \leq 1.0 \text{ for } P/P_p < 0.15 \qquad 5\text{-}46$$

where

M_x, M_y = *maximum applied moments about the x- and y-axes*
P = *applied axial load*
P_{ex} = $23/12(AF'_{ex})$
P_{ey} = $23/12(AF'_{ey})$
F'_{ex} = $12\pi^2E/[23(Kl_b/r_x)^2]$
F'_{ey} = $12\pi^2E/[23(Kl_b/r_y)^2]$
l_b = *actual unbraced length in the plane of bending*
r_x, r_y = *corresponding radii of gyration*
P_p = Af_{ds}
C_{mx}, C_{my} = *coefficients applied to bending term in interaction formula and dependent upon column curvature caused by applied moments (AISC Specification, Section 1.6.1)*
M_{px}, M_{py} = *plastic bending capacities about x and y axes* ($M_{px} = Z_xf_{ds}$, $M_{py} = Z_yf_{ds}$)
M_{mx}, M_{my} = *moments that can be resisted by the member in the absence of axial load*

For columns braced in the weak direction, $M_{mx} = M_{px}$ and $M_{my} = M_{py}$.

When columns are unbraced in the weak direction:

$$M_{mx} = [1.07 - (l/r_y)\,(f_{ds})^{1/2}/3160]\,M_{px} \leq M_{px} \qquad 5\text{-}47$$

$$M_{my} = [1.07 - (l/r_x)\,(f_{ds})^{1/2}/3160]\,M_{py} \leq M_{py} \qquad 5\text{-}48$$

Subscripts *x* and *y* indicate the axis of bending about which a particular design property applies. Also, columns may be considered braced in the weak direction when the provisions of Section 5-26 are satisfied. In addition, beam columns should also satisfy the requirements of Section 5-23.

5-38 EFFECTIVE LENGTH RATIOS FOR BEAM-COLUMNS.

The basis for determining the effective lengths of beam columns for use in the calculation of P_u, P_{ex}, M_{mx}, and M_{my} in plastic design is outlined below.

For plastically designed braced and unbraced planar frames which are supported against displacement normal to their planes, the effective length ratios in Table 5-10 (+) and Table 5-11 (+) shall apply.

Table 5-10 (+) corresponds to bending about the strong axis of a member, while Table 5-11 (+) corresponds to bending about the weak axis. In each case, l is the distance between points of lateral support corresponding to r_x or r_y, as applicable. The effective length factor, *K*, in the plane of bending shall be governed by the provisions of Section 5-39.

For columns subjected to biaxial bending, the effective lengths given in Table 5-10 (+) and Table 5-11 (+) apply for bending about the respective axes, except that P_u for unbraced frames shall be based on the larger of the ratios Kl/r_x or Kl/r_y. In addition, the larger of the slenderness ratios, l/r_x or l/r_y, shall not exceed C_c.

5-39 EFFECTIVE LENGTH FACTOR, *K*.

In plastic design, it is usually sufficiently accurate to use the *K* factors from Table C1.8.1 of the AISC Manual (reproduced here as Table 5-12 (+)) for the condition closest to that in question rather than to refer to the alignment chart (Chapter C of the AISC Manual). It is permissible to interpolate between different conditions in Table 5-12 using engineering judgment. In general, a design value of *K* equal to 1.5 is conservative for the columns of unbraced frames when the base of the column is assumed pinned, since conventional column base details will usually provide partial rotational restraint at the column base. For girders of unbraced frames, a design *K* value of 0.75 is recommended.

Table 5-10 Effective Length Ratios for Beam Columns (Webs of members in the plane of the frame; i.e., bending about the strong axis)

Braced Planar Frames*	One-and Two-Story Unbraced Planar Frames*
P_u Use larger ratio, l/r_y or l/r_x	Use larger ratio, l/r_y or Kl/r_x
P_{ex} Use l/r_x	Use Kl/r_x
M_{mx} Use l/r_y	Use l/r_y

* l/r_x shall not exceed C_c.

Table 5-11 Effective Length Ratios for Beam Columns (Flanges of members in the plane of the frame: i.e., bending about the weak axis)

Braced Planar Frames*	One- and Two-Story Unbraced Planar Frames*
P_u Use larger ratio, l/r_y or l/r_x	Use larger ratio, l/r_x or Kl/r_y
P_{ey} Use l/r_y	Use Kl/r_y
M_{my} Use l/r_x	Use l/r_x

* l/r_y shall not exceed C_c.

Table 5-12 Effective Length Factors for Columns and Beam-Columns

	(a)	(b)	(c)	(d)	(e)	(f)
Buckled shape of column is shown by dashed line.					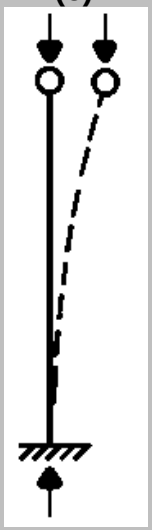	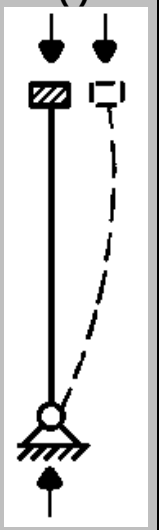
Theoretical K value	0.5	0.7	1.0	1.0	2.0	2.0
Recommended design value when ideal conditions are approximated	0.65	0.80	1.2	1.0	2.10	2.0
End condition code		Rotation fixed and translation fixed.				
		Rotation free and translation fixed.				
		Rotation fixed and translation free.				
		Rotation free and translation free.				

FRAME DESIGN

5-40 GENERAL.

The dynamic plastic design of frames for blast resistant structures is oriented toward industrial building applications common to ammunition manufacturing and storage facilities, i.e., relatively low, single-story, multi-bay structures. This treatment applies principally to acceptor structures subjected to relatively low blast overpressures.

The design of blast resistant frames is characterized by (a) simultaneous application of vertical and horizontal pressure-time loadings with peak pressures considerably in excess of conventional loads, (b) design criteria permitting inelastic local and overall dynamic structural deformations (deflections and rotations), and (c) design requirements dictated by the operational needs of the facility and the need for reusability with minor repair work after an incident must be considered.

Rigid frame construction is recommended in the design of blast resistant structures since this system provides open interior space combined with substantial resistance to lateral forces. In addition, this type of construction possesses inherent energy absorption capability due to the successive development of plastic hinges up to the ultimate capacity of the structure. However, where the interior space and wall opening requirements permit, it may be as effective to provide bracing.

The particular objective in this section is to provide rational procedures for efficiently performing the preliminary design of blast resistant frames. Rigid frames as well as frames with supplementary bracing and with rigid or nonrigid connections are considered. In both cases, preliminary dynamic load factors are provided for establishing equivalent static loads for both the local and overall frame mechanism. Based upon the mechanism method, as employed in static plastic design, estimates are made for the required plastic bending capacities as well as approximate values for the axial loads and shears in the frame members. The dynamic deflections and rotations in the sidesway and local beam mechanism modes are estimated based upon single degree-of-freedom analyses. The design criteria and the procedures established for the design of individual members previously discussed apply for this preliminary design procedure.

In order to confirm that a trial design meets the recommended deformation criteria of Table 5-8 (+) and to verify the adequacy of the member sizes established on the basis of estimated dynamic forces and moments, a rigorous frame analysis should be performed. This analysis should consider the moments produced by the axial load deflection *P*-delta effects in determining the sizes of individual elements. The use of computer programs for dynamic analysis of multi-degree-of-freedom, nonlinear dynamic analyses of steel frame structures is discussed in Section 5-10. These programs have the capability of performing a multi-degree-of-freedom, nonlinear, dynamic analysis of braced and unbraced, rigid and nonrigid frames of one or more story structures.

5-41 TRIAL DESIGN OF SINGLE-STORY RIGID FRAMES.

5-41.1 Collapse Mechanisms.

General expressions for the possible collapse mechanism of single-story rigid frames are presented in Table 5-13 (+) for pinned and fixed base frames subjected to combined vertical and horizontal blast loads.

The objective of this trial design is to proportion the frame members such that the governing mechanism represents an economical solution. For a particular frame, the ratio of horizontal to vertical peak loading denoted by α is influenced by the horizontal frame plan of the structure and is determined as follows:

$$\alpha = q_h / q_v \qquad 5\text{-}49$$

where

q_v = $p_v b_v$ = *peak vertical load on rigid frame*
q_h = $p_h b_h$ = *peak horizontal load on rigid frame*
p_v = *blast overpressure on roof*
p_h = *reflected blast pressure on front wall*
b_v = *tributary width for vertical loading*
b_h = *tributary width for horizontal loading*

The orientation of the roof purlins with respect to the blast load directions are shown in

Figure 5-23 (+). The value of α will usually lie in the range from about 1.8 to 2.5 when the direction of the blast load is perpendicular to the roof purlins. In this case, the roof purlins are supported by the frame and the tributary width is the same for the horizontal and vertical load. The value of α is much higher when the direction of the blast load is parallel to the roof purlins. In this case, the roof purlins are not supported by the girder of the frame and the tributary width of the vertical loading (b_v = purlin spacing) is much smaller than the tributary width of the horizontal loading (b_h = frame spacing).

It is assumed in this procedure that the plastic bending capacity of the roof girder, M_p, is constant for all bays. The capacity of the exterior and interior columns are taken as CM_p and C_1M_p, respectively. Since the exterior column is generally subjected to reflected pressures, it is recommended that a value of C greater than 1.0 be selected. In analyzing a given frame with certain member properties, the controlling mechanism is the one with the lowest resistance. In design, however, the load is fixed and the required design plastic moment is the largest M_p value obtained from all possible mechanisms. For that purpose, C and C_1 should be selected so as to minimize the value of the maximum required M_p from among all possible mechanisms. After a few trials, it will become obvious which choice of C and C_1 tends to minimize the largest value of M_p.

5-41.2 Dynamic Deflections and Rotations.

It will normally be more economical to proportion the members so that the controlling failure mechanism is a combined mechanism rather than a beam mechanism. The mechanism having the least resistance constitutes an acceptable mode of failure provided that the magnitudes of the maximum deflections and rotations do not exceed the maximum values recommended in Table 5-8 (+).

5-41.3 Dynamic Load Factors.

To obtain initial estimates of the required mechanism resistance, the dynamic load factors listed in this section may be used to obtain equivalent static loads for the indicated mechanisms. These load factors are necessarily approximate and make no distinction for different end conditions. However, they are expected to result in reasonable estimates of the required resistance for a trial design. Once the trial member sizes are established, then the natural period and deflection of the frame can be calculated.

It is recommended that the DLF for a beam collapse mechanism be equal to 1.25 while that for a panel or combined collapse mechanism be equal to 0.625. The DLF for a frame is lower than that for a beam mechanism, since the natural period of vibration in the sidesway mode will normally be much greater than the natural periods of vibration of the individual elements.

5-41.4 Loads in Frame Members.

Estimates of the peak axial forces in the girders and the peak shears in the columns are obtained from Figure 5-24 (+). In applying the values of Figure 5-24, the equivalent horizontal static load shall be computed using the dynamic load factor for a panel or combined sidesway mechanism.

Preliminary values of the peak axial loads in the columns and the peak shears in the girders may be computed by multiplying the equivalent vertical static load by the roof tributary area. Since the axial loads in the columns are due to the reaction from the roof girders, the equivalent static vertical load should be computed using the dynamic load factor for the beam mechanism.

5-41.5 Sizing of Frame Members.

Each member in a frame under the action of horizontal and vertical blast loads is subjected to combined bending moments and axial loads. However, the phasing between critical values of the axial force and bending moment cannot be established using a simplified analysis. Therefore, it is recommended that the peak axial loads and moments obtained from Figure 5-24 (+) be assumed to act concurrently for the purpose of trial beam-column design. The overall resistance of the frame depends upon the ultimate strength of the members acting as beam-columns.

When an exterior frame of a building is positioned such that the shock front is parallel to frame, the loadings on each end of the building are equal and sidesway action will only occur in the direction of the shock wave propagation. Frame action will also be in one direction, in the direction of the sidesway. If the blast wave impinges on a building from a quartering direction, then the columns and girders in the exterior frames are subjected to biaxial bending due to the simultaneous loads acting on the various faces of the structure. This action will also cause sidesway in both directions of the structure. The interior girders will usually be subjected to bending in one direction only. However, interior columns may be subjected to either uniaxial or biaxial bending, depending upon the column connections to the girder system. In such cases, the moments and forces can be calculated by analyzing the response of the frame in each direction and superimposing the respective moments and forces acting on the individual elements. This approach is generally conservative since it assumes that the peak values of the forces in one direction occur simultaneously throughout the three-dimensional structure.

Having estimated the maximum values of the forces and moments throughout the frame, the preliminary sizing of the members can be performed using the criteria previously presented for beams and columns.

5-41.6 Stiffness and Deflection.

The stiffness factor K for single-story rectangular frames subjected to uniform horizontal loading is defined in Table 5-14 (+). Considering an equivalent single degree-of-freedom system, the sidesway natural period of this frame is

$$T_N = 2\pi(m_e/KK_L)^{1/2} \qquad 5\text{-}50$$

where K_L is a load factor that modifies K, the frame stiffness, due to a uniform load, so that the product KK_L is the equivalent stiffness due to a unit load applied at the equivalent lumped mass m_e.

The load factor is given by

$$K_L = 0.55\ (1 - 0.25ß) \qquad 5\text{-}51$$

where $ß$ is the base fixity factor and is equal to zero and one for pinned base and fixed base frames, respectively.

The equivalent mass m_e to be used in calculating the period of a sidesway mode consists of the total roof mass plus one-third of the column and wall masses. Since all of these masses are considered to be concentrated at the roof level, the mass factor, K_M, is equal to one.

The limiting resistance R_u is given by

$$R_u = \alpha wH \qquad (5\text{-}52)$$

where w is equal to the equivalent static uniform load based on the dynamic load factor for a panel or combined sidesway mechanism.

The equivalent elastic deflection X_E corresponding to R_u is

$$X_E = R_u / K_E \qquad (5\text{-}53)$$

Knowing the sidesway resistance R_u and the sidesway natural period of vibration T_n, the ductility ratio (μ) for the sidesway deflection of the frame can be computed using the dynamic response charts (Chapter 3). The maximum deflection X_m is then calculated from

$$X_m = \mu X_E \qquad (5\text{-}54)$$

where

μ = *ductility ratio in sidesway*

5-42 TRIAL DESIGN OF SINGLE-STORY FRAMES WITH SUPPLEMENTARY BRACING.

5-42.1 General.

Frames with supplementary bracing can consist of (a) rigid frames in one direction and bracing in the other direction, (b) braced frames in two directions with rigid connections, and (c) braced frames in two directions with pinned connections. Most braced frames utilize pinned connections.

5-42.2 Collapse Mechanisms.

The possible collapse mechanisms of single-story frames with diagonal tension bracing (X-bracing) are presented in Table 5-15 (+) and Table 5-16 (+) for pinned-base frames with rigid and nonrigid girder-to-column connections, respectively. In these tables, the cross sectional area of the tension brace is denoted by A_b, the dynamic design stress for the bracing member is f_{ds}, and the number of braced bays is denoted by the parameter m. In each case, the ultimate capacity of the frame is expressed in terms of the equivalent static load and the member ultimate strength (either M_p or $A_b f_{ds}$). In developing these expressions in the tables, the same assumptions were made as for rigid frames, i.e., M_p for the roof girder is constant for all bays, the bay width L is constant, and the column moment capacity coefficient C is greater than 1.0.

For rigid frames with tension bracing, it is necessary to vary C, C_1, and A_b in order to achieve an economical design. When nonrigid girder to column connections are used, C and C_1 drop out of the resistance function for the sidesway mechanism and the area of the bracing can be calculated directly.

5-42.3 Bracing Ductility Ratio.

Tension brace members are not expected to remain elastic under the blast loading. Therefore, it is necessary to determine if this yielding will be excessive when the system is permitted to deflect to the limits of the design criteria previously given.

The ductility ratio associated with tension yielding of the bracing is defined as the maximum strain in the brace divided by its yield strain. Assuming small deflections and neglecting axial deformations in the girders and columns, the ductility ratio is given by

$$\mu = \delta (\cos^2 \gamma)\, E/Lf_{ds} \qquad 5\text{-}55$$

where

μ = *ductility ratio*
δ = *sidesway deflection, inches*
γ = *vertical angle between the bracing and a horizontal plane*
L = *bay width, inches*

From the deflection criteria, the sidesway deflection is limited to $H/25$. The ductility ratio can be expressed further as

$$\mu = (H/25L)(\cos^2 \gamma)(E/f_{ds}) \qquad 5\text{-}56$$

5-42.4 Dynamic Load Factor.

The dynamic load factors listed in Section 5-41.3 may also be used as a rational starting point for a preliminary design of a braced frame. In general, the sidesway stiffness of braced frames is greater than unbraced frames and the corresponding panel or sidesway dynamic load factor may also be greater. However, since these dynamic load factors are necessarily approximate and serve only as a starting point for a preliminary design, refinements to these factors for frames with supplementary diagonal braces are not warranted.

5-42.5 Loads in Frame Members.

Estimates of the peak axial loads in the girders and the peak shears in the columns of a braced rigid frame are obtained from Figure 5-25 (+). It should be noted that the shear in the blastward column and the axial load in the exterior girder are the same as the

rigid frame shown in Figure 5-24 (+). The shears in the interior columns *V2* are not affected by the braces while the axial loads in the interior girders P are reduced by the horizontal components of the force in the brace F_H. If a bay is not braced, then the value of F_H must be set equal to zero when calculating the axial load in the girder of the next braced bay. To avoid an error, horizontal equilibrium should be checked using the formula:

$$R_u = V1 + nV2 + mF_H \qquad 5\text{-}57$$

where

R_u, V1, V2 and F_H are defined in Figure 5-25 (+)
n = number of bays
m = number of braced bays

In addition, the value of M_p used in Figure 5-25 (+) is simply the design plastic moment obtained from the controlling panel or combined mechanism.

An estimate of the peak loads for braced frames with nonrigid girder to column connections may be obtained using Figure 5-25 (+). However, the value of M_p must be set equal to zero. For such cases, the entire horizontal load is taken by the exterior column and bracing. There is no shear force in the interior columns.

Preliminary values of the peak axial loads in the columns and the peak shears in the girders are obtained in the same manner as rigid frames. However, in computing the axial loads in the columns, the vertical components of the forces in the tension braces must be added to the vertical shear in the roof girders. The vertical component of the force in the brace is given by

$$F_v = A_b f_{ds} \sin \gamma \qquad 5\text{-}58$$

The reactions from the braces will also affect the load on the foundation of the frame; therefore, the design of the footings must include these loads.

5-42.6 Stiffness and Deflection.

The equations for determining the sidesway natural period of vibration and the deflection at yield for braced frames are similar to that of rigid frames. The primary difference is the inclusion of the horizontal stiffness (K_b) provided by tension bracing. The equations for the natural period and elastic deflection are as follows:

Natural period of vibration is

$$T_N = 2\pi [m_e /(KK_L + K_b)]^{1/2} \qquad 5\text{-}59$$

and the equivalent elastic deflection is

$$X_E = R_u /(KK_L + K_b) \qquad 5\text{-}60$$

The horizontal stiffness of the tension bracing is given by

$$K_b = (nA_bE \cos^3\gamma)/L \qquad 5\text{-}61$$

and other values have been defined previously. It may be noted that for braced frames with nonrigid girder-to-column connections, the value of the frame stiffness (*K*) is equal to zero.

5-42.7 Slenderness Requirements for Diagonal Braces.

The slenderness ratio of the bracing should be less than 300 to prevent vibration and "slapping." This design condition can be expressed as

$$r_b \geq L_b /300 \qquad 5\text{-}62$$

where

r_b = *minimum radius of gyration of the bracing member*
L_b = *length between points of support*

Even though a compression brace is not considered effective in providing resistance, the tension and compression braces should be connected where they cross. In this manner, L_b for each brace may be taken equal to half of its total length.

5-42.8 Sizing of Frame Members.

Estimating the maximum forces and moments in frames with supplementary bracing is similar to the procedures described for rigid frames. However, the procedure is slightly more involved since it is necessary to assume a value for the brace area in addition to the assumptions for the coefficients *C* and C_1. For frames with nonrigid connections, *C* and C_1 do not appear in the resistance formula for a sidesway mechanism and A_b can be determined directly. In selecting a trial value of A_b for frames with rigid connections, the minimum brace size is controlled by slenderness requirements. In addition, in each particular application, there will be a limiting value of A_b beyond which there will be no substantial weight savings in the frame members since there are maximum slenderness requirements for the frame members. In general, values of A_b of about 2 square inches will result in a substantial increase in the overall resistance for frames with rigid connections. Hence, an assumed brace area in this range is recommended as a starting

point. The design of the beams and columns of the frames follow the procedures previously presented.

Figure 5-23 Orientation of Roof Purlins with Respect to Blast Load Direction for Frame Blast Loading

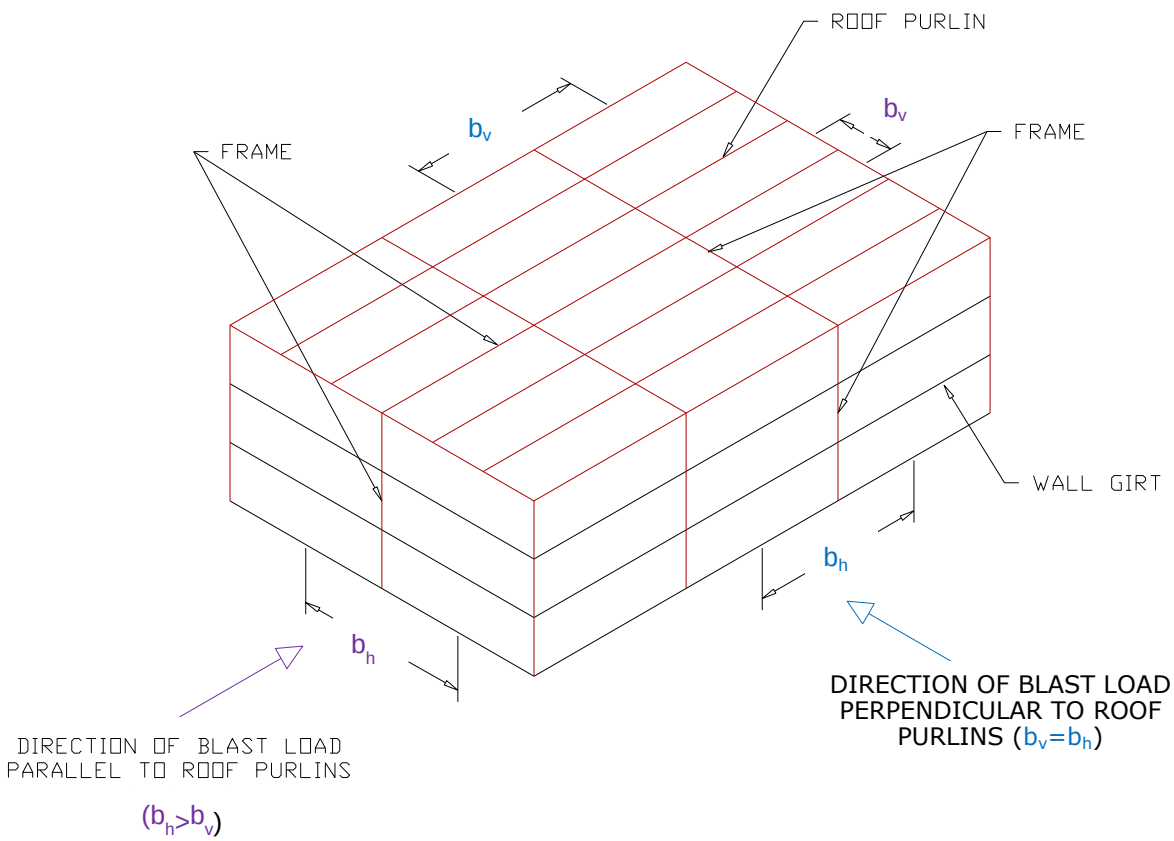

Figure 5-24 Estimate of Peak Shears and Axial Loads in Rigid Frames Due to Horizontal Loads

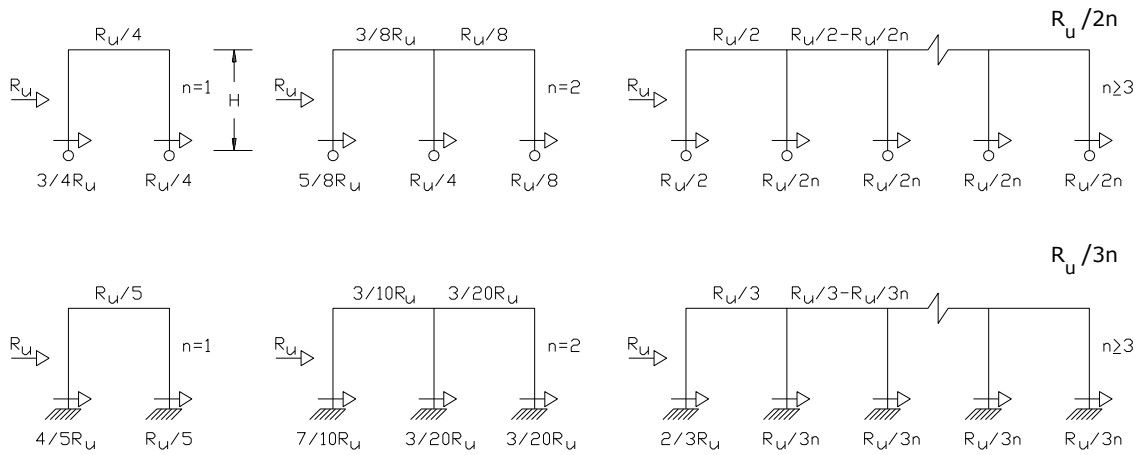

n = NUMBER OF BAYS

R_u = αwH = EQUIVALENT HORIZONTAL STATIC LOAD

Figure 5-25 Estimates of Peak Shears and Axial Loads in Braced Frames Due to Horizontal Loads

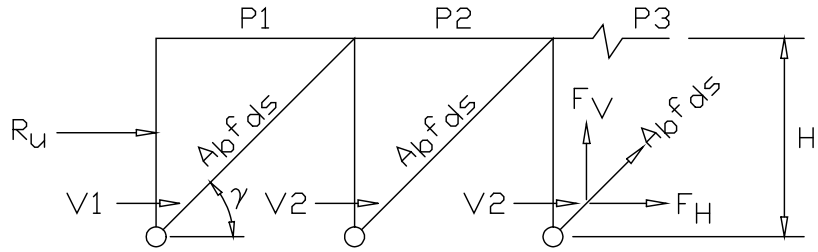

$$R_u = \alpha w H$$
$$V1 = R_u/2 + M_p/H$$
$$P1 = R_u/2 - M_p/H$$
$$P2 = P1 - V2 - F_H$$
$$F_H = A_b f_{ds} \cos\gamma$$
$$F_V = A_b f_{ds} \sin\gamma$$
$$V2 = R_u/2n - M_p/nH$$
$$P3 = P2 - V2 - F_H$$
$$Pn = P(n-1) - V2 - F_H$$

Table 5-13 Collapse Mechanisms for Rigid Frames with Fixed and Pinned Bases

COLLAPSE MECHANISM	PLASTIC MOMENT MP	
	PINNED BASES	FIXED BASES
1. BEAM MECHANISM 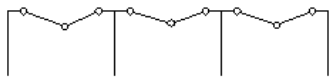	$\frac{wL^2}{16}$	$\frac{wL^2}{16}$
2. BEAM MECHANISM	$\frac{\alpha wH^2}{4(2C+1)}$	$\frac{\alpha wH^2}{4(3C+1)}$
3a. PANEL MECHANISM 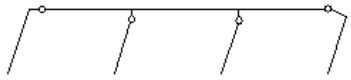	$\frac{\alpha wH^2}{2} \times \frac{1}{2+(n-1)C_1} \quad (C_1 \leqslant 2)^*$	$\frac{\alpha wH^2}{4} \times \frac{1}{1+(n-1)C_1+C} \quad (C_1 \leqslant 2)^*$
3b. PANEL MECHANISM 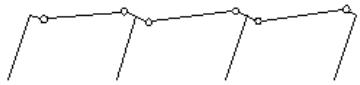	$\frac{\alpha wH^2}{4n} \quad (C_1 \geqslant 2)^*$	$\frac{\alpha wH^2}{2} \times \frac{1}{2(n+C)+(n-1)C_1} \quad (C_1 \geqslant 2)^*$
4. COMBINED MECHANISM 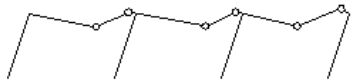	$\frac{w}{8n}\left(\alpha H^2 + \frac{n}{2}L^2\right)$	$\frac{w}{2} \times \frac{\alpha H^2 + \frac{n}{2}L^2}{2(2n+C)+(n-1)C_1}$
5a. COMBINED MECHANISM 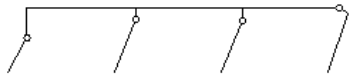	$\frac{\frac{3}{8}\alpha wH^2}{C+\frac{1}{2}+\frac{C_1}{2}(n-1)} \quad (C_1 \leqslant 2)^*$	$\frac{\frac{3}{8}\alpha wH^2}{\frac{5}{2}C+(n-1)C_1+\frac{1}{2}} \quad (C_1 \leqslant 2)^*$
5b. COMBINED MECHANISM 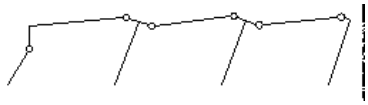	$\frac{\frac{3}{8}\alpha wH^2}{C+\left(n-\frac{1}{2}\right)} \quad (C_1 \geqslant 2)^*$	$\frac{\frac{3}{8}\alpha wH^2}{\frac{5}{2}C+(n-1)\frac{C_1}{2}+\left(n-\frac{1}{2}\right)} \quad (C_1 \geqslant 2)^*$
6. COMBINED MECHANISM 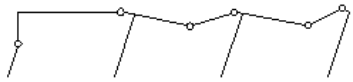	$\frac{\frac{w}{8}\left[3\alpha H^2+(n-1)L^2\right]}{C+\left(2n-\frac{3}{2}\right)}$	$\frac{\frac{w}{8}\left[3\alpha H^2+(n-1)L^2\right]}{\frac{5}{2}C+(n-1)\frac{C_1}{2}+\left(2n-\frac{3}{2}\right)}$
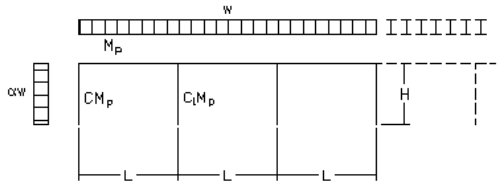	n = number of bays = 1,2,3,… w = uniform equivalent static load	

* For C_1 = 2 hinges form in the girders and columns at interior joints

Table 5-14 Stiffness Factors for Single Story, Multi-Bay Rigid Frames Subjected to Uniform Horizontal Loading

STIFFNESS FACTOR K = $\frac{EI_{ca}}{H^3} \times C_2 \times [1 + (0.7 - 0.1\beta)(n-1)]$

n = NUMBER OF BAYS

β = BASE FIXITY FACTOR **

$D = \frac{I_g / L}{I_{ca}(0.75 + 0.25\beta)/H}$

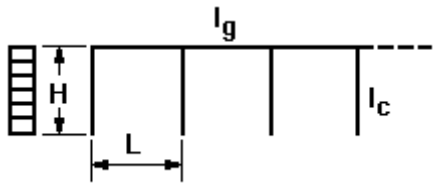

I_{ca} = *AVERAGE COLUMN MOMENT OF INERTIA* $= \sum I_c / (n+1)$

D	C_2		
	β = 1.0	β = 0.5*	β = 0
0.25	26.7	14.9	3.06
0.50	32.0	17.8	4.65
1.00	37.3	20.6	6.04

* Values of C_2 are approximate for this β

** β = 1.0 for fixed base

= 0.0 for hinged base

where:

E = modulus of elasticity (psi)
I_{ca}, I_g, I_c = moment of inertia (in.4)
H = height (feet)
L = bay length (feet)

Table 5-15 Collapse Mechanisms for Rigid Frames with Supplementary Bracing and Pinned Bases

COLLAPSE MECHANISM	PLASTIC MOMENT M_P
1. BEAM MECHANISM 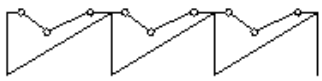	$\frac{wL^2}{16}$
2. BEAM MECHANISM 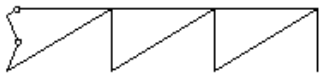	$\frac{\alpha wH^2}{4(2C+1)}$
3a. PANEL MECHANISM 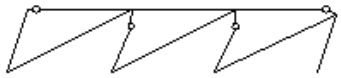	$\left(\frac{\alpha wH^2}{2} - mA_b f_{ds} H\cos\gamma\right)\frac{1}{2+(n-1)C_1} \quad (C_1 \leqq 2)^*$
3b. PANEL MECHANISM 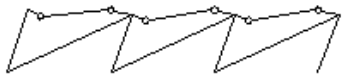	$\frac{\alpha wH^2}{4n} - \frac{mA_b f_{ds} H\cos\gamma}{2n} \quad (C_1 \geqq 2)^*$
4. COMBINED MECHANISM 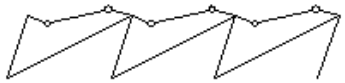	$\frac{w}{8n}\left(\alpha H^2 + \frac{n}{2}L^2\right) - \frac{mA_b f_{ds} H\cos\gamma}{4n}$
5a. COMBINED MECHANISM 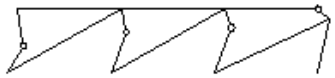	$\frac{\frac{3}{8}\alpha wH^2 - \frac{m}{2}A_b f_{ds} H\cos\gamma}{C + \frac{1}{2} + \frac{C_1}{2}(n-1)} \quad (C_1 \leqq 2)^*$
5b. COMBINED MECHANISM 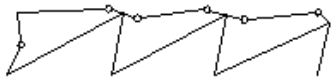	$\frac{\frac{3}{8}\alpha wH^2 - \frac{m}{2}A_b f_{ds} H\cos\gamma}{C + \left(n - \frac{1}{2}\right)} \quad (C_1 \geqq 2)^*$
6. COMBINED MECHANISM 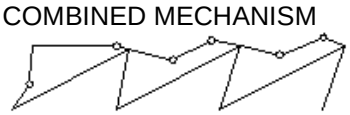	$\frac{\frac{w}{8}[3\alpha H + (n-1)L] - \frac{m}{2}A_b f_{ds} H\cos\gamma}{C + \left(2n - \frac{3}{2}\right)}$
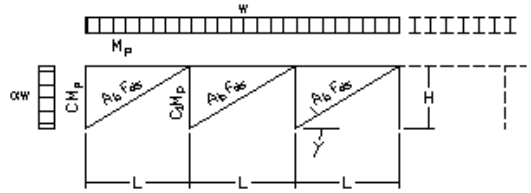	m = number of braced bays n = number of bays = 1,2,3,… w = uniform equivalent static load

* For C_1 = 2 hinges form in the girders and columns at interior joints

Table 5-16 Collapse Mechanisms for Frames with Supplementary Bracing, Nonrigid Girder-to-Column Connections and Pinned Bases.

COLLAPSE MECHANISM	ULTIMATE CAPACITY	FRAMING TYPE
1. BEAM MECHANISM EXTERIOR GIRDER 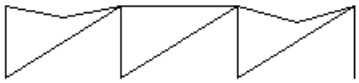	$M_p = wL^2/8$ $M_p = wL^2/12$ $M_p = wL^2/16$	① ② ③
2. BEAM MECHANISM INTERIOR GIRDER 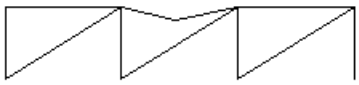	$M_p = wL^2/8$ $M_p = wL^2/16$	① ② & ③
3. BEAM MECHANISM BLASTWARD COLUMN 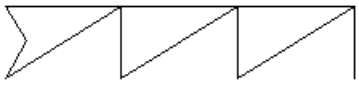	$M_p = \alpha wH^2/8$ $M_p = \dfrac{\alpha wH^2}{4(2C+1)}$	① & ② ③
4. PANEL MECHANISM 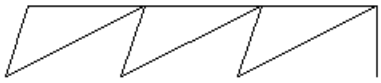	$A_b f_{ds} = \alpha wH / 2m\cos\gamma$ $A_b f_{ds} = \dfrac{\alpha wH}{2m\cos\gamma} - \dfrac{2M_p}{mH\cos\gamma}$	① & ② ③
5. COMBINED MECHANISM 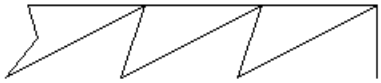	$A_b f_{ds} = \dfrac{3\alpha wH}{4m\cos\gamma} - \dfrac{(2C+1)M_p}{mH\cos\gamma}$	③

Girder Framing Type:

① Girder simply supported between columns

② Girder continuous over columns

③ Girder continuous over columns and rigidly connected to exterior columns only

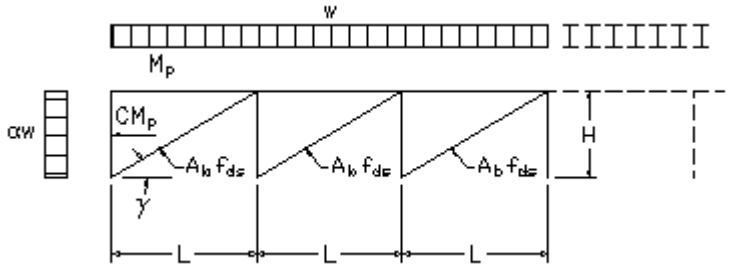

m = number of braced bays

w = uniform equivalent static load

CONNECTIONS

5-43 GENERAL.

The connections in a steel structure designed in accordance with plastic design concepts must fulfill their function up to the ultimate load capacity of the structure. In order to allow the members to reach their full plastic moments, the connections must be capable of transferring moments, shears and axial loads with sufficient strength, proper stiffness and adequate rotation capacity.

Connections must be designed with consideration of economical fabrication and ease of erection. Connecting devices may be rivets, bolts, welds, screws or various combinations thereof.

5-44 TYPES OF CONNECTIONS.

The various connection types generally encountered in steel structures can be classified as primary member connections, secondary member connections and panel attachments. Primary member connections are corner frame, beam-to-column, beam-to-girder and column base connections as well as splices. Secondary member connections are purlin-to-frame, girt-to-frame and bracing connections. Panel attachments are roof-to-floor panel and wall siding connections.

Primary member connections refer to those used in design and construction of the framing of primary members. They generally involve the attachment of hot-rolled sections to one another, either to create specific support conditions or to achieve continuity of a member or the structure. In that respect, connections used in framing may be classified into three groups, namely, rigid, flexible (nonrigid) and semirigid, depending upon their degree of restraint which is the ratio of the actual end moment that may be developed to the end moment in a fully fixed-ended beam. Approximately, the degree of restraint is generally considered as over 90 percent for rigid connections, between 20 to 90 percent for semirigid connections and below 20 percent for flexible connections.

It should be mentioned that the strength and rotation characteristics of semirigid connections are dependent upon the properties of the intermediate connection elements (angles, plates, tees) and thus, are subject to much variation. Since semirigid structural analyses are seldom undertaken due to their great complexity, no further details on semirigid connections will be given here.

Secondary member connections are used to fasten members such as purlins, girts or bracing members to the primary members of a frame, either directly or by means of auxiliary sections such as angles and tees.

Basic requirements for primary and secondary member connections, as well as general guidelines for proper design, are presented in Sections 5-45 and 5-46. In addition,

dynamic design stresses to be used in the selection and sizing of fastening devices are given in Section 5-47.

Panel attachments are used to attach elements of the skin or outer shell of an installation as well as floor and wall panels to the supporting skeleton. Connections of this type are distinguished by the fact that they fasten relatively thin sheet material to one another or to heavier rolled sections. Roof decks and wall siding have to withstand during their lifetime (apart from accidental blast loads) exposure to weather, uplift forces, buffeting and vibration due to winds, etc. For this reason, and because of their widespread use, special care should be taken in design to ensure their adequate behavior. Some basic requirements for panel connections are presented in Section 5-48.

5-45 REQUIREMENTS FOR MAIN FRAMING CONNECTIONS.

The design requirements for frame connections may be illustrated by considering the behavior of a typical corner connection as shown in Figure 5-26 (+). Two members are joined together without stiffening of the web at the connection. Assuming that the web thickness is insufficient, the behavior of the connection is represented by Curve 1,which shows that yielding due to shear force starts at a relatively low load. Even though the connection rotates past the required hinge rotation, the plastic moment M_p is not reached. In addition, the elastic deformations are also larger than those assumed by the theoretical design curve.

A second and different connection may behave as indicated by Curve 2. Although the elastic stiffness is satisfactory and the maximum capacity exceeds M_p, the connection failed before reaching the required hinge rotation and thus, is unsatisfactory.

These considerations indicate that connections must be designed for strength, stiffness and rotation capacity. They must transmit the required moment, shear and axial load, and develop the plastic moment M_p of the members.

Normally, an examination of a connection to see if it meets the requirements of stiffness will not be necessary. Compared to the total length of the member, the length of the connection is small, and, if the connection is slightly more flexible than the member which it joins, the general effect on the structural behavior is not great. Approximately, the average unit rotation of the connecting zone should not exceed that of an equivalent length of the members being joined.

Of equal importance with the strength of the connection is an adequate reserve of ductility after the plastic moment has been attained. Rotation capacity at plastic hinge locations is essential to the development of the full ultimate load capacity of the structure.

5-46 DESIGN OF CONNECTIONS.

It is not the intent of this section to present procedures and equations for the design of the various types of connections likely to be encountered in the blast-resistant design of

a steel structure. Instead, the considerations necessary for a proper design will be outlined.

After completion of the dynamic analysis of the structure, the members are sized for the given loadings. The moments, shears, and axial loads at the connections are known. Full recognition must be given to the consideration of rebound or stress reversal in designing the connections. Additionally, in continuous structures, the maximum values of P, M, and V may not occur simultaneously and thus, several combinations may have to be considered. With rigid connections such as a continuous column-girder intersection, the web area within the boundaries of the connection should meet the shear stress requirements of Section 5-23. If the web area is unsatisfactory, diagonal stiffeners or web doubler plates should be provided.

Stiffeners will normally be required to prevent web crippling and preserve flange continuity wherever flange-to-flange connections occur at columns in a continuous frame. Web crippling must also be checked at points of load application such as beam-girder intersections. In these cases, the requirements of Section 5-25 of this chapter and applicable sections of the AISC Specification must be considered.

Since bolted joints will develop yield stresses only after slippage of the members has occurred, the use of friction-type bolted connections is not recommended.

5-47 DYNAMIC DESIGN STRESSES FOR CONNECTIONS.

Bolts, rivets and welds shall be proportioned to resist the maximum forces using stresses equal to 1.7 times the allowable design stresses given in the Specification. Additionally, these stresses are increased by the dynamic increase factor specified in Section 5-12.2; hence,

$$f_d = 1.7(DIF)f_s \qquad 5\text{-}63$$

where

f_d = *the maximum dynamic design stress for connections*
DIF = *the dynamic increase factor (Figure 5-2 (+) or Table 5-2 (+))*
f_s = *the allowable equivalent static design stress of the bolt, rivet, or weld*

Rather than compiling new tables for maximum dynamic loads for the various types of connections, the designer will find it advantageous to divide the forces being considered by the factor 1.7(DIF) and then to refer to the allowable load tables in the AISC Specification.

5-48 REQUIREMENTS FOR FLOOR AND WALL PANEL CONNECTIONS.

Panel connections, in general, can be considered either panel-to-panel connections, or panel-to-supporting-frame connections. The former type involves the attachment of relatively light-gage materials to each other such that they act together as an integral unit. The latter type is generally used to attach sheet panels to heavier cross sections.

The most common type of fastener for decking and steel wall panels is the self-tapping screw with or without washer. Even for conventional design and regular wind loading, the screw fasteners have often been the source of local failure by tearing the sheeting material. It is evident that under blast loading and particularly on rebound, screw connectors will be even more vulnerable to this type of failure. Special care should be taken in design to reduce the probability of failure by using oversized washers and/or increased material thickness at the connection itself.

Due to the magnitude of forces involved, special types of connectors, as shown in Figure 5-27 (+), will usually be necessary. These may consist of self-drilling, self-tapping screws of larger diameters with oversized washers, puddle welds or washer plug welds, threaded connectors fired into the elements to be attached, or threaded studs, welded to the supporting members, which fasten the panel by means of a special arrangement of bushing and nut.

Apart from functioning as cladding and resisting out-of-plane loads , floor, roof and wall, steel panels can, when adequately connected, develop substantial resistance to in-plane forces, and act as diaphragms to significantly increase the overall lateral stiffness and stability of the structure. As a result, decking connections are, in many cases, subjected to a combination of shearing forces and pull-out forces. Also, after the panel has deflected under blast loading, the catenary action sustained by the flat sheet of the decking provides an important reserve capacity against total collapse. To allow for such catenary action, connectors and especially end connectors should be made strong enough to withstand the membrane forces that develop.

Figure 5-26 Corner Connection Behavior

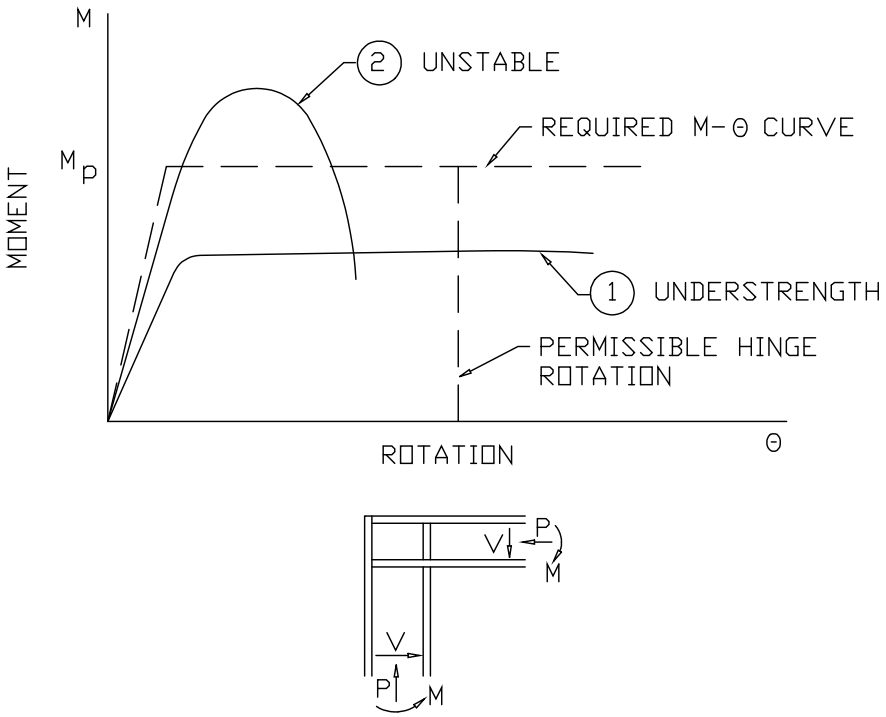

Figure 5-27 Typical Connections for Cold-Formed Steel Panels

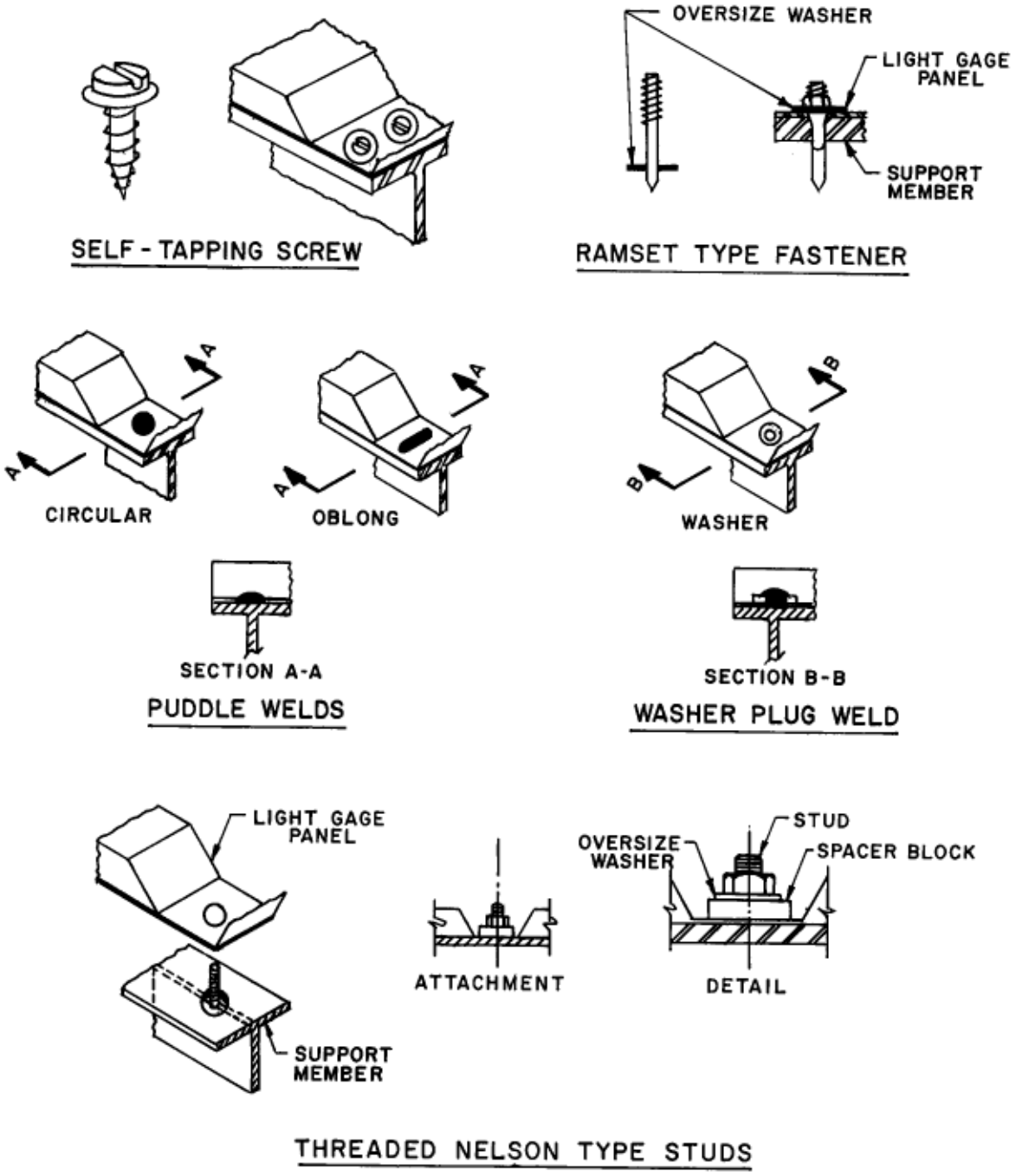

FRAGMENT PENETRATION

5-49 PENETRATION OF FRAGMENTS INTO STEEL.

5-49.1 Failure Mechanisms.

In deriving a prediction equation for the penetration and perforation of steel plates, it is important to recognize the failure mechanisms. The failure mode of primary concern in mild to medium hard homogeneous steel plates subjected to normal impact is ductile failure. In this mode, as the missile penetrates the plate, plastically deformed material is pushed aside and petals or lips are formed on both the front and back faces with no material being ejected from the plate. For plates with Brinell hardness values above 300, failure by "plugging" is a strong possibility. In this brittle mode of failure, a plug of material is formed ahead of the penetrating missile and is ejected from the back side of the plate. A third mode of failure is disking or flaking, in which circular disks or irregular flakes are thrown from the back face. This type of failure is mainly a concern with plates of inferior quality steel and should not, therefore, be a common problem in the design of protective structures.

5-49.2 Primary Fragment Penetration Equations.

In protective design involving primary fragments, a penetration equation is required which yields reliable estimates corresponding to the standard primary fragment illustrated in Figure 4-77 (+) of Chapter 4. These design equations consider only normal penetration which is critical for the design of protective structures. These equations apply to penetration into mild steel and are conservative for plates with a Brinell hardness value above 150. Steel penetration equations in design for primary fragment impact are expressed in the following forms:

For AP steel fragments penetrating mild steel plates,

$$x = 0.30\, W_f^{0.33}\, V_s^{1.22} \qquad 5\text{-}64$$

and for mild steel fragments penetrating mild steel plates,

$$x = 0.21\, W_f^{0.33}\, V_s^{1.22} \qquad 5\text{-}65$$

where

x = *depth of penetration (in)*
W_f = *fragment weight (oz)*
V_s = *striking velocity of fragment (kfps)*

Charts for steel penetration by primary fragments according to these equations are presented in Figure 5-28 (+) and Figure 5-29 (+).

To estimate the penetration of metal fragments other than armor piercing, the procedures outlined in Section 4-60.3 of Chapter 4 are entirely applicable to steel plates.

5-49.3 Residual Velocity After Perforation of Steel Plate.

The penetration equations presented in Section 5-49.2 may be used for predicting the occurrence of perforation of metallic barriers and for calculating the residual fragment velocity after perforation.

For normal impact of a steel fragment, with the shape illustrated in Figure 4-77 (+) of Chapter 4, the equation for residual velocity is

$$V_r / V_s = [1 - (V_x / V_s)^2]^{1/2} / (1 + t/d) \qquad 5\text{-}66$$

where

V_r = *residual velocity*
V_s = *striking velocity*
V_x = *critical perforation velocity for the fragment of impacting the plate of thickness t (see explanation below)*
d = *diameter of cylindrical portion of fragment (in), as illustrated in Figure 4-77 (+) of Chapter 4*

The value of V_x is determined from Figure 5-28 (+) or Figure 5-29 (+) by substituting the plate thickness *t* for the penetration depth *x* and reading the corresponding value of striking velocity, V_s. This striking velocity becomes the critical perforation velocity, V_x. A plot of the residual velocity equation for a range of *t/d* ratios is presented in Figure 5-30 (+).

Multiple plate penetration problems may be analyzed by the successive application of Equation 5-64 or 5-65 for predicting the depth of penetration and Equation 5-66 for calculating the residual velocity up on perforation of the plate. In addition, composite construction, consisting of concrete walls with attached spall plates, can be analyzed for fragment impact by tracing the motion of the fragment through each successive layer. The striking velocity of the fragment upon each intermediate layer is the residual fragment velocity after perforation of the previous layer. The conservative assumptions are made that the fragment remains intact during the penetration and that it does not deviate from a straight line path as it crosses the interface between the different media.

Figure 5-28 Steel Penetration Design Chart – AP Steel Fragments Penetrating Mild Steel Plates

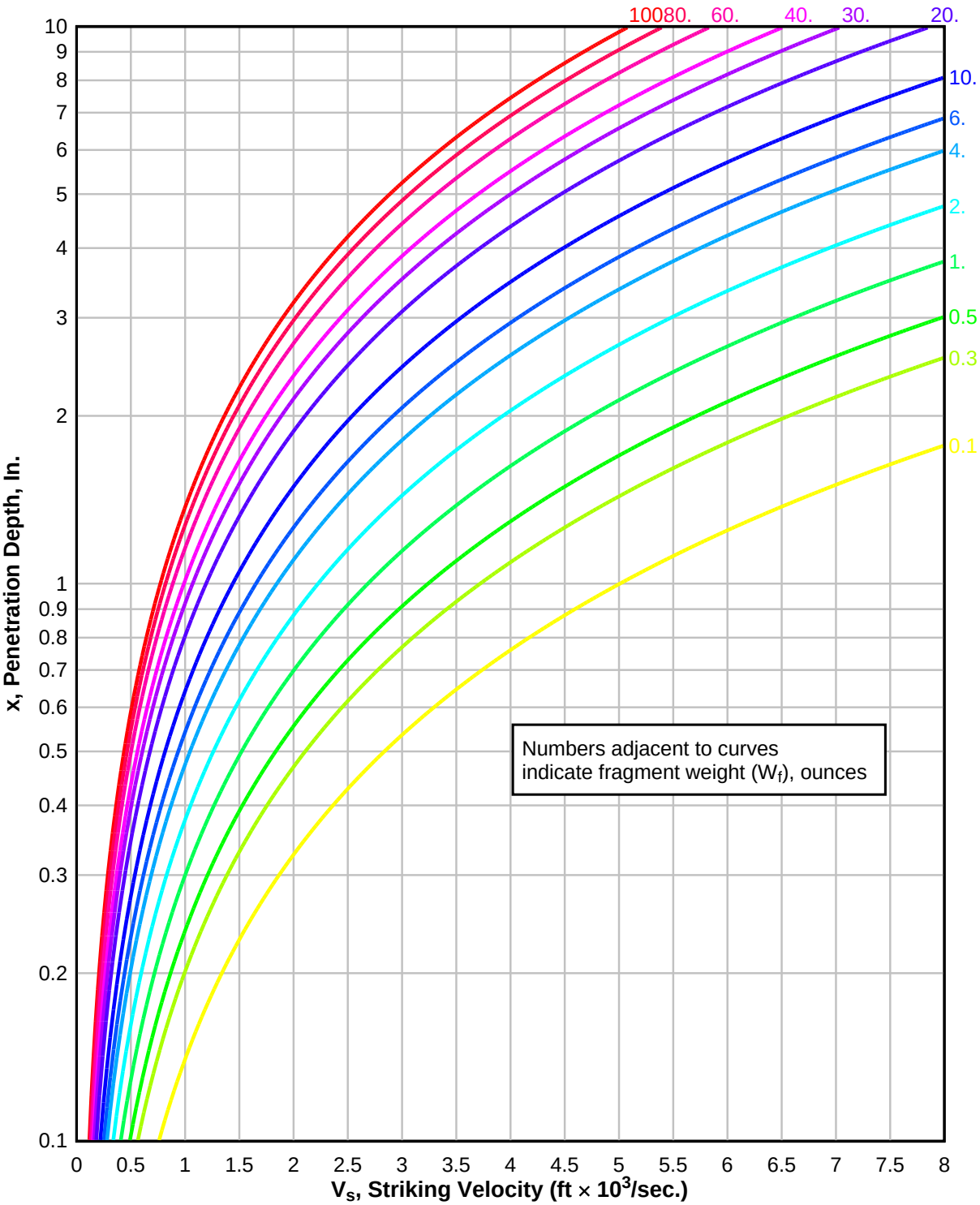

Figure 5-29 Steel Penetration Design Chart – Mild Steel Fragments Penetrating Mild Steel Plates

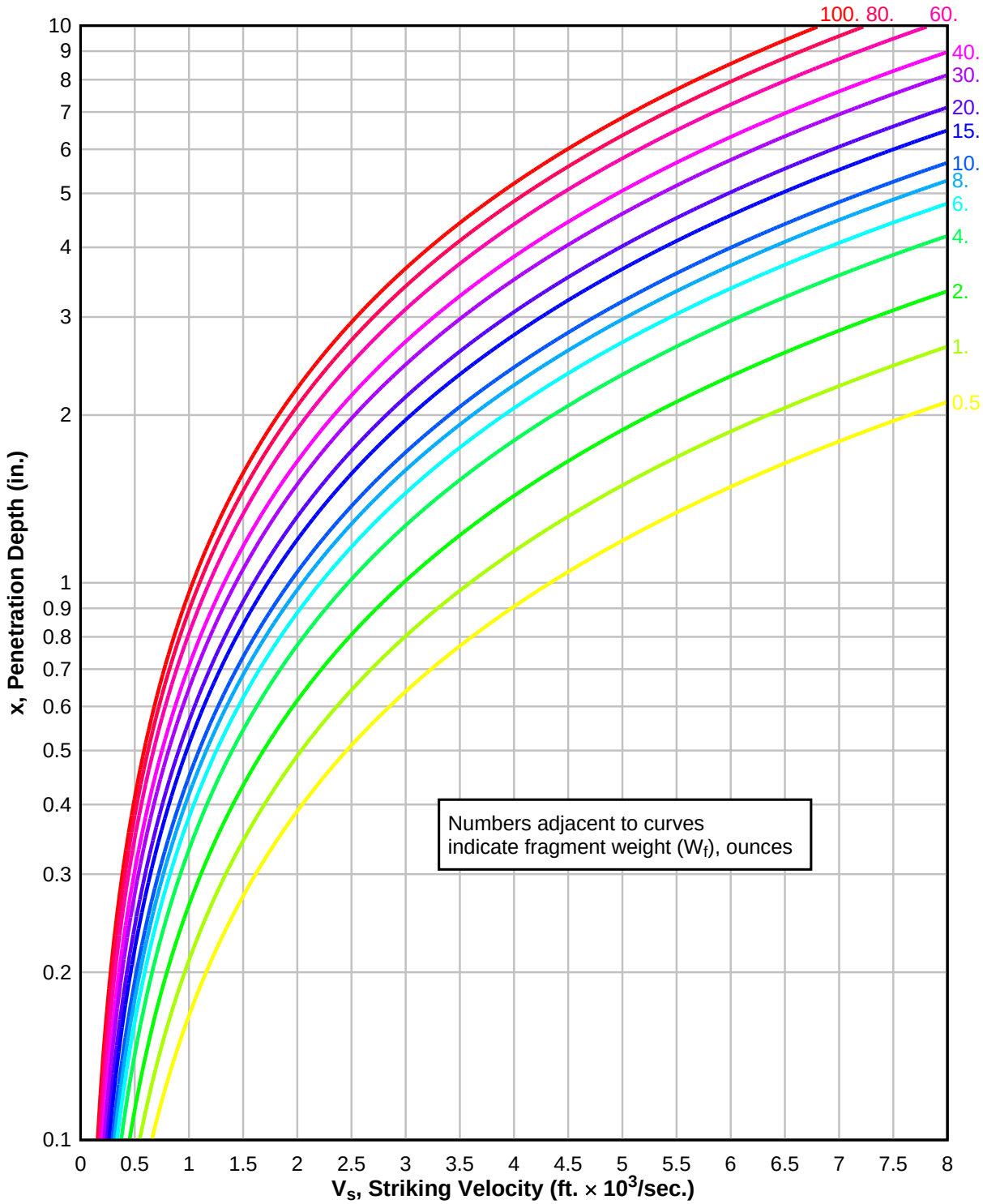

Figure 5-30 Residual Fragment Velocity Upon Perforation of Steel Barriers

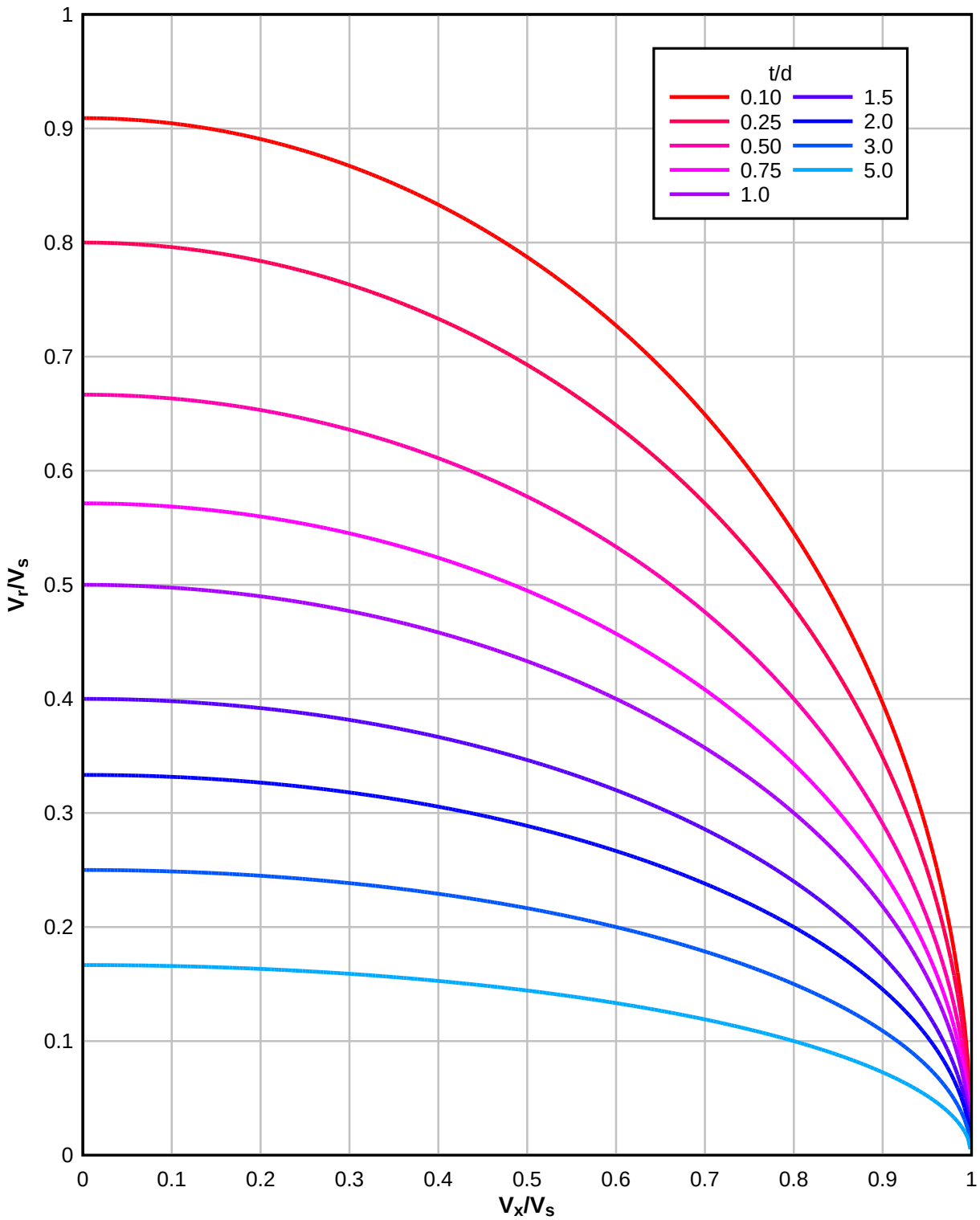

TYPICAL DETAILS FOR BLAST-RESISTANT STEEL STRUCTURES

5-50 GENERAL.

This section presents several examples of typical framing connections, structural details and blast doors used in industrial installations designed to resist accidental blast loadings. This section is intended to augment those details presented in prior sections of this chapter.

5-51 STEEL FRAMED BUILDINGS.

Such buildings are often rectangular in plan, two or three bays wide and four or more bays long. Figure 5-31 (+) shows an example of a typical framing plan for a single-story building designed to resist a pressure-time blast loading impinging on the structure at an angle with respect to its main axes. The structural system consists of an orthogonal network of rigid frames. The girders of the frames running parallel to the building length serve also as purlins and are placed, for ease of erection, on top of the frames spanning across the structure's width.

Figure 5-32 (+) to Figure 5-35 (+) present typical framing details related to the general layout of Figure 5-31 (+). As a rule, the columns are fabricated without splices, the plate covers and connection plates are shop welded to the columns, and all girder to column connections are field bolted. A channel is welded on top of the frame girders to cover the bolted connections and prevent (avoid) interference with the roof decking. All of the framing connections are designed to minimize stress concentrations and to avoid triaxial strains. They combine ductility with ease of fabrication.

5-52 COLD-FORMED, LIGHT GAGE STEEL PANELS.

Figure 5-36 (+) shows typical cross sections of cold-formed, light gage steel panels commonly used in industrial installations. The closed sections, which are composed of a corrugated hat section and a flat sheet, are used to resist blast pressures in the low pressure range, whereas the open hat section is recommended only for very low pressure situations as siding or roofing material. A typical vertical section illustrates the attachment of the steel paneling to the supporting members. Of particular interest is the detail at the corner between the exterior wall and the roof, which is designed to prevent peeling of the decking that may be caused by negative pressures at the roof edge.

Figure 5-37 (+) gives some typical arrangements of welded connections for attaching cold-formed steel panels to their supporting elements. Type A refers to an intermediate support whereas Type B refers to an end support. It is recommended that the diameter of puddle welds be 3/4 of an inch minimum and should not exceed 1-1/2 inches because of space limitations in the panel valleys. For deeper panels, it is often necessary to provide two rows of puddle welds at the intermediate supports in order to resist the uplift forces in rebound. It should be noted that welds close to the hooked edge of the panel are recommended to prevent lifting of adjacent panels.

Figure 5-38 (+) shows an arrangement of bolted connections for the attachment of cold-formed steel panels to the structural framing. The bolted connection consists of: a threaded stud resistance welded to the supporting member, a square steel block with a concentric hold used as a spacer, and a washer and nut for fastening. Figure 5-39 (+) presents a cross section of that connection with all the relevant details along with information pertaining to puddle welds.

5-53 BLAST DOORS.

Figure 5-40 (+) and Figure 5-41 (+) show details of single-leaf and double-leaf blast doors, respectively. Figure 5-40 (+) presents a single-leaf door installed in a steel structure. The design is typical of doors intended to resist relatively low pressure levels. It is interesting to note that the door is furnished with its tubing frame to ensure proper fabrication and to provide adequate stiffness during erection. In Figure 5-41 (+), the double-leaf door with its frame is installed in place and attached to the concrete structure. In both figures details of hinges, latches, anchors, and panic hardware are illustrated. It should be noted that the pins at the panic latch ends are made of aluminum in order to eliminate the danger of sparking, a hazard in ammunition facilities which might arise from steel-on-steel striking.

Figure 5-42 (+) shows details of compression arch and tension arch doors. The tension arch door requires compression ties to develop the compression reactions for the arch and to prevent the door from being blown through the opening. The compression arch door requires a tension tie plate to develop the reactions and to prevent large distortions in the door that may bind it in place.

Figure 5-31 Typical Framing Plan For a Single-Story Blast-Resistant Steel Structure

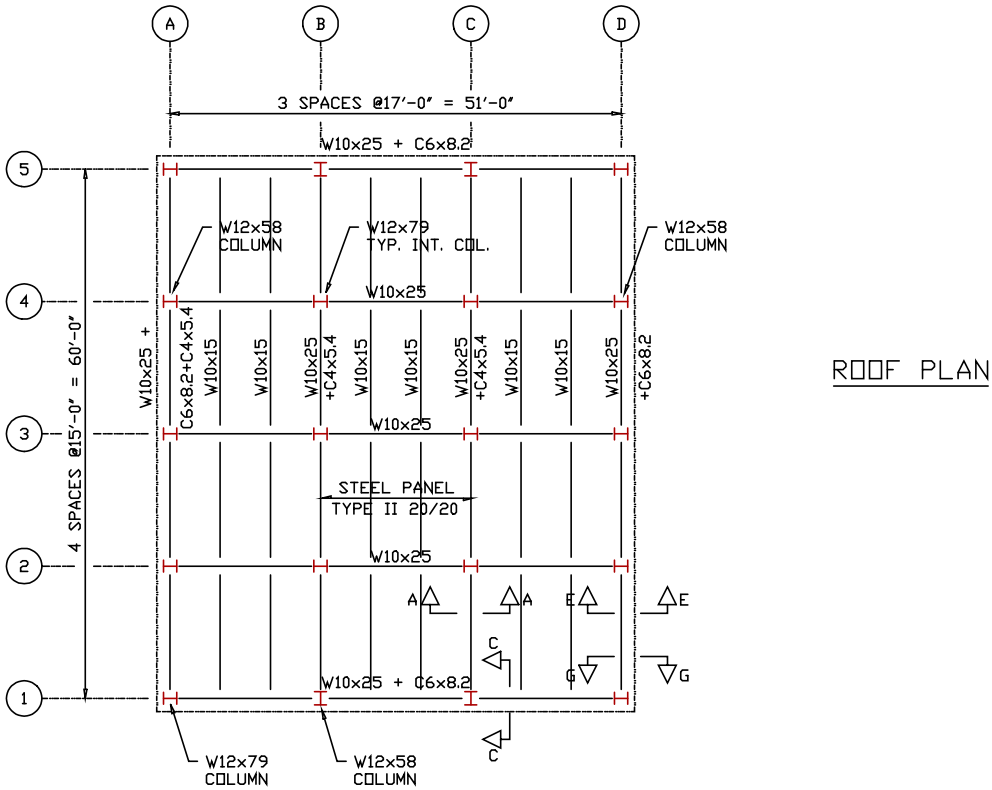

Figure 5-32 Typical Framing Detail at Interior Column 2-C

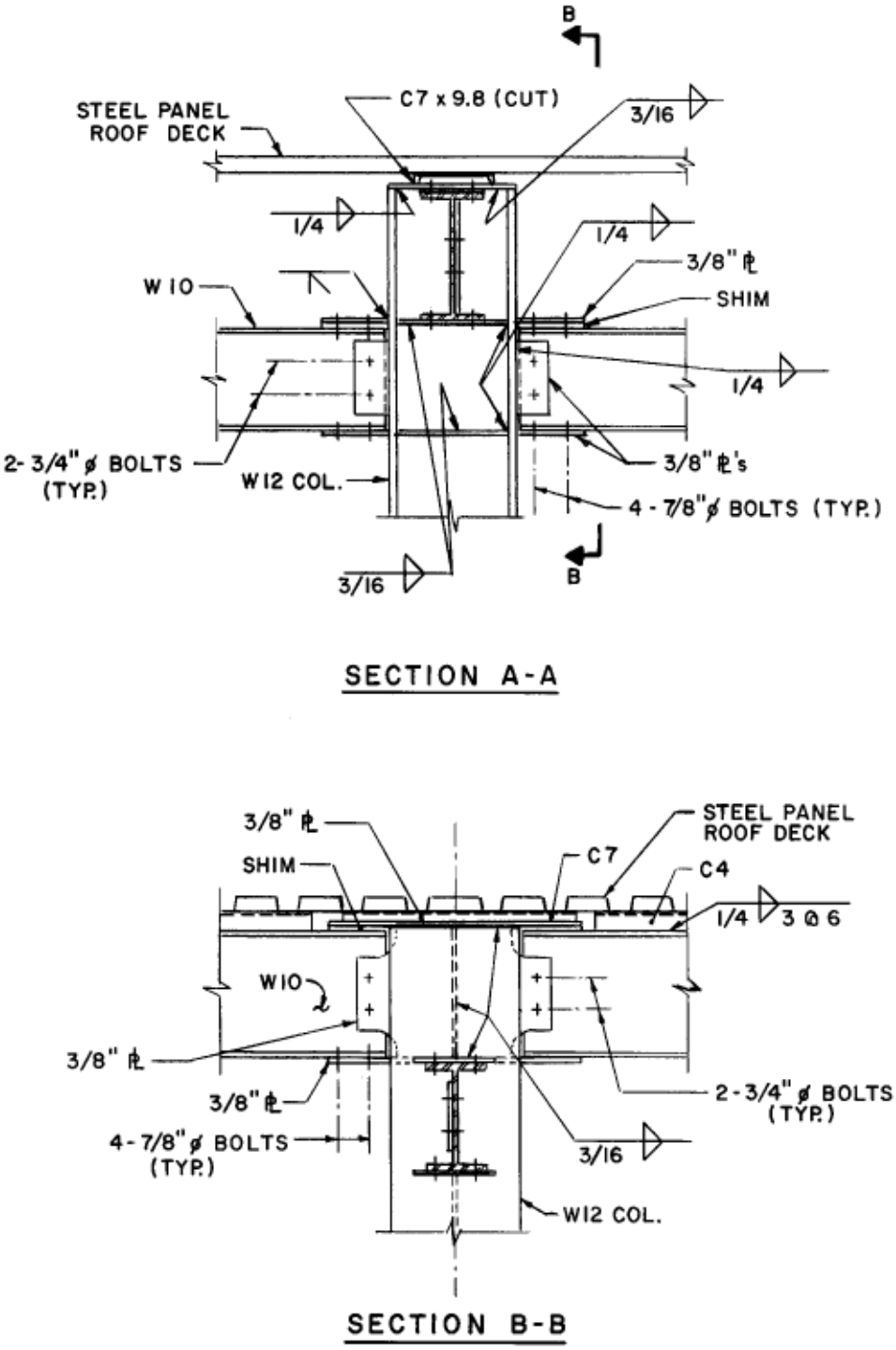

Figure 5-33 Typical Framing Detail at End Column 1-C

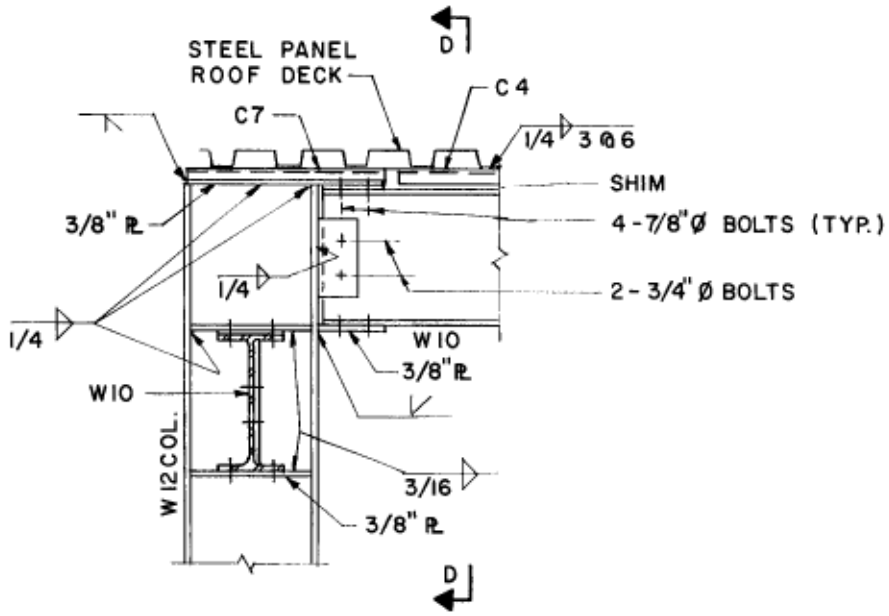

SECTION C-C

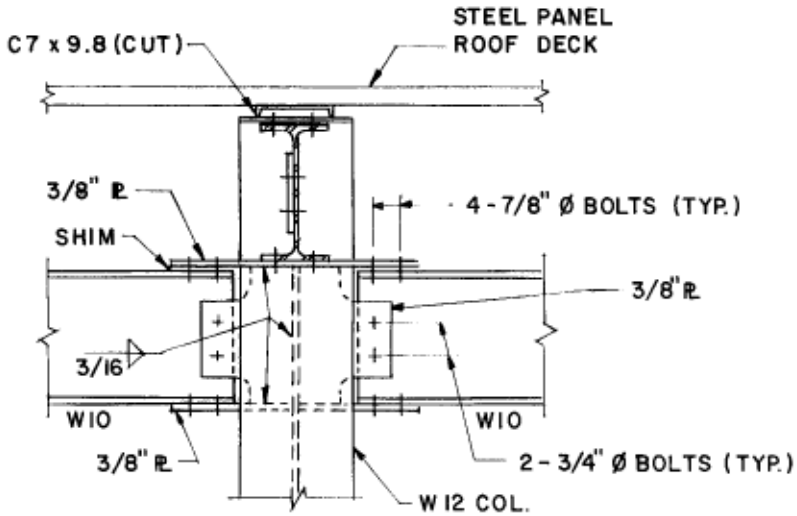

SECTION D-D

Figure 5-34 Typical Framing Detail at Side Column 2-D

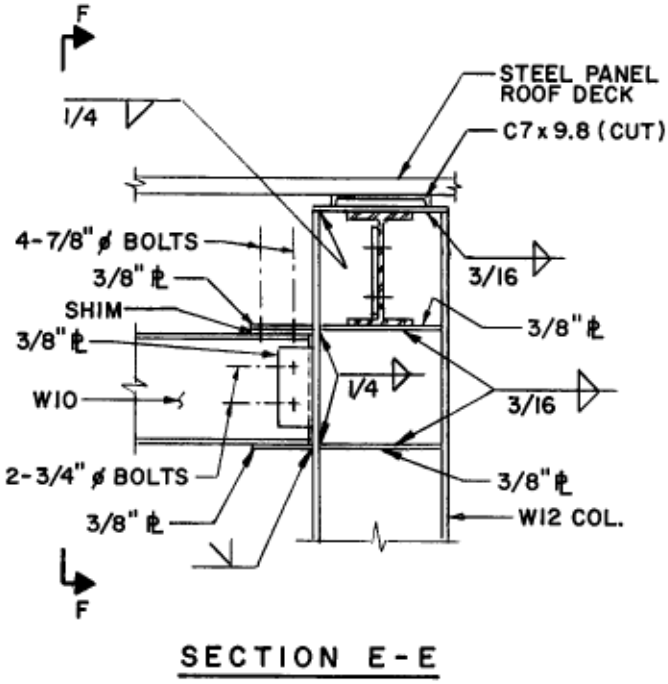

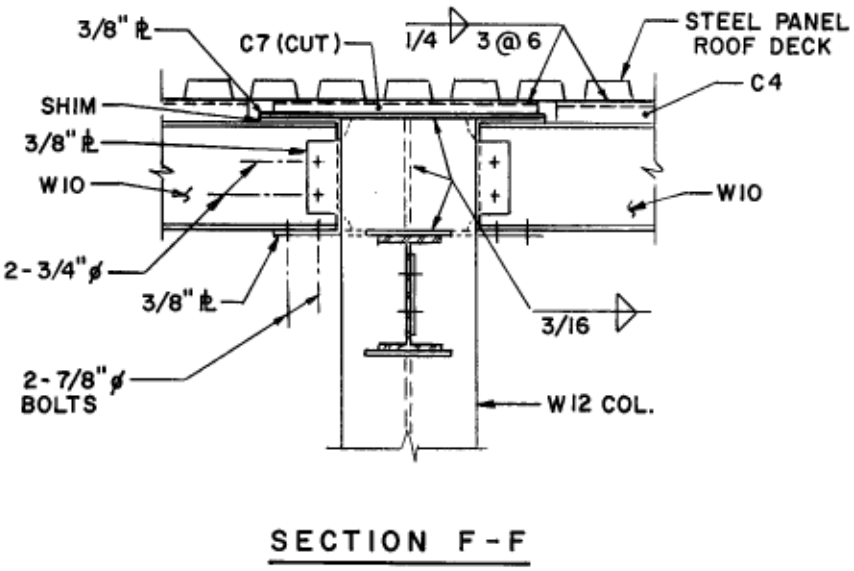

Figure 5-35 Typical Framing Detail at Corner Column 1-D

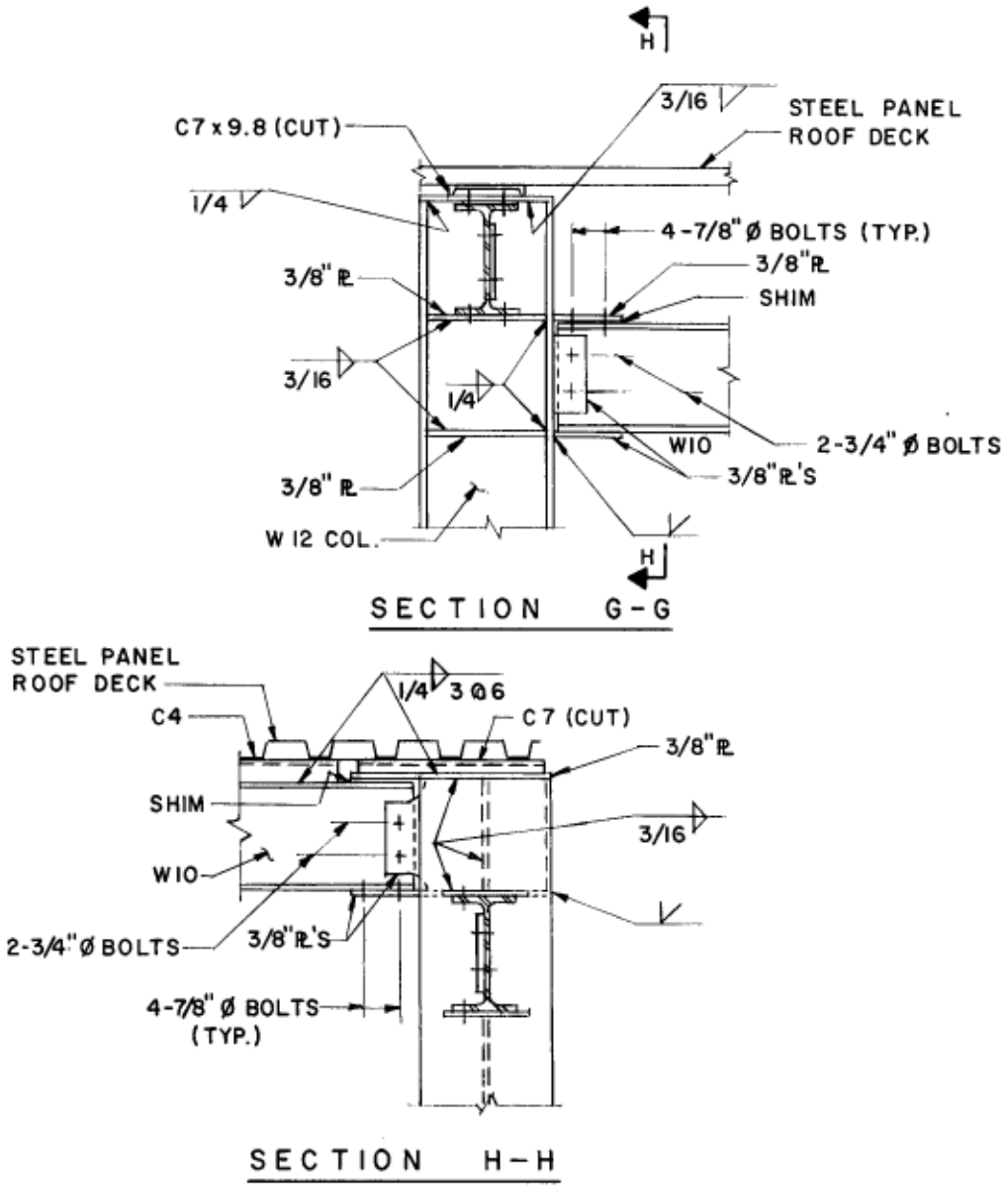

Figure 5-36 Typical Details for Cold-Formed, Light Gage Steel Paneling

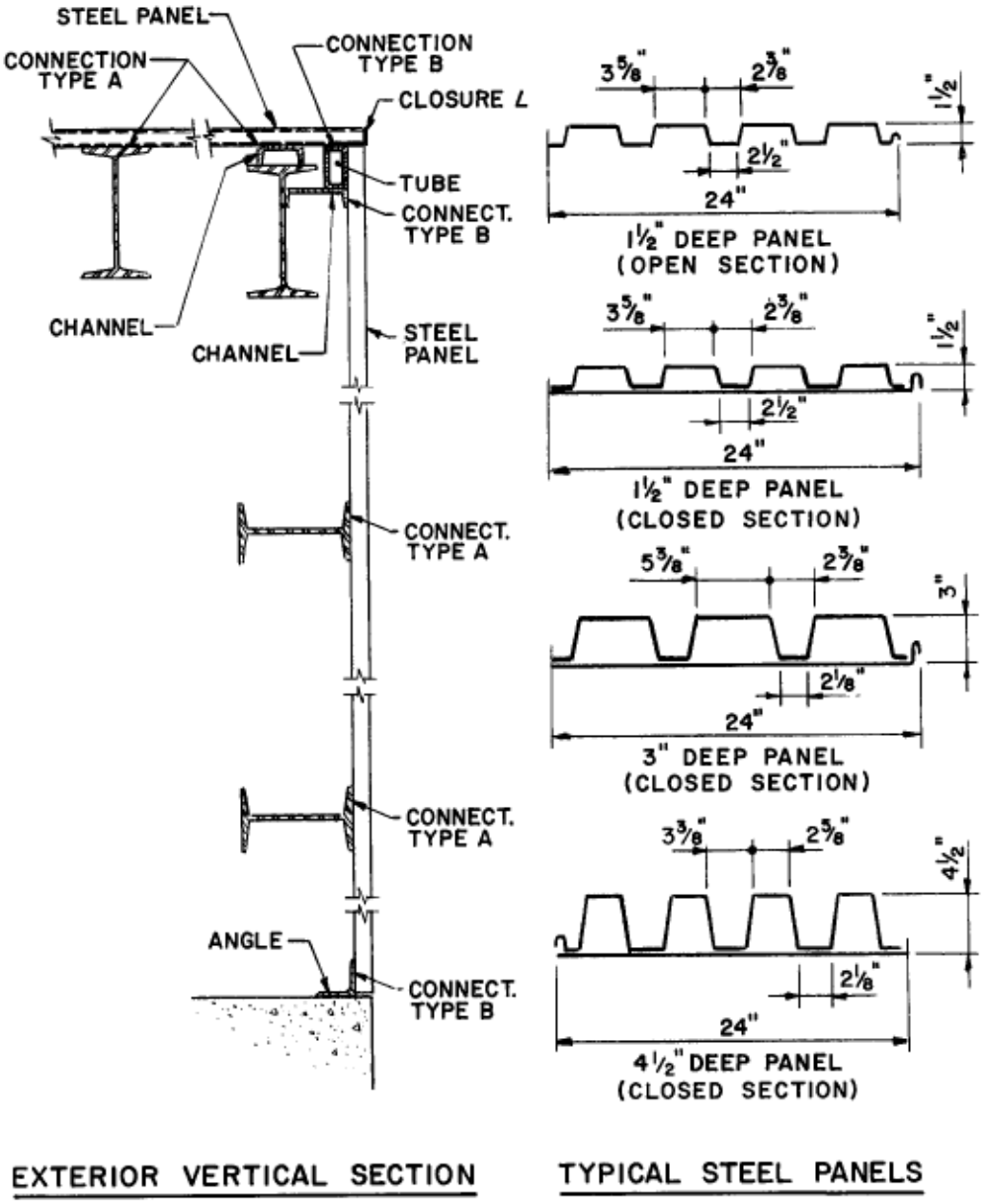

Figure 5-37 Typical Welded Connections for Attaching Cold-Formed Steel Panels to Supporting Members

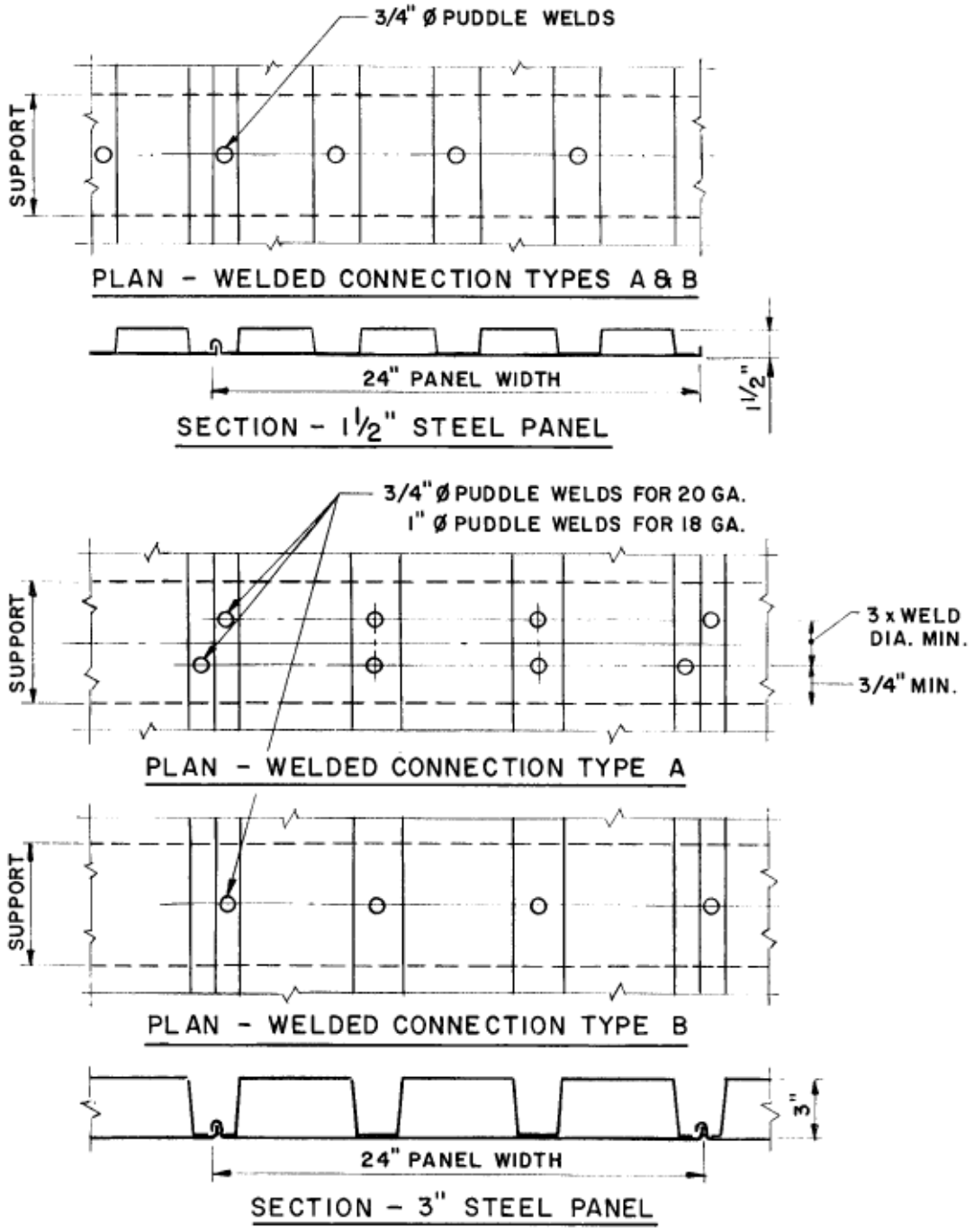

Figure 5-38 Typical Bolted Connections for Attaching Cold-Formed Steel Panels to Supporting Members

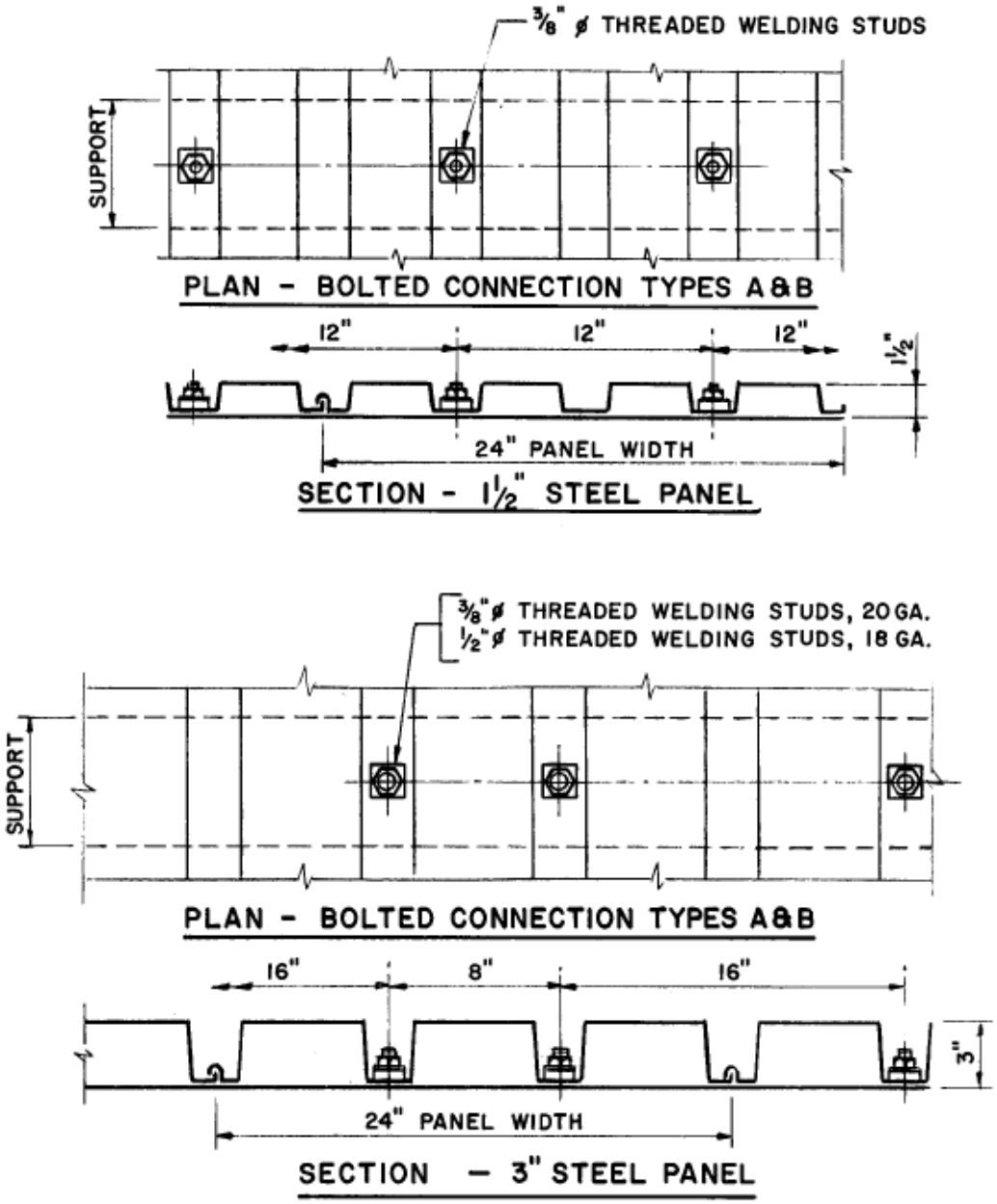

Figure 5-39 Details of Typical Fasteners for Cold-Formed Steel Panels

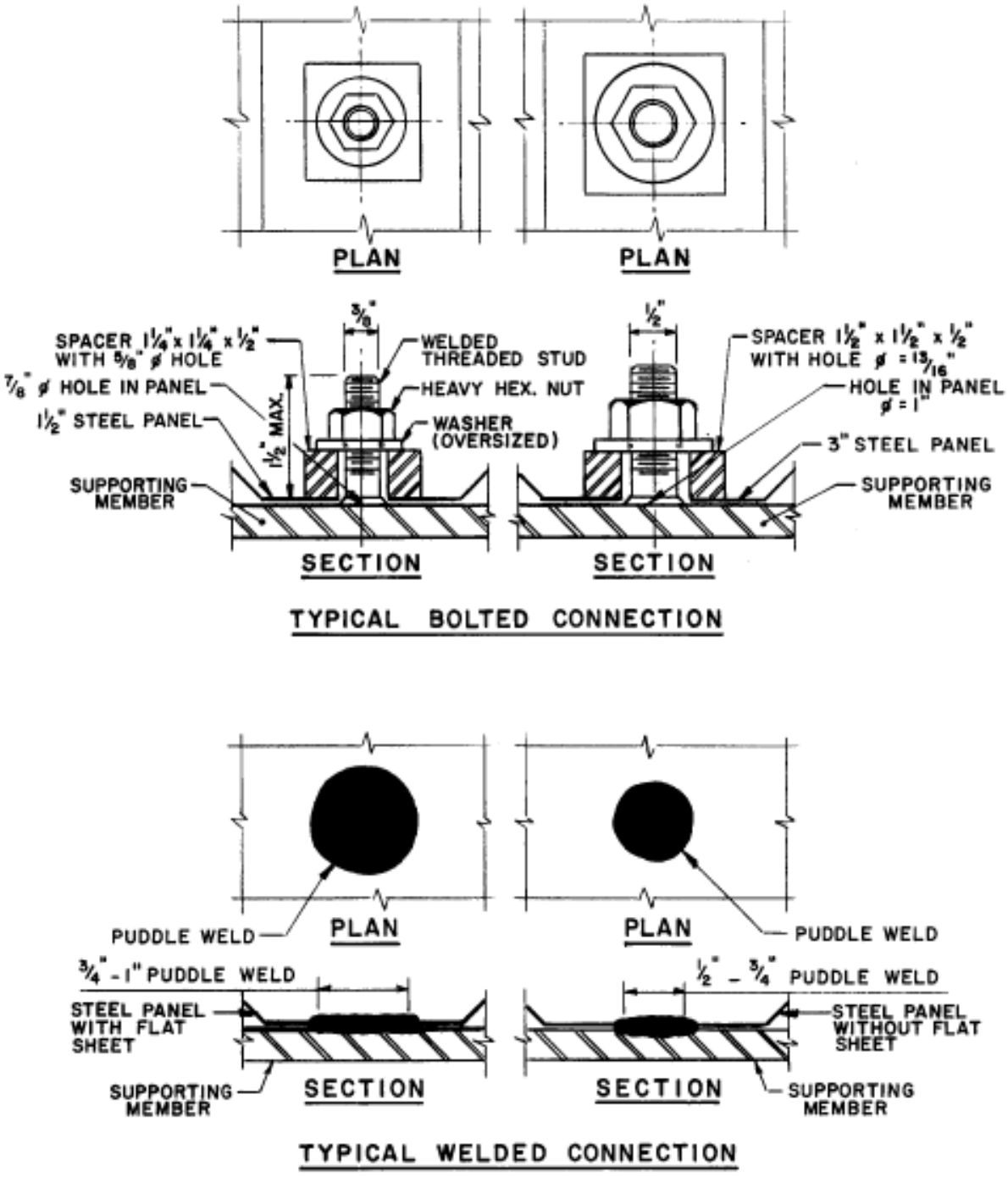

Figure 5-40 Single-Leaf Blast Door Installed in a Steel Structure

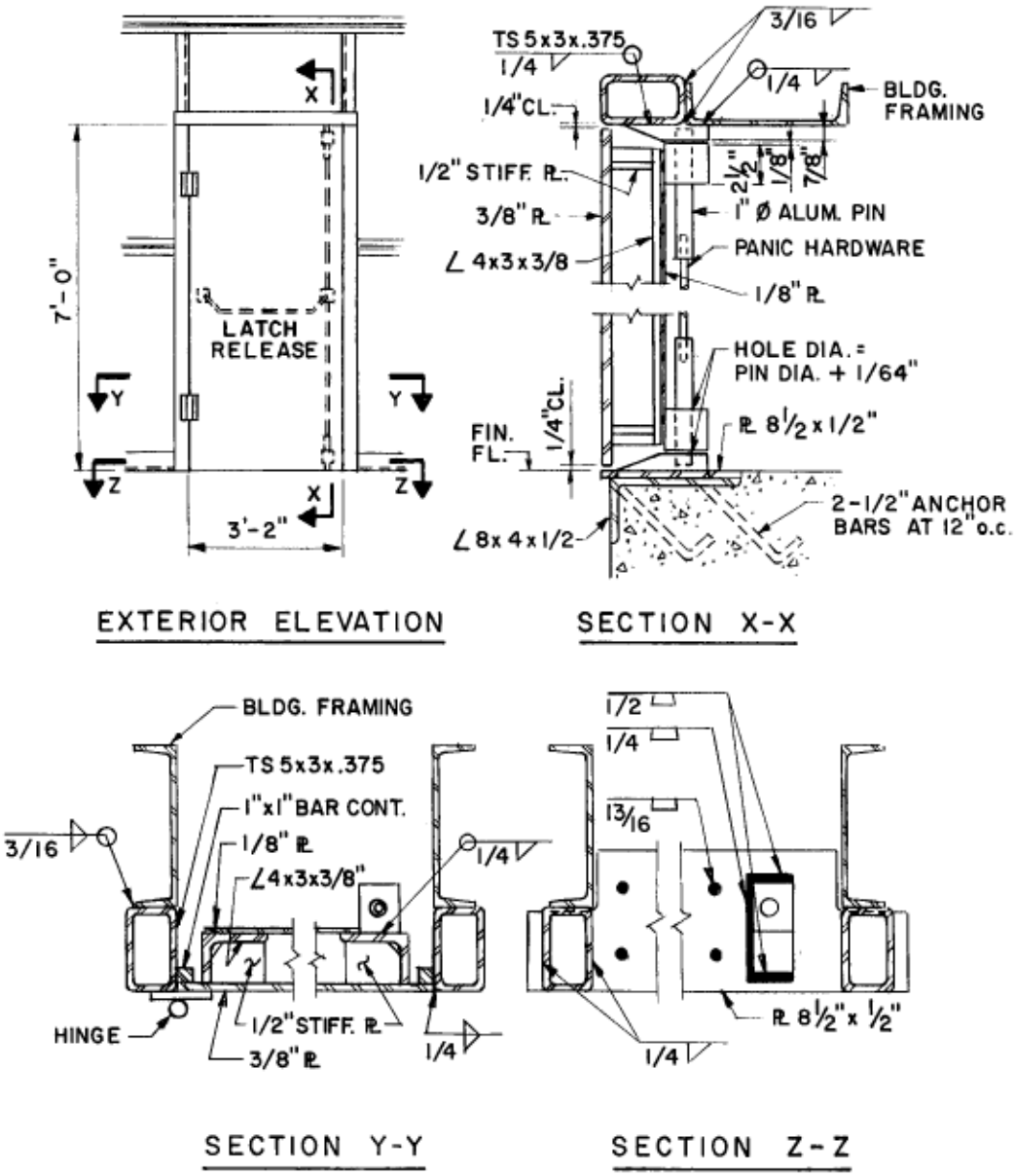

Figure 5-41 Double-Leaf Blast Door Installed in a Concrete Structure

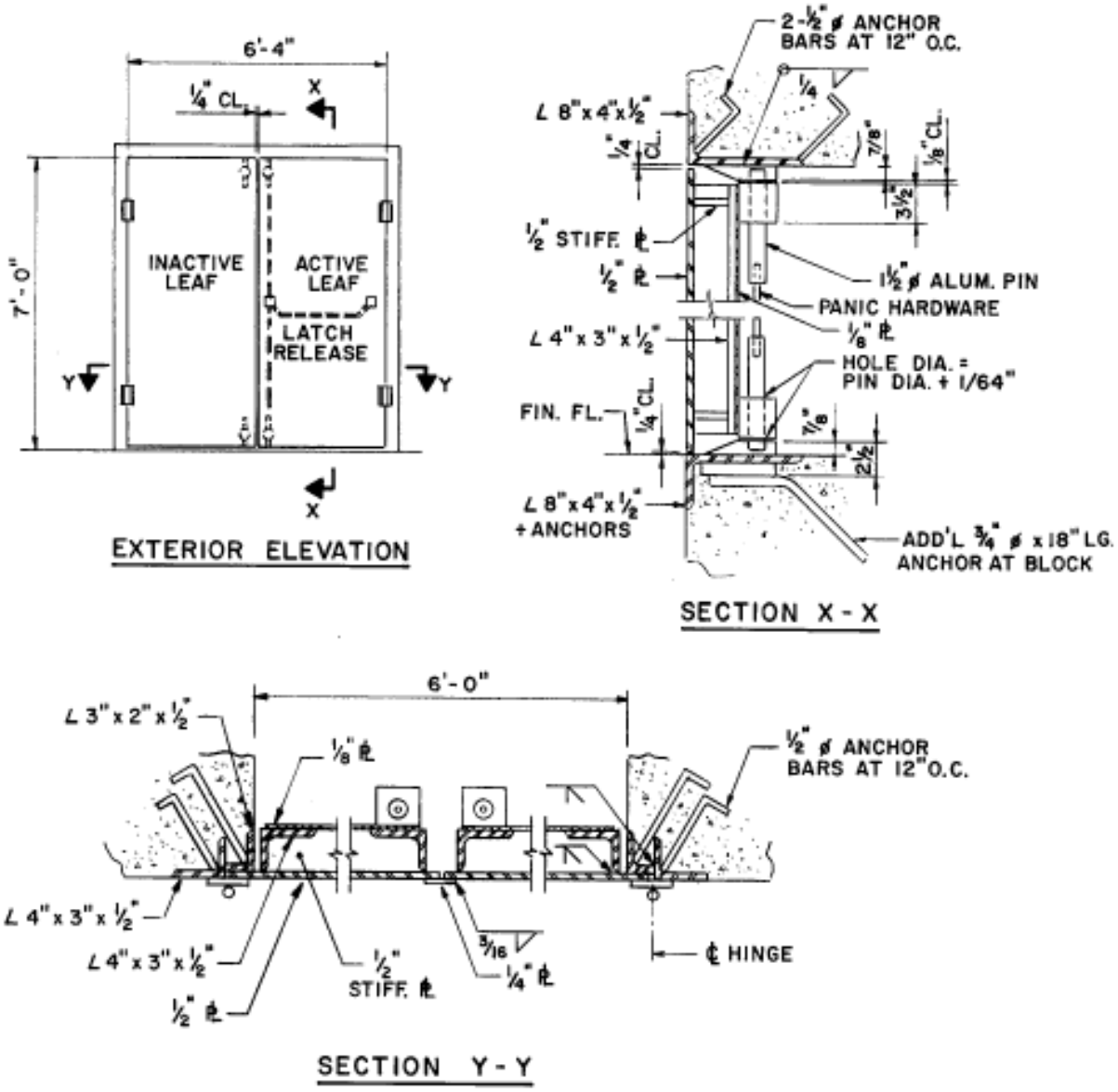
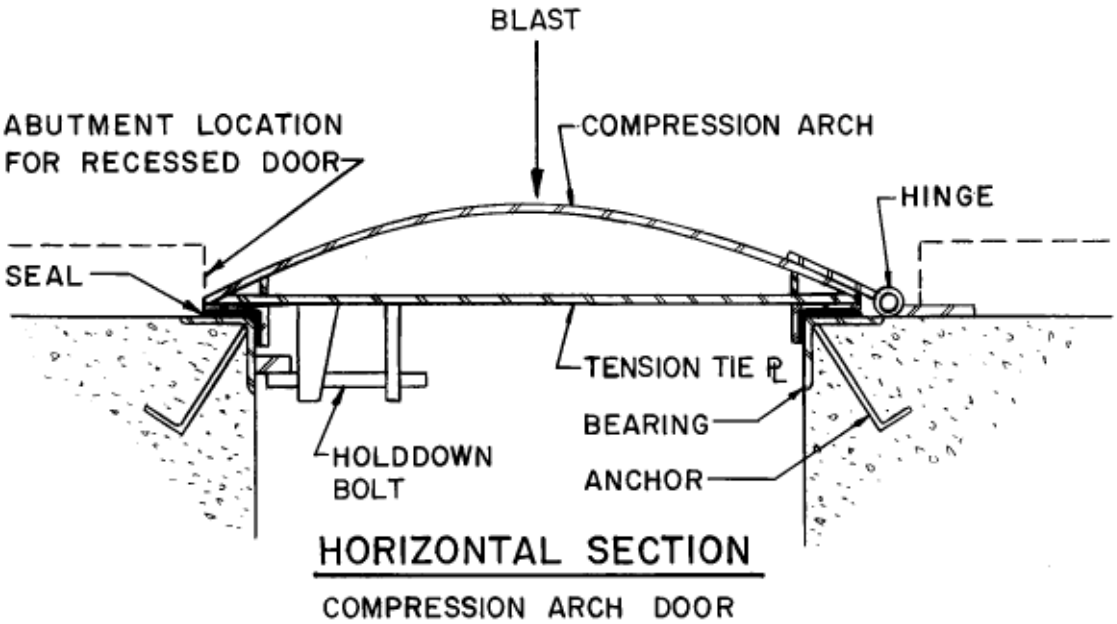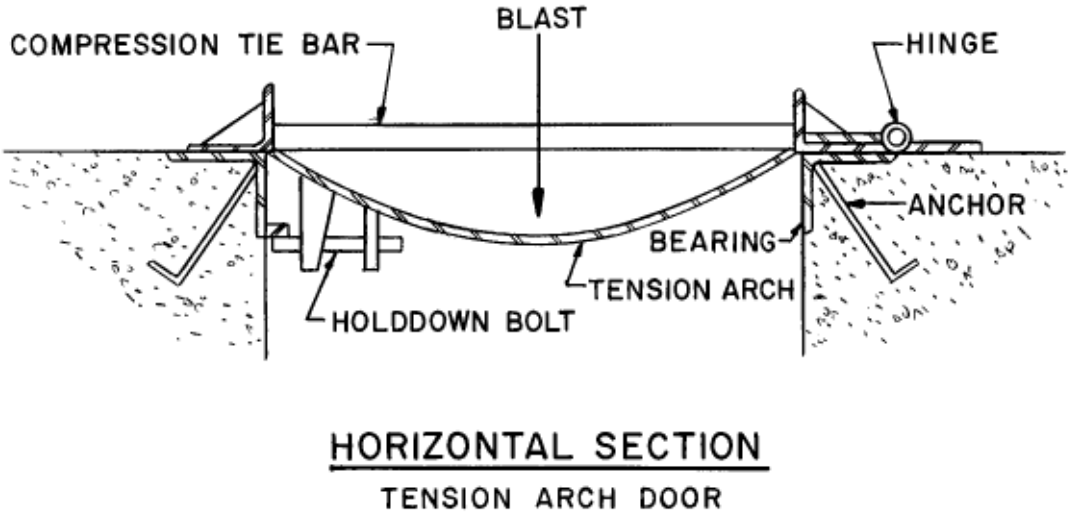
Figure 5-42 Compression-Arch and Tension-Arch Blast Doors